WIRING DIAGRAM

PREVOST

LE MIRAGE 45' BUS

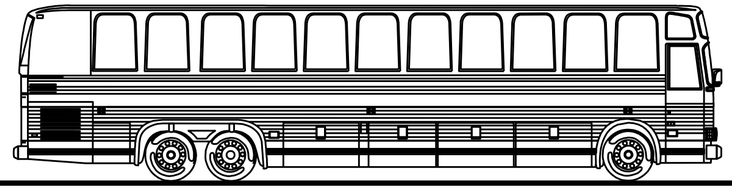

REFERENCE:	STANDARD - MODEL 96-97	NO:	D060872
EFF. W/ OC#	N/A	PRIOR TO / OC#	
EFF. W/ VEH.#	T5666	PRIOR TO / VEH.#	

DR.	SERGE GROLEAU	DATE:	95-07-17
CK.	ROCH CHAMPAGNE	APPR.	ROLAND LAPOINTE

REV.	DATE	DESCRIPTION	PAGE	BY	CK.	APPR.
001	95-07-20	NEW OPTION, POWER 12V OUTLET	A, 1, 18	MJ	kc	R
002	95-08-16	NEW SPEAKER OC# 95037 EFF.W/T5687	C	MJ	kc	R
003	95-09-07	KNEELING ALARM OC# 95060 EFF.W/T5711	C, G2, H, 21	MJ	kc	R
004	95-09-28	SPEED CONTROL MODULE RELOCATED O.C.#94177A EFF. W/T5705	C	S.G.	kc	R
005	95-10-04	CB18 WAS FEED FROM JCT.#58 CHANGED TO JCT.#23 EFF. W/T5711	F,2	S.G.	kc	R
006	95-11-09	TAG AXLE PRESS. SW. WAS N.C. CHANGED TO N.O. - OC#95052 EFF. W/T5781	5	R.C.	kc	R
007	95-11-24	RAD. FAN CLUTCH ACTIVITED WITH A/C OR RETARDER OC#95078 EFF. W/T5711				
		PAGES: A, C, G, I, J, 1, 2, 3, 5, 9, 16, 23	← SEE	MJ	kc	R
008	95-11-28	WORLD TRANSM. HARNESS OC#95124 EFF. W/T5787	C,4	MJ	kc	R
009	96-03-11	NEW OPTION, 8D BATTERY EFF.W/T5858 OC#96013	B1, B2, 1 1/2, 1 2/2	MJ	kc	R
010	96-04-08	NEW SOUND SYSTEM EFF. W/T5884 OC#96007				
		PAGES: A, B1, B2, C, E1, E2, F, G1, G2, G3, I, 1, 2, 28, 29, 30	← SEE	R.C.	kc	R
011	96-04-08	UPDATE	17	MJ	kc	R
012	96-04-08	NEW SPEEDO & TACHY EFF.W/T5890 OC#96014	C, 19	MJ	kc	R
013	96-06-21	WORLD TRANSM. PROGRAMMABLE SPEED SIGNAL OC#96109 EFF. W/V6004	C, G3, 4, 19	R.C.	kc	R
014	96-10-22	NEW OPTION, DIGITAL CLOCK EFF. W/V6104 OC#96158	G1, 9	S.G.	kc	R
015	96-10-26	RESISTOR RUNNING LIGHT CONNECTOR ADDED C510 EFF. W/V6145 OC#96155	G3, 6	S.G.	kc	R
016	96-10-27	UPDATE	B, E2, 7, 12, 21, 28	S.G.	kc	R
017	97-01-21	UPDATE, FRONT DESTINATION SIGN ADDED	G1, G2, 15, 31	MJ	kc	R
		WINDSHIELD WASHER MOTOR ADDED EFF.W/V6175 OC#96125	C, 9	MJ	kc	R
018	97-02-19	NEW OPTION WATER HEATER PRE-HEAT WEBASTO 450000 BTU EFF.W/V6247 OC#97018	G3, 33	S.G.	kc	R
019	97-02-25	UPDATE FAN CLUTCH OVERRIDE	D, G3, 9SP1, 23	S.G.	kc	R
		WIRELESS MICRO RECEIVER ADDED	A, 28, 34	S.G.	kc	R
020	97-04-01	ESPAR TIMER EFF. W/V6253 OC#97022	C, G3, 17	MJ	kc	R
021	97-04-15	NEW A/C FAN CONDENSER EFF.W/V6285 OC#96193	C, F, G3, I, 15, 16	MJ	kc	R

PREVOST LE MIRAGE 45' BUS

NO: D060872 P. 2/2

REV.	DATE	DESCRIPTION	PAGE	BY	CK.	APPR.
022	97-10-23	NEW VOLTAGE REGULATOR EFF.W/W6418 OC#97104	1 1/2, 1 2/2	S.G.	MJ	
023	98-01-14	NEW TRANSMISSION AND ABS EFF.W/W6494 OC#97140	C,D,G,I,3,4,14,19,23,24	S.G.	J.R.	
024	98-02-02	NEW TEMP. SENSOR ON WTEC III EFF.W/W6494 OC#98009	C	MJ	J.R.	
025	98-02-05	NEW WEBASTO TIMER EFF.W/W6503 OC#97154	C, 17	MJ	J.R.	
		UPDATE	4, 20, 28	MJ	J.R.	
026	98-02-10	CHANGE POWER BATTERY CPT. LIGHT EFF. W6527	1, 10	S.G.	MJ	
027	98-02-15	NEW HARNESS ARRANG. SOUND SYS & BACK UP P.A. REMOVED EFF. W6576 OC#97056	G3, 28, 29, 34	MJ	J.R.	
028	98-04-09	UPDATE MIRROR RAMCO	18	S.G.	J.R.	
029	98-08-11	ABS DIFFERENTIEL SENSOR EFF.W/X6686 OC#98075	C, G2/3,	S.G.	J.R.	
		UPDATE	I, 2, 5, 9, 24	S.G.	J.R.	
030	98-08-17	WIRE #90G MOVED BEFORE R-29 RELAY O.C. 98088 EFF. W/W-6681	16	J.R.	J.R.	
031	98-10	RESISTOR ADDED IN SERIAL WITH COIL OF CONDENSER RELAY OC#98112 EFF. X6809	J,16	J.R.	J.R.	
032	98-11	THERMOSTAT BYPASSED ON A/C AUXILIARY UNIT OC#98118 EFF.:S-1624 TO X-6818	16	J.R.	J.R.	
033	98-11	THERMOSTAT & SENSOR REMOVED ON A/C AUXILIARY UNIT OC #98118 EFF. : X-6819	16	J.R.	J.R.	
034	98-11	NEW HAT RACK SPEAKER EFF. W/X6831 OC#98161	C, G3/3, 28	S.G.	J.R.	
035	99-03	INTRODUCTION TWO ALTERNATOR BOSCH EFF. W/X6904 OC#98012	B,C,D,E1/3,E2/3,G2/3 G3/3,H,I,1,2,6,15	S.G.		

INDEX

A	A/C & HEAT SYSTEM	P. 15,16
	A/C AUXILIARY SYSTEM	P. 16
	AIR DRYER	P. 5
	ALARM AND SIGNAL	P. 5
	ABS	P. 24
	ARRANGEMENT - CABLE	P. B
	ARRANGEMENT - HARNESS	P. C
	ARRANGEMENT - SPARE WIRE	P. D
B	BACK-UP ALARM	P. 8
	BACK-UP MONITOR	P. 31
C	CB OPTION	P. 25
	CHARGING SYSTEM	P. 1
	CIGAR LIGHTER	P. 18
	CODE - CIRCUIT NUMBER	P. E
	CODE - CIRCUIT BREAKER	P. F
	CODE - CONNECTOR	P. G
	CODE - DIODE	P. H
	CODE - RELAY	P. I
	CODE - RESISTOR	P. J
	CODE - WIRING KEY	P. K
	CRUISE CONTROL - D.D.E.C.	P. 3
D	D.D.E.C. III	P. 3
	DIFFERENTIAL OIL TEMP.	P. 5
	DIGITAL CLOCK	P. 9
E	ENGINE BLOCK HEATER	P. 14
	ENGINE CONTROL	P. 2
	ENGINE BRAKE SYSTEM	P. 23
	ETHER COLD START	P. 5
	EXTERIOR LIGHTING	P. 6
F	FAN CLUTCH-RADIATOR	P. 5
	FRONT DESTINATION SIGN	P. 31
	FUEL-LOW WARNING LTS	P. 5
	FUEL PRIME PUMP	P. 25
	FUEL WATER FILTER	P. 5
G	GALLEY	P. 26
	GALLEY WITH FRIGO	P. 27
H	HIGH BUOY	P. 21
	HOSTESS CHIME	P. 14
I	INTERIOR LIGHTING	P. 10
K	KNEELING SYSTEM	P. 21
L	LAVATORY	P. 20
	LUGGAGE DOOR LOCK	P. 22
M	MIRROR-RR VIEW ADJUST. & HEATED	P. 18
P	PARKING BRAKE SWITCH	P. 5
	PASSENGER CHIME	P. 14
	PRODRIVER	P. 16
	PYROMETER	P. 25
R	RETARDER (WT)	P. 23
S	SPEEDOMETER (VDO)	P. 19
	SOUND SYSTEM-P.A. ONLY	P. 28
	SOUND SYSTEM-RADIO & P.A.	P. 29
T	TACHOMETER (VDO)	P. 19
	TACHOGRAPH ELECTRONIC	P. 19
	TRANSMISSION MANUAL	P. 25
	TRANSMISSION WORLD	P. 4
V	VIDEO SYSTEM	P. 30
W	WATER HEATER PRE-HEAT	P. 17
	WATER TANK HEATER	P. 14
	WIPER & WASHER WINDSHIELD	P. 9

INDEX

A
- A/C & HEAT SYSTEM P. 15,16
- A/C AUXILIARY SYSTEM P. 16
- AIR DRYER P. 5
- ALARM AND SIGNAL P. 5
- ABS P. 24
- ARRANGEMENT - CABLE P. B
- ARRANGEMENT - HARNESS P. C
- ARRANGEMENT - SPARE WIRE P. D

B
- BACK-UP ALARM P. 8
- BACK-UP MONITOR P. 31

C
- CB OPTION P. 25
- CHARGING SYSTEM P. 1
- CIGAR LIGHTER P. 18
- CODE - CIRCUIT NUMBER P. E
- CODE - CIRCUIT BREAKER P. F
- CODE - CONNECTOR P. G
- CODE - DIODE P. H
- CODE - RELAY P. I
- CODE - RESISTOR P. J
- CODE - WIRING KEY P. K
- CRUISE CONTROL - D.D.E.C. P. 3

D
- D.D.E.C. III P. 3
- DIFFERENTIAL OIL TEMP. P. 5
- DIGITAL CLOCK P. 9

E
- ENGINE BLOCK HEATER P. 14
- ENGINE CONTROL P. 2
- ENGINE BRAKE SYSTEM P. 23
- ETHER COLD START P. 5
- EXTERIOR LIGHTING P. 6

F
- FAN CLUTCH-RADIATOR P. 5
- FRONT DESTINATION SIGN P. 31
- FUEL-LOW WARNING LTS P. 5
- FUEL PRIME PUMP P. 25
- FUEL WATER FILTER P. 5

G
- GALLEY P. 26
- GALLEY WITH FRIGO P. 27

H
- HIGH BUOY P. 21
- HOSTESS CHIME P. 14

I
- INTERIOR LIGHTING P. 10

K
- KNEELING SYSTEM P. 21

L
- LAVATORY P. 20
- LUGGAGE DOOR LOCK P. 22

M
- MIRROR-RR VIEW ADJUST. & HEATED P. 18

P
- PARKING BRAKE SWITCH P. 5
- PASSENGER CHIME P. 14
- POWER 12V OUTLET P. 18
- PRODRIVER P. 16
- PYROMETER P. 25

R
- RETARDER (WT) P. 23

S
- SPEEDOMETER (VDO) P. 19
- SOUND SYSTEM-P.A. ONLY P. 28
- SOUND SYSTEM-RADIO & P.A. P. 29

T
- TACHOMETER (VDO) P. 19
- TACHOGRAPH ELECTRONIC P. 19
- TRANSMISSION MANUAL P. 25
- TRANSMISSION WORLD P. 4

V
- VIDEO SYSTEM P. 30

W
- WATER HEATER PRE-HEAT P. 17
- WATER TANK HEATER P. 14
- WIPER & WASHER WINDSHIELD P. 9

INDEX

A
- A/C & HEAT SYSTEM P. 15,16
- A/C AUXILIARY SYSTEM P. 16
- AIR DRYER P. 5
- ALARM AND SIGNAL P. 5
- ABS P. 24
- ARRANGEMENT - CABLE P. B
- ARRANGEMENT - HARNESS P. C
- ARRANGEMENT - SPARE WIRE P. D

B
- BACK-UP ALARM P. 8
- BACK-UP MONITOR P. 31

C
- CB OPTION P. 25
- CHARGING SYSTEM P. 1
- CIGAR LIGHTER P. 18
- CODE - CIRCUIT NUMBER P. E
- CODE - CIRCUIT BREAKER P. F
- CODE - CONNECTOR P. G
- CODE - DIODE P. H
- CODE - RELAY P. I
- CODE - RESISTOR P. J
- CODE - WIRING KEY P. K
- CRUISE CONTROL - D.D.E.C. P. 3

D
- D.D.E.C. III P. 3
- DIFFERENTIAL OIL TEMP. P. 5
- DIGITAL CLOCK P. 9

E
- ENGINE BLOCK HEATER P. 14
- ENGINE CONTROL P. 2
- ENGINE BRAKE SYSTEM P. 23
- ETHER COLD START P. 5
- EXTERIOR LIGHTING P. 6

F
- FAN CLUTCH-RADIATOR P. 9
- FRONT DESTINATION SIGN P. 31
- FUEL-LOW WARNING LTS P. 5
- FUEL PRIME PUMP P. 25
- FUEL WATER FILTER P. 5

G
- GALLEY P. 26
- GALLEY WITH FRIGO P. 27

H
- HIGH BUOY P. 21
- HOSTESS CHIME P. 14

I
- INTERIOR LIGHTING P. 10

K
- KNEELING SYSTEM P. 21

L
- LAVATORY P. 20
- LUGGAGE DOOR LOCK P. 22

M
- MIRROR-RR VIEW ADJUST. & HEATED P. 18

P
- PARKING BRAKE SWITCH P. 5
- PASSENGER CHIME P. 14
- POWER 12V OUTLET P. 18
- PRODRIVER P. 16
- PYROMETER P. 25

R
- RETARDER (WT) P. 23

S
- SPEEDOMETER (VDO) P. 19
- SOUND SYSTEM-P.A. ONLY P. 28
- SOUND SYSTEM-RADIO & P.A. P. 29

T
- TACHOMETER (VDO) P. 19
- TACHOGRAPH ELECTRONIC P. 19
- TRANSMISSION MANUAL P. 25
- TRANSMISSION WORLD P. 4

V
- VIDEO SYSTEM P. 30

W
- WATER HEATER PRE-HEAT P. 17
- WATER TANK HEATER P. 14
- WIPER & WASHER WINDSHIELD P. 9

INDEX

A
- A/C & HEAT SYSTEM P. 15,16
- A/C AUXILIARY SYSTEM P. 16
- AIR DRYER P. 5
- ALARM AND SIGNAL P. 5
- ABS P. 24
- ARRANGEMENT - CABLE P. B
- ARRANGEMENT - HARNESS P. C
- ARRANGEMENT - SPARE WIRE P. D

B
- BACK-UP ALARM P. 8
- BACK-UP MONITOR P. 31

C
- CB OPTION P. 25
- CHARGING SYSTEM P. 1
- CIGAR LIGHTER P. 18
- CODE - CIRCUIT NUMBER P. E
- CODE - CIRCUIT BREAKER P. F
- CODE - CONNECTOR P. G
- CODE - DIODE P. H
- CODE - RELAY P. I
- CODE - RESISTOR P. J
- CODE - WIRING KEY P. K
- CRUISE CONTROL - D.D.E.C. P. 3

D
- D.D.E.C. III P. 3
- DIFFERENTIAL OIL TEMP. P. 5
- DIGITAL CLOCK P. 9

E
- ENGINE BLOCK HEATER P. 14
- ENGINE CONTROL P. 2
- ENGINE BRAKE SYSTEM P. 23
- ETHER COLD START P. 5
- EXTERIOR LIGHTING P. 6

F
- FAN CLUTCH-RADIATOR P. 9
- FRONT DESTINATION SIGN P. 31
- FUEL-LOW WARNING LTS P. 5
- FUEL PRIME PUMP P. 25
- FUEL WATER FILTER P. 5

G
- GALLEY P. 26
- GALLEY WITH FRIGO P. 27

H
- HIGH BUOY P. 21
- HOSTESS CHIME P. 14

I
- INTERIOR LIGHTING P. 10

K
- KNEELING SYSTEM P. 21

L
- LAVATORY P. 20
- LUGGAGE DOOR LOCK P. 22

M
- MIRROR-RR VIEW ADJUST. & HEATED P. 18

P
- PARKING BRAKE SWITCH P. 5
- PASSENGER CHIME P. 14
- POWER 12V OUTLET P. 18
- PRODRIVER P. 16
- PYROMETER P. 25

R
- RETARDER (WT) P. 23

S
- SPEEDOMETER (VDO) P. 19
- SOUND SYSTEM-RADIO P. 28

T
- TACHOMETER (VDO) P. 19
- TACHOGRAPH ELECTRONIC P. 19
- TRANSMISSION MANUAL P. 25
- TRANSMISSION WORLD P. 4

V
- VIDEO SYSTEM P. 29
- VIDEO SYSTEM & TV RECEIVER P. 30

W
- WATER HEATER PRE-HEAT P. 17
- WATER TANK HEATER P. 14
- WIPER & WASHER WINDSHIELD P. 9

INDEX

A
- A/C & HEAT SYSTEM P. 15,16
- A/C AUXILIARY SYSTEM P. 16
- AIR DRYER P. 5
- ALARM AND SIGNAL P. 5
- ABS P. 24
- ARRANGEMENT - CABLE P. B
- ARRANGEMENT - HARNESS P. C
- ARRANGEMENT - SPARE WIRE P. D

B
- BACK-UP ALARM P. 8
- BACK-UP MONITOR P. 31

C
- CB OPTION P. 25
- CHARGING SYSTEM P. 1
- CIGAR LIGHTER P. 18
- CODE - CIRCUIT NUMBER P. E
- CODE - CIRCUIT BREAKER P. F
- CODE - CONNECTOR P. G
- CODE - DIODE P. H
- CODE - RELAY P. I
- CODE - RESISTOR P. J
- CODE - WIRING KEY P. K
- CRUISE CONTROL - D.D.E.C. P. 3

D
- D.D.E.C. III P. 3
- DIFFERENTIAL OIL TEMP. P. 5
- DIGITAL CLOCK P. 9

E
- ENGINE BLOCK HEATER P. 14
- ENGINE CONTROL P. 2
- ENGINE BRAKE SYSTEM P. 23
- ETHER COLD START P. 5
- EXTERIOR LIGHTING P. 6

F
- FAN CLUTCH-RADIATOR P. 9
- FRONT DESTINATION SIGN P. 31
- FUEL-LOW WARNING LTS P. 5
- FUEL PRIME PUMP P. 25
- FUEL WATER FILTER P. 5

G
- GALLEY P. 26
- GALLEY WITH FRIGO P. 27

H
- HIGH BUOY P. 21
- HOSTESS CHIME P. 14

I
- INTERIOR LIGHTING P. 10

K
- KNEELING SYSTEM P. 21

L
- LAVATORY P. 20
- LUGGAGE DOOR LOCK P. 22

M
- MIRROR-RR VIEW ADJUST. & HEATED P. 18

P
- PARKING BRAKE SWITCH P. 5
- PASSENGER CHIME P. 14
- POWER 12V OUTLET P. 18
- PRODRIVER P. 16
- PYROMETER P. 25

R
- RETARDER (WT) P. 23

S
- SPEEDOMETER (VDO) P. 19
- SOUND SYSTEM-RADIO P. 28

T
- TACHOMETER (VDO) P. 19
- TACHOGRAPH ELECTRONIC P. 19
- TRANSMISSION MANUAL P. 25
- TRANSMISSION WORLD P. 4

V
- VIDEO SYSTEM P. 29
- VIDEO SYSTEM & TV RECEIVER P. 30

W
- WATER HEATER PRE-HEAT P. 17,33
- WATER TANK HEATER P. 14
- WIPER & WASHER WINDSHIELD P. 9
- WIRELESS MICRO RECEIVER P. 34

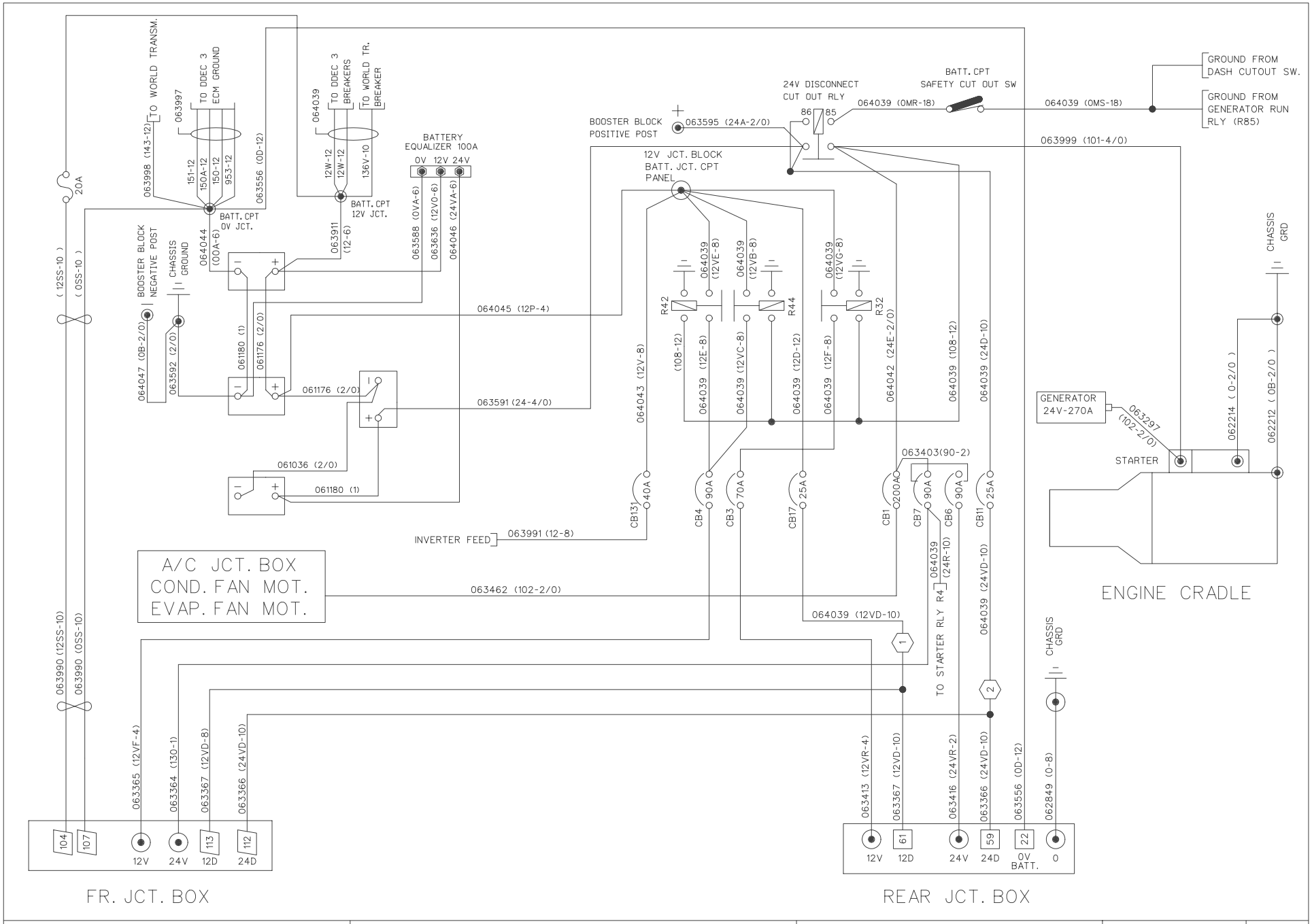

PREVOST CAR inc.	WIRING DIAGRAM	NO: D060872	P.B	REVISION 000

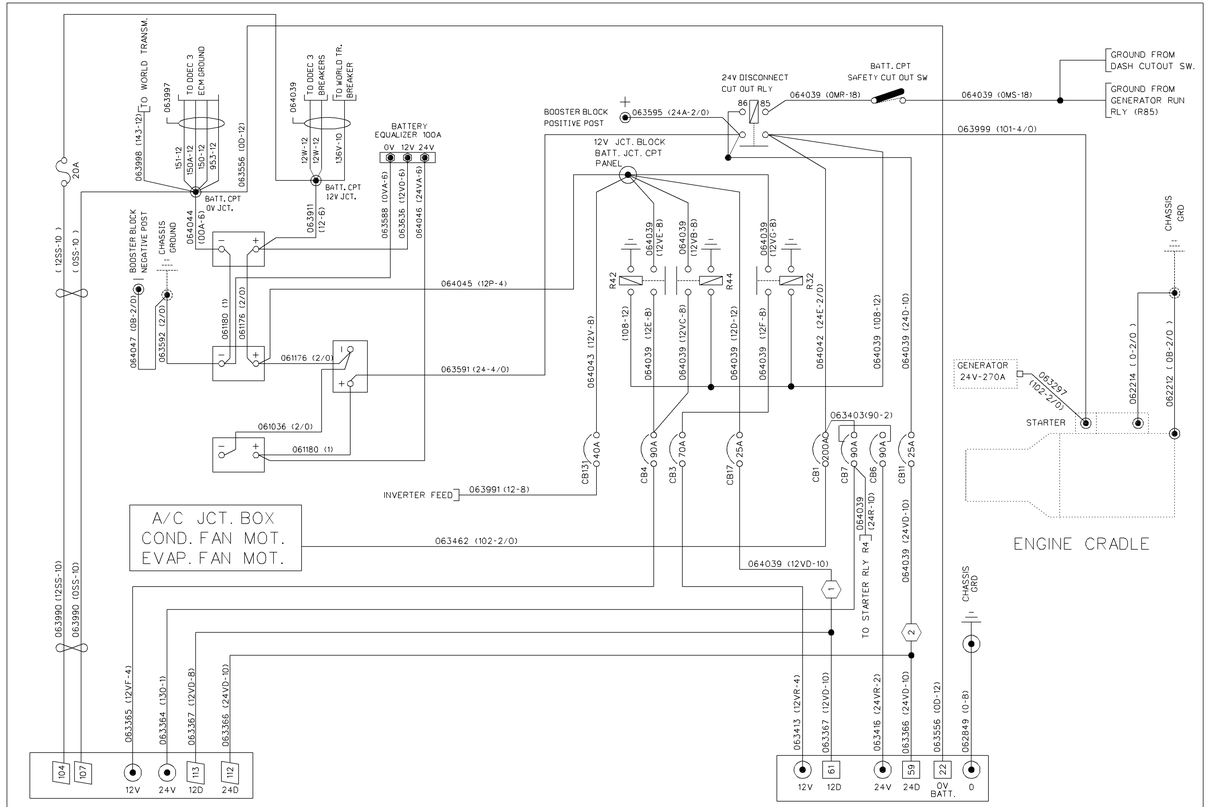

PREVOST CAR inc.	WIRING DIAGRAM	NO: D060872	P.B 1/2	REVISION 009

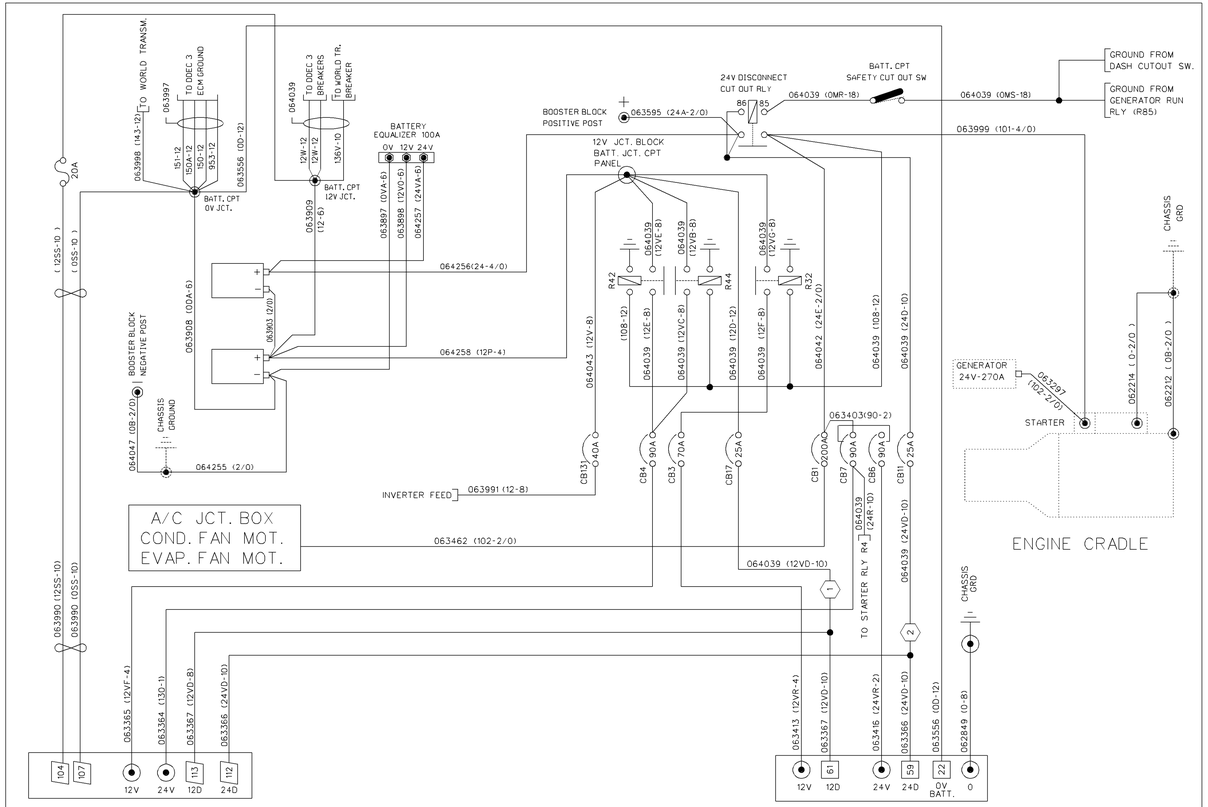

PREVOST CAR inc.	WIRING DIAGRAM	NO: D060872	P.B 2/2	REVISION 009

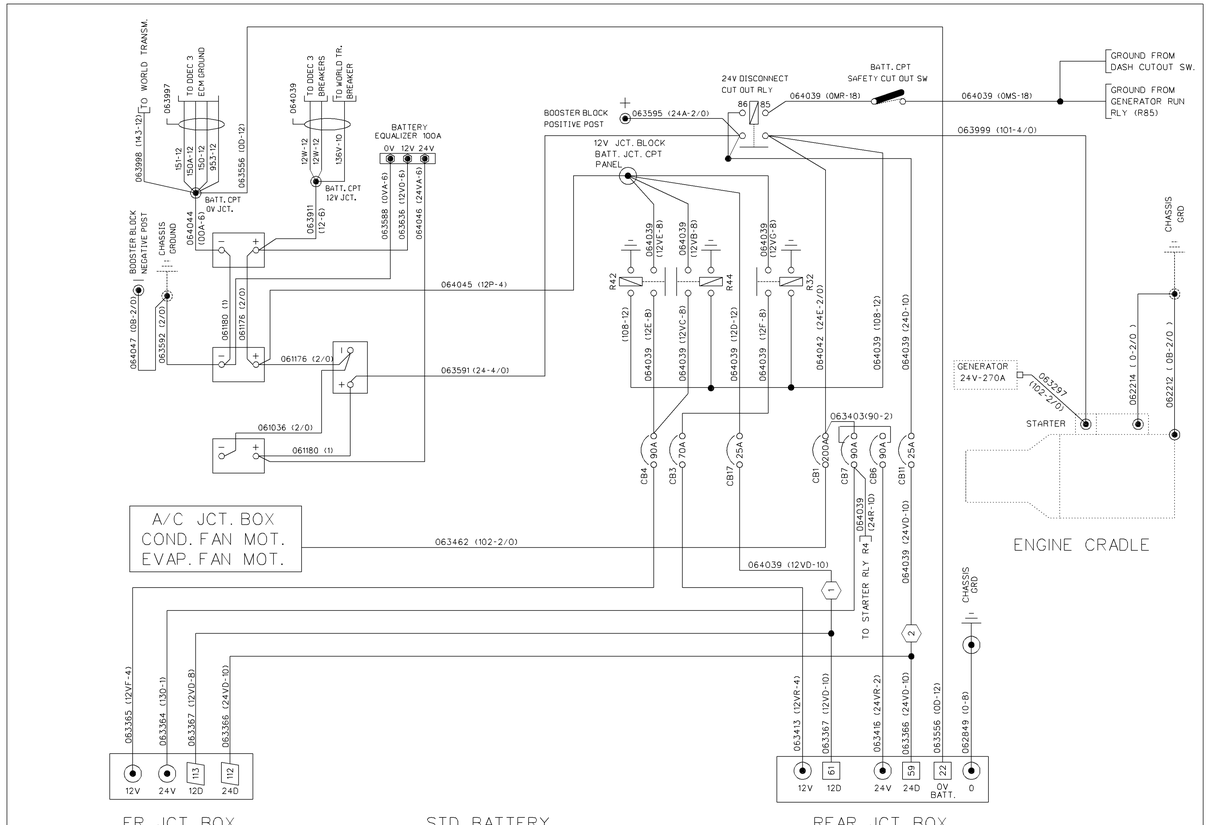

PREVOST CAR inc.	WIRING DIAGRAM	NO: D060872	P.B 1/2	REVISION 010

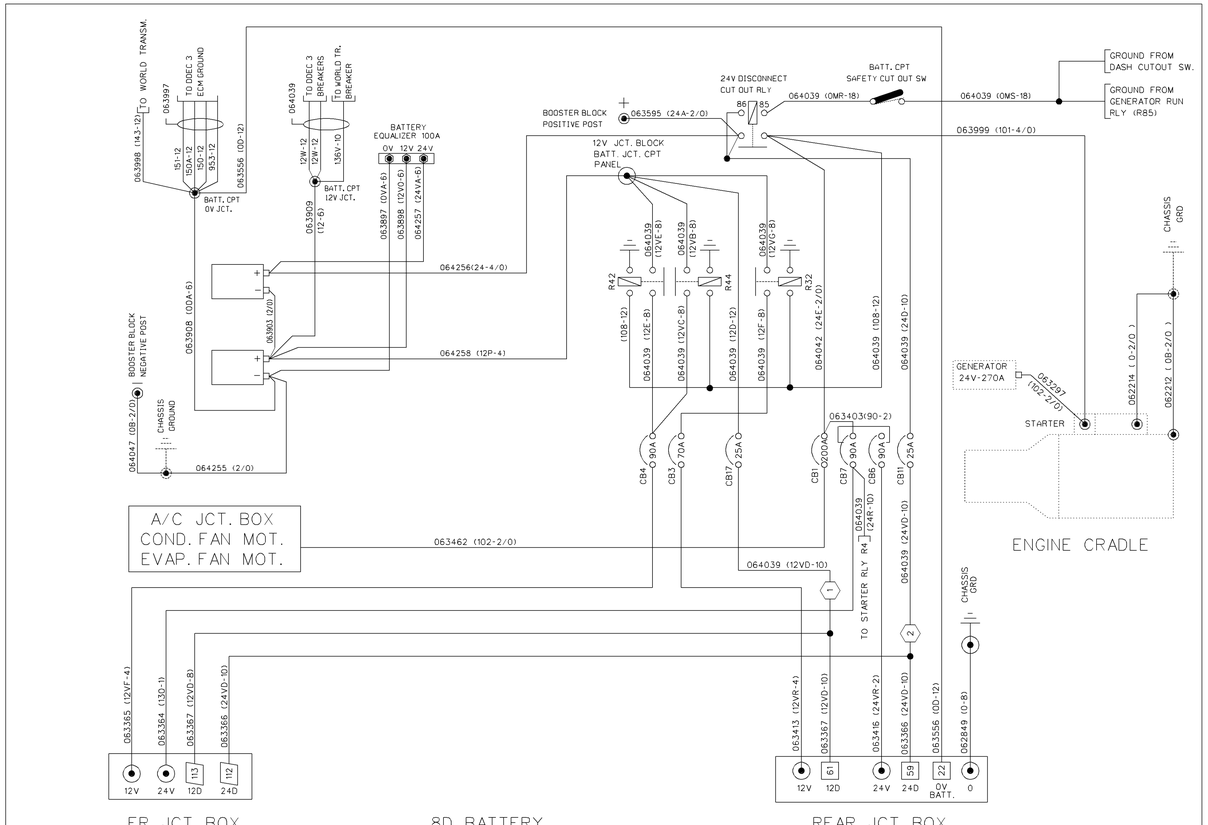

PREVOST CAR inc.	WIRING DIAGRAM	NO: D060872	P.B 2/2	REVISION 010

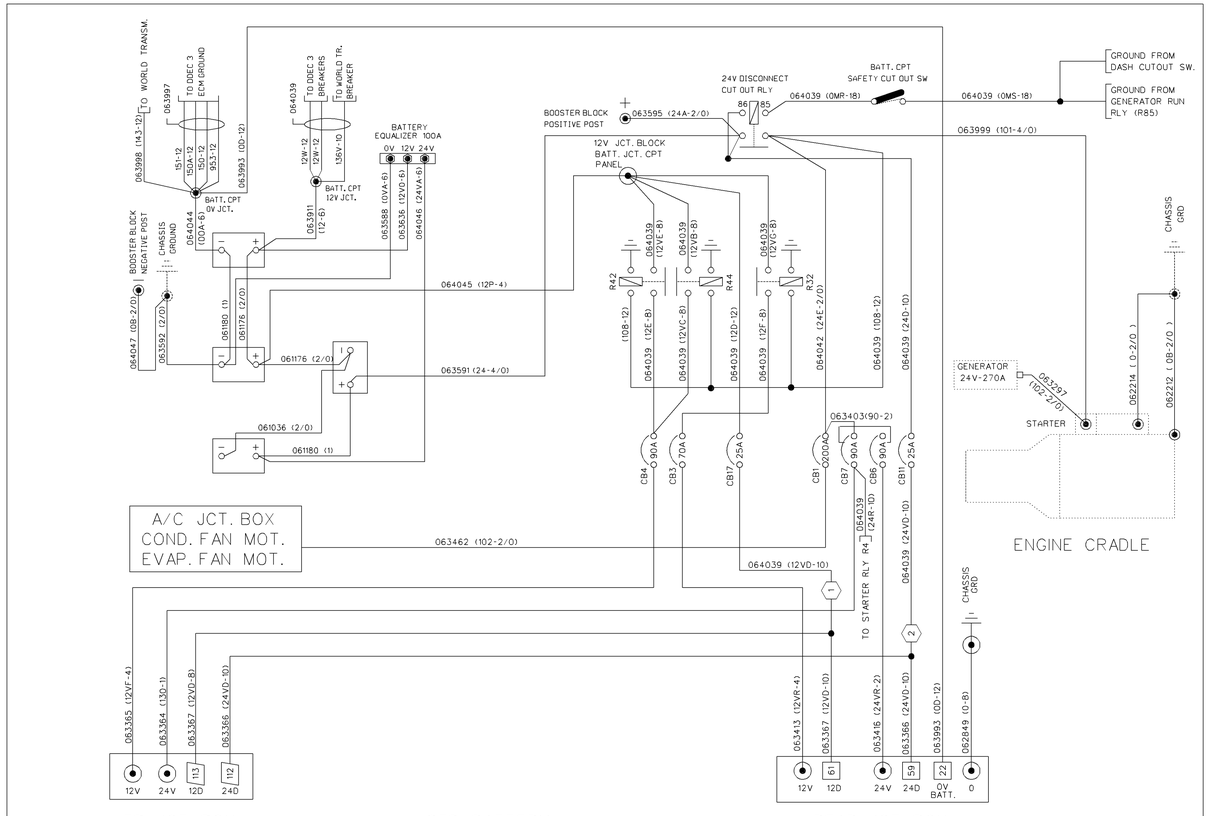

PREVOST CAR inc.	WIRING DIAGRAM	NO: D060872	P.B 1/2	REVISION 016

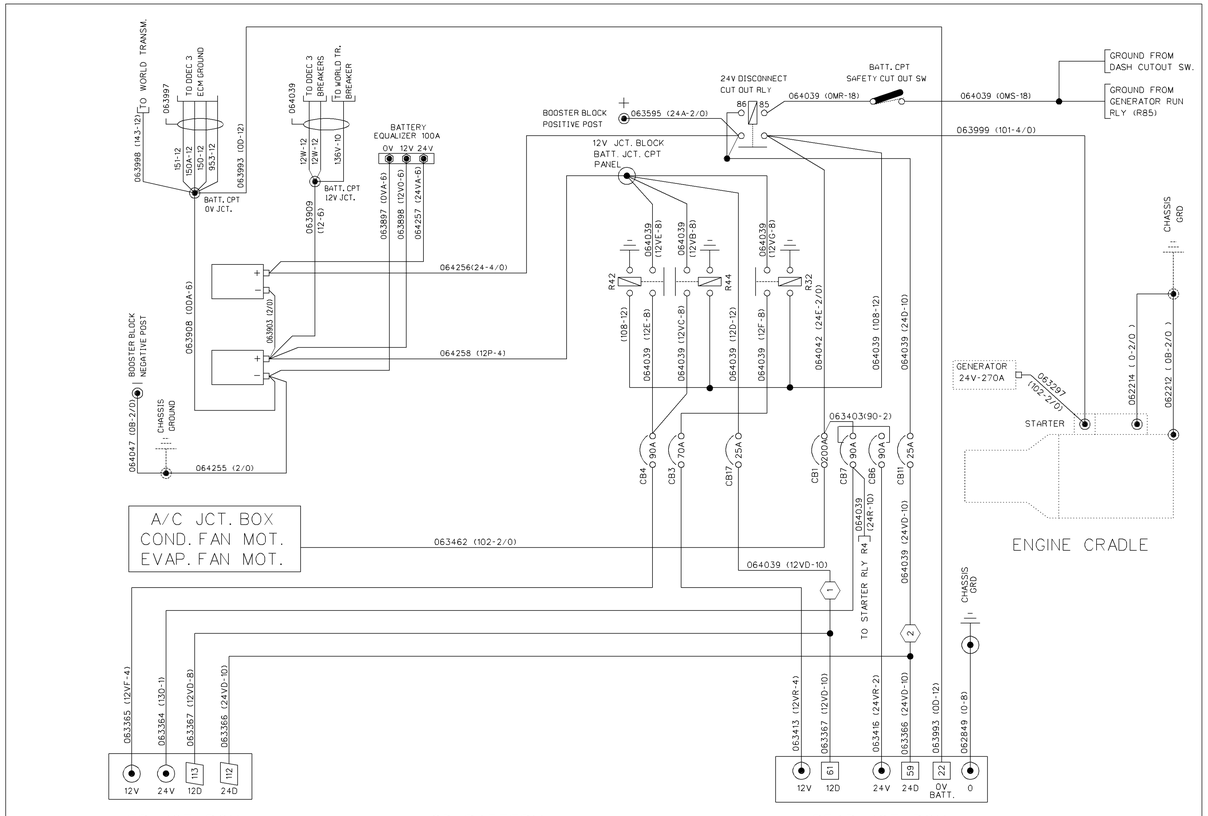

PREVOST CAR inc.	WIRING DIAGRAM	NO: D060872	P.B 2/2	REVISION 016

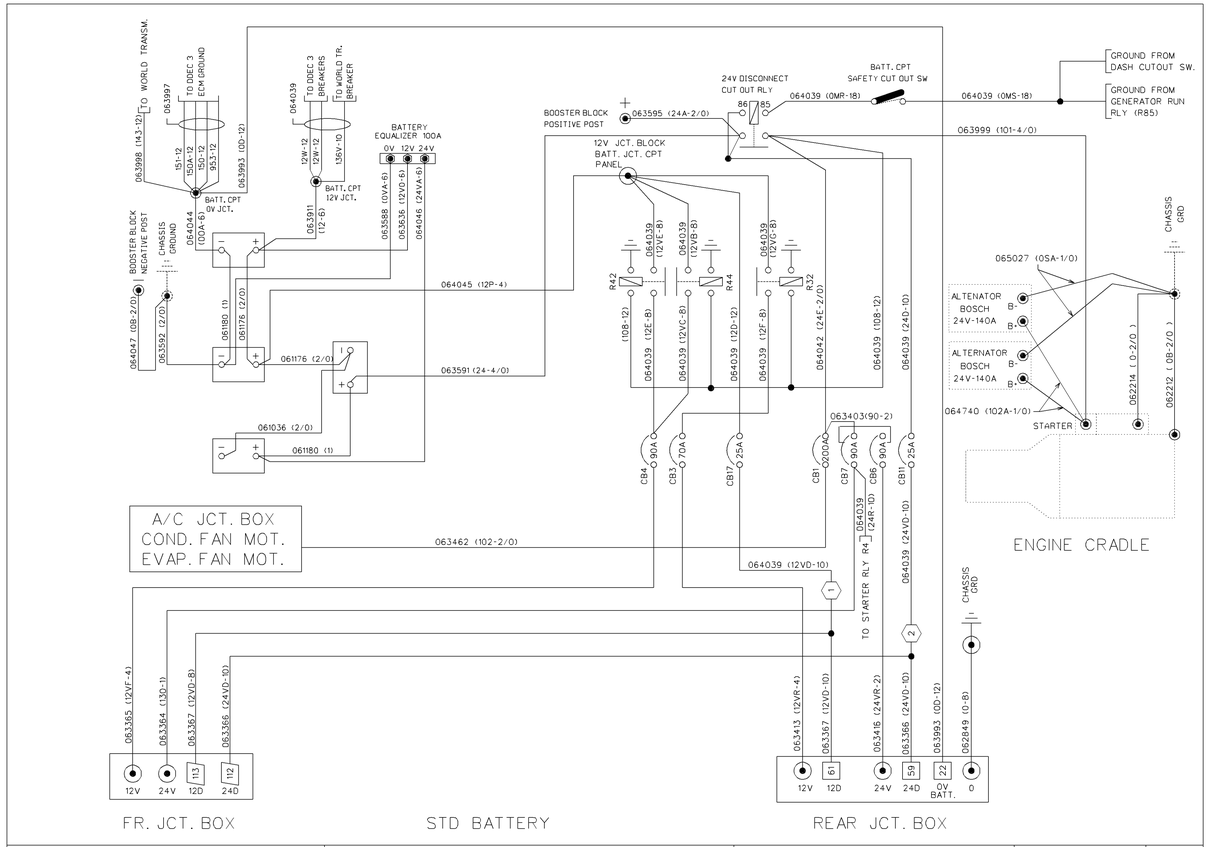

PREVOST CAR inc.	WIRING DIAGRAM	NO: D060872	P.B 1/2	REVISION 035

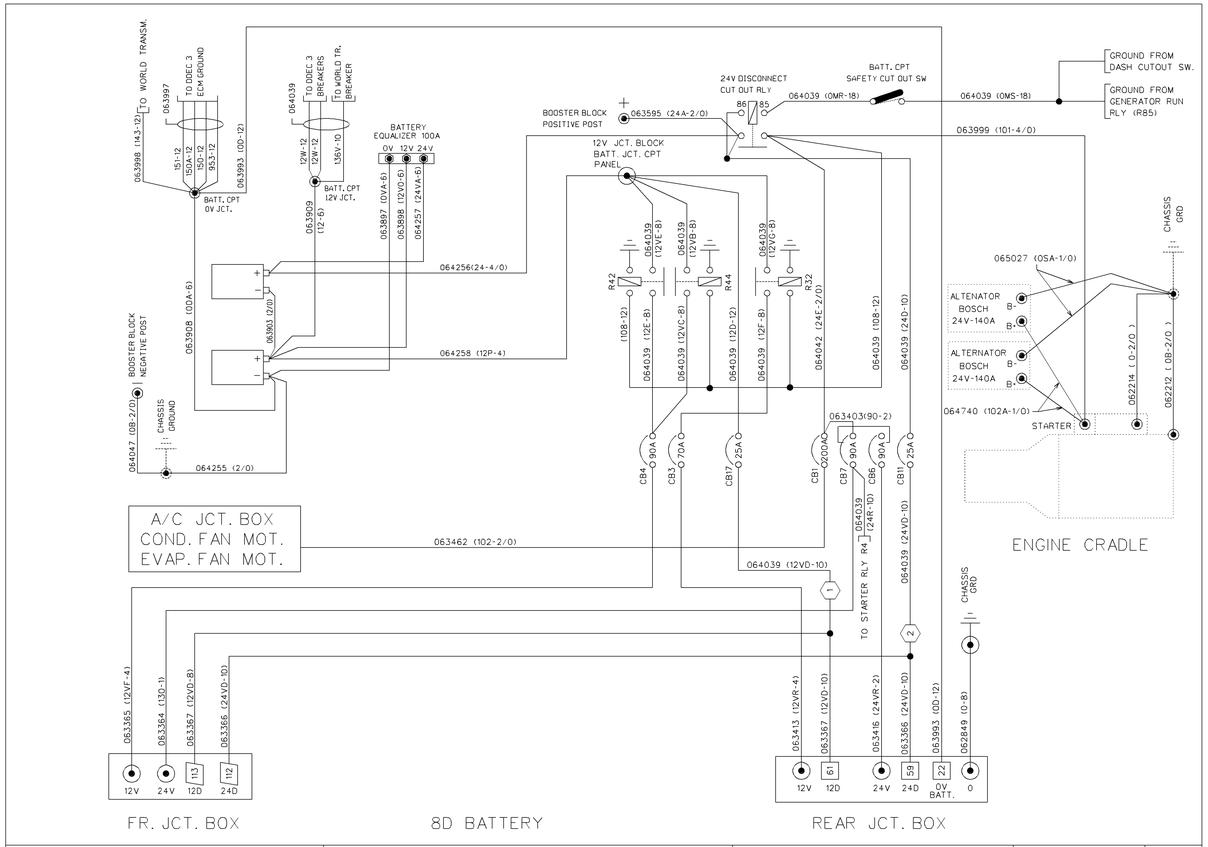

PREVOST CAR inc.	WIRING DIAGRAM	NO: D060872	P.B 2/2	REVISION 035

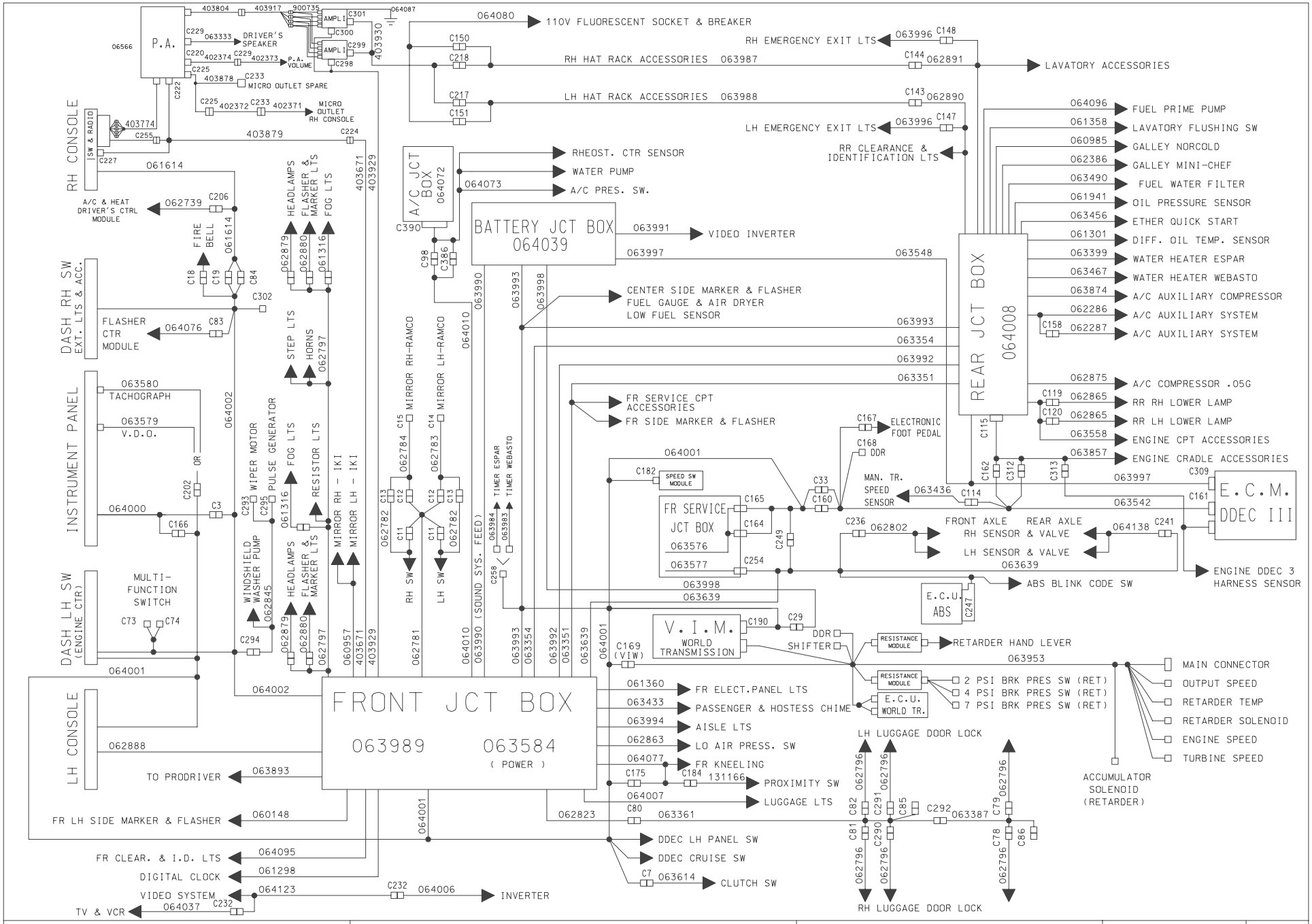

PREVOST CAR inc.	WIRING DIAGRAM	NO: D060872	P.C PRIOR	REVISION 000

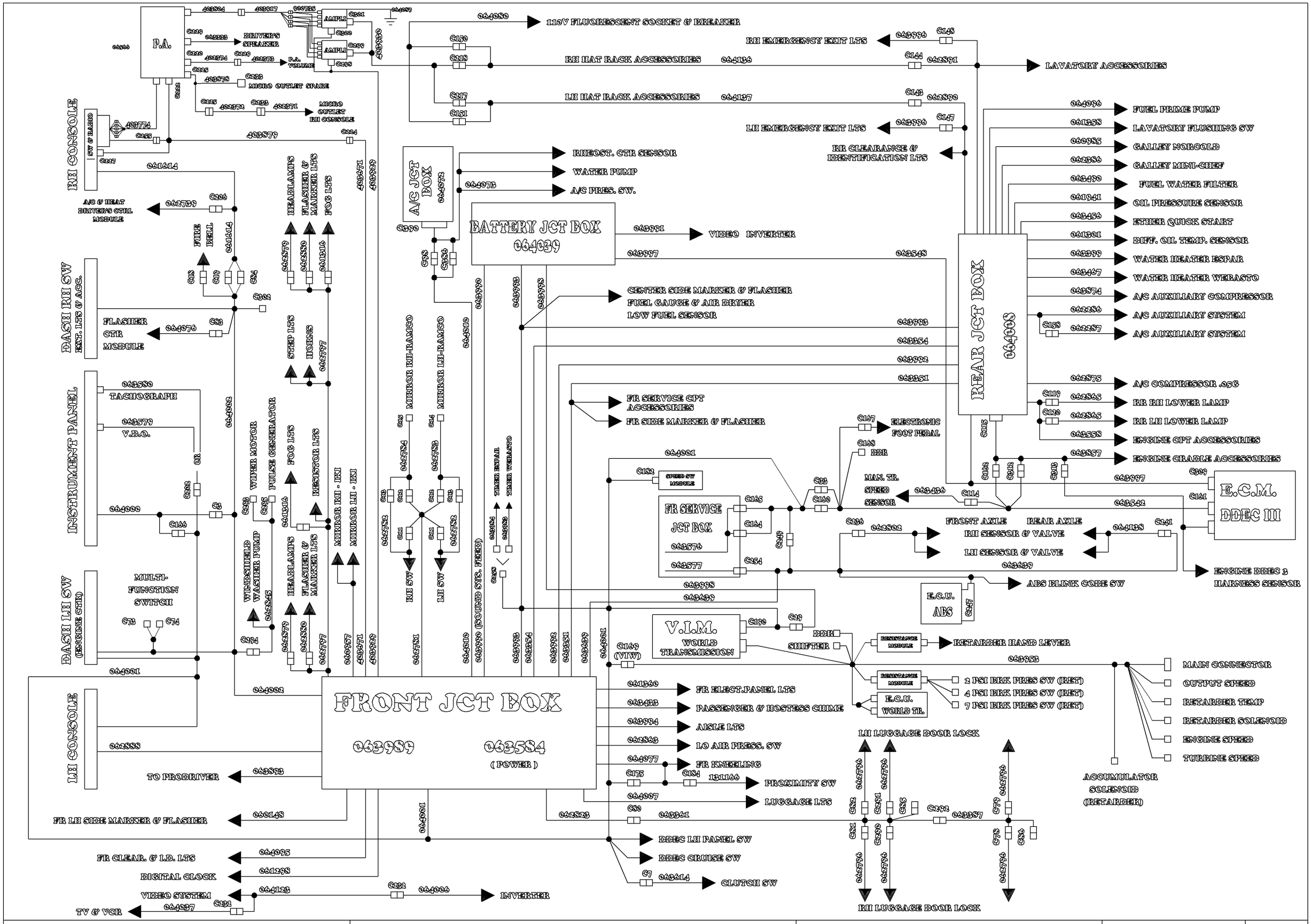

PREVOST CAR inc.	WIRING DIAGRAM	NO: D060872	P. C PRIOR	REVISION 002

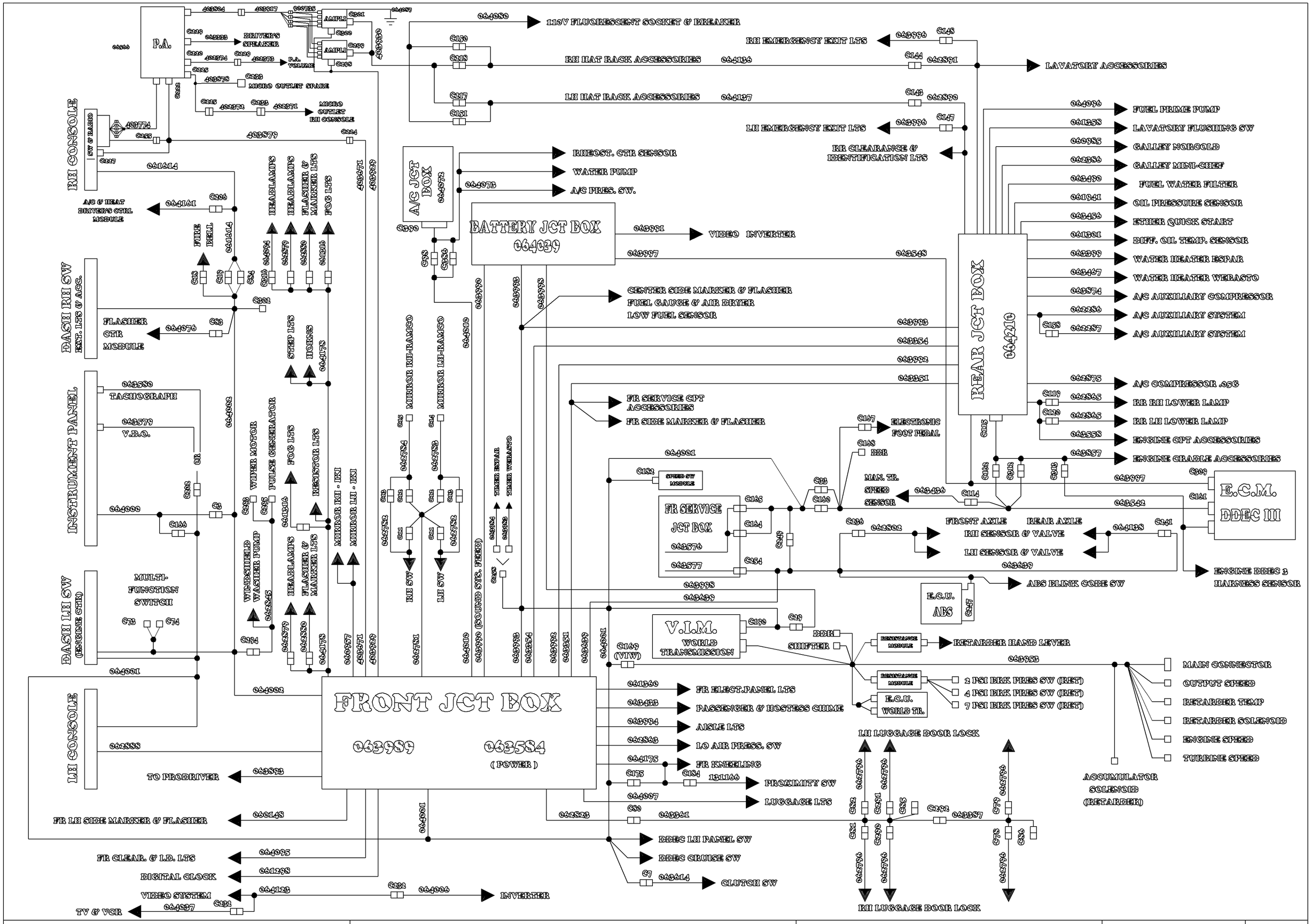

PREVOST CAR inc.	WIRING DIAGRAM	NO: D060872	P. C	REVISION 007

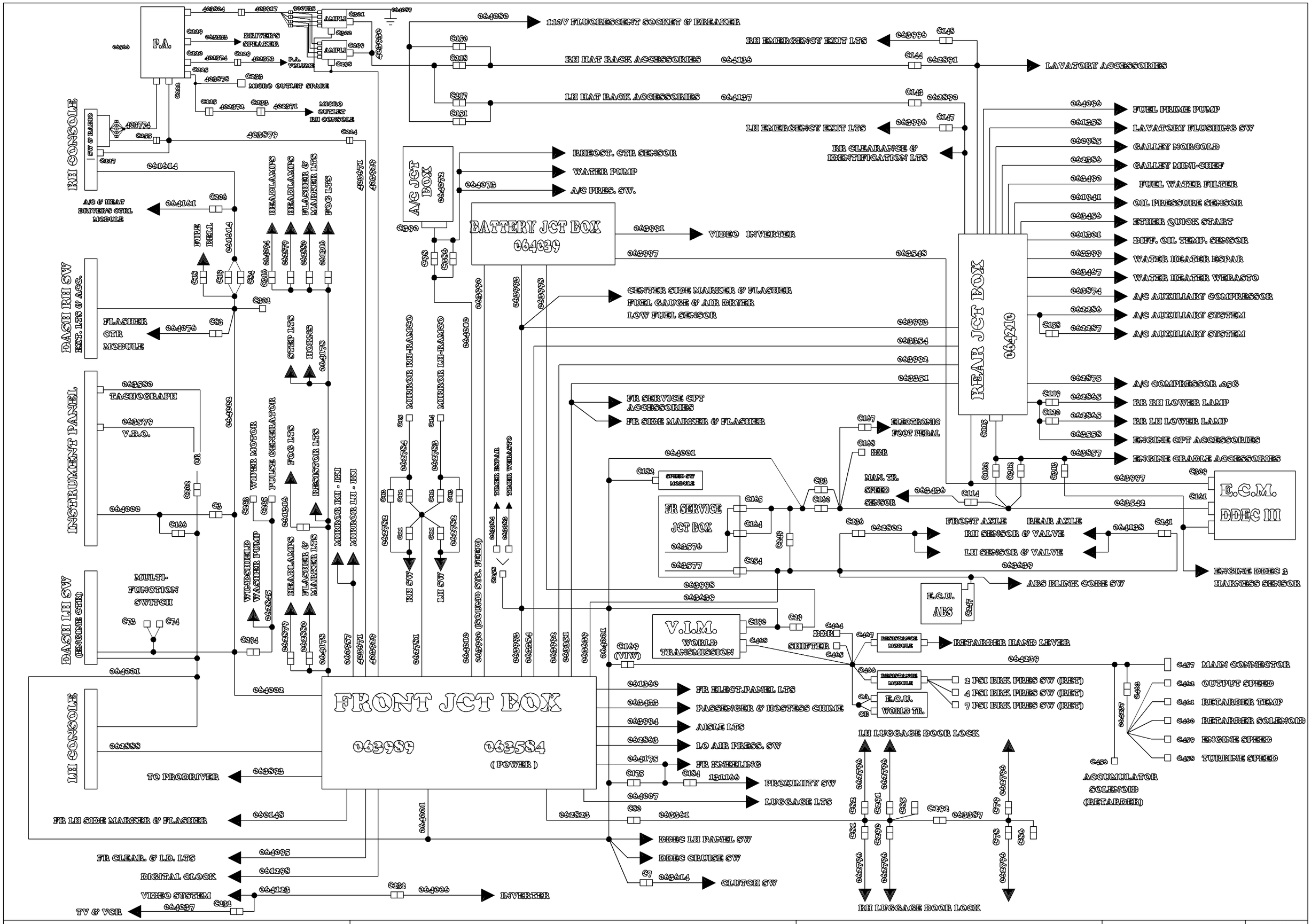

PREVOST CAR inc.	WIRING DIAGRAM	NO: D060872	P. C	REVISION 00S

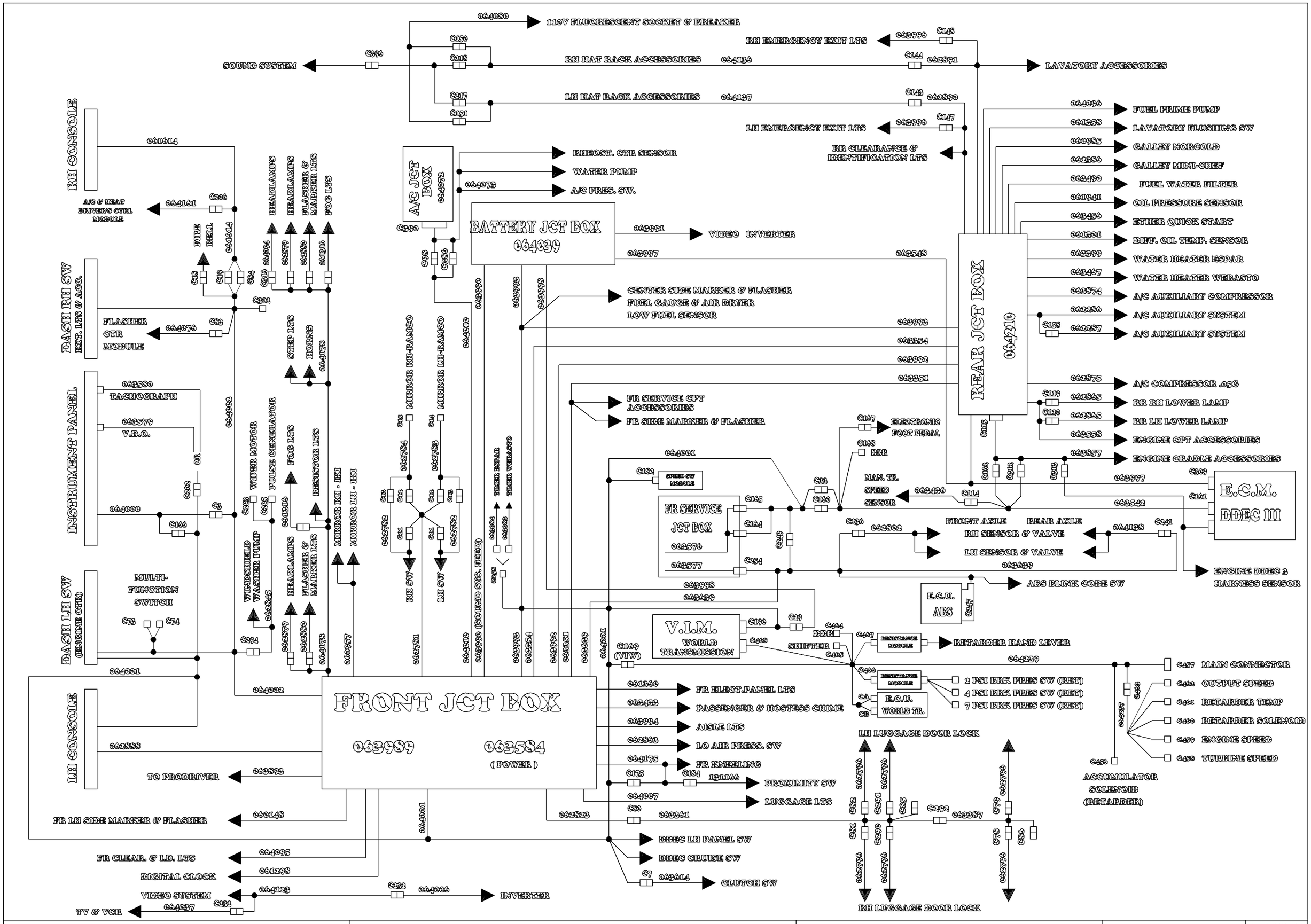

PREVOST CAR inc.	WIRING DIAGRAM	NO: D060872	P. C	REVISION 010

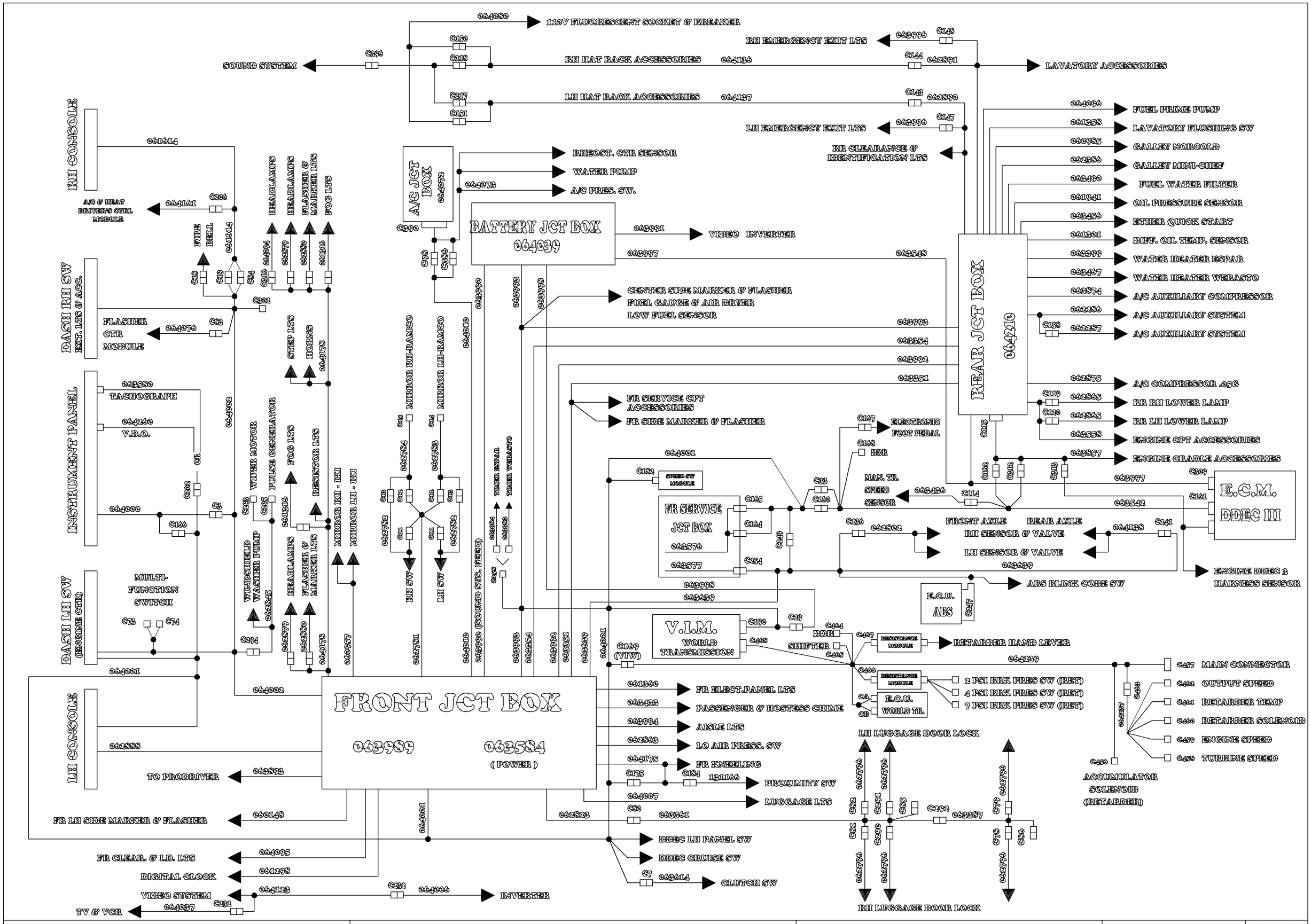

PREVOST CAR inc.	WIRING DIAGRAM	NO: D060872	P. C	REVISION 012

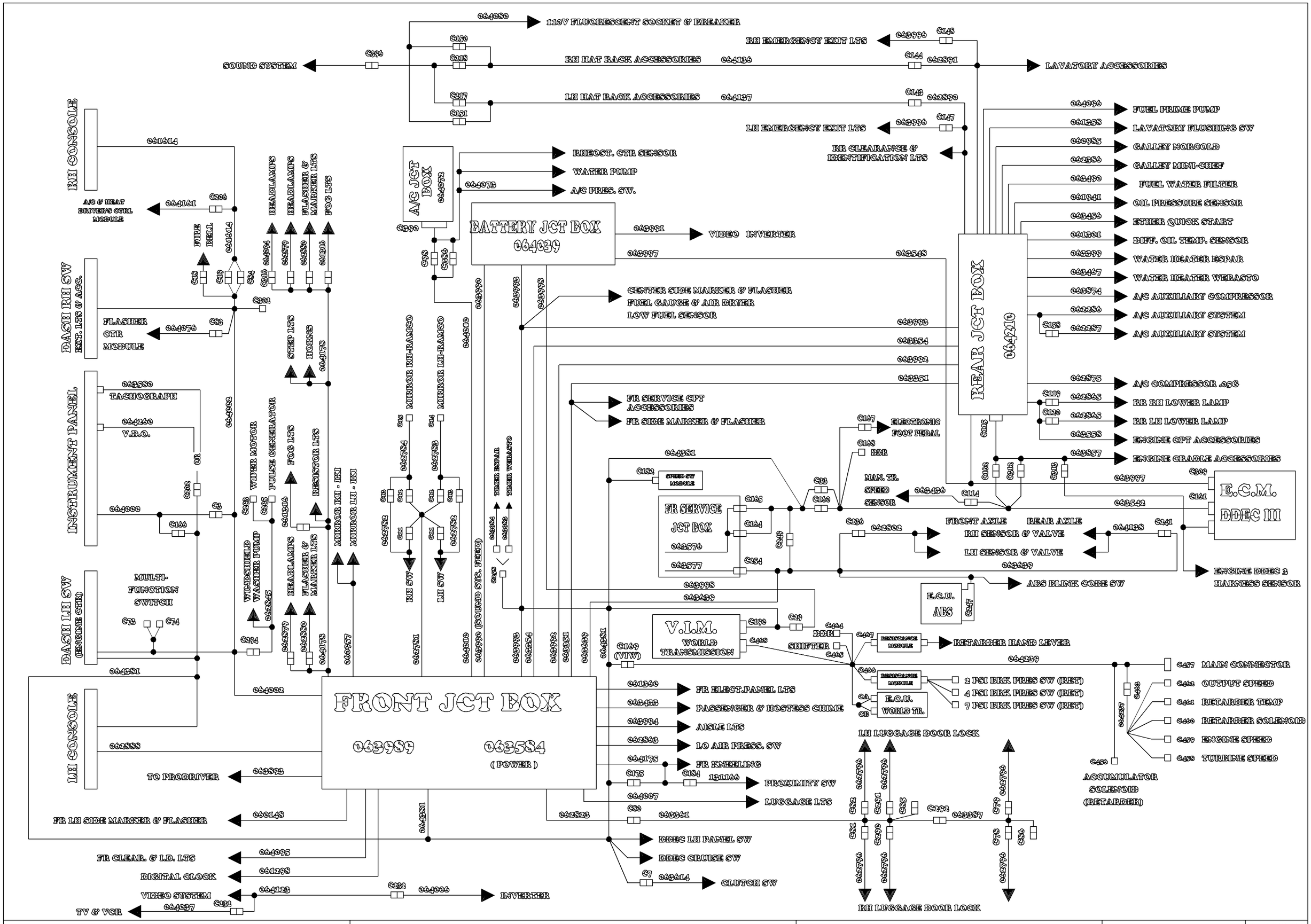

PREVOST CAR inc. | WIRING DIAGRAM | NO: D060872 | P. C | REVISION 013

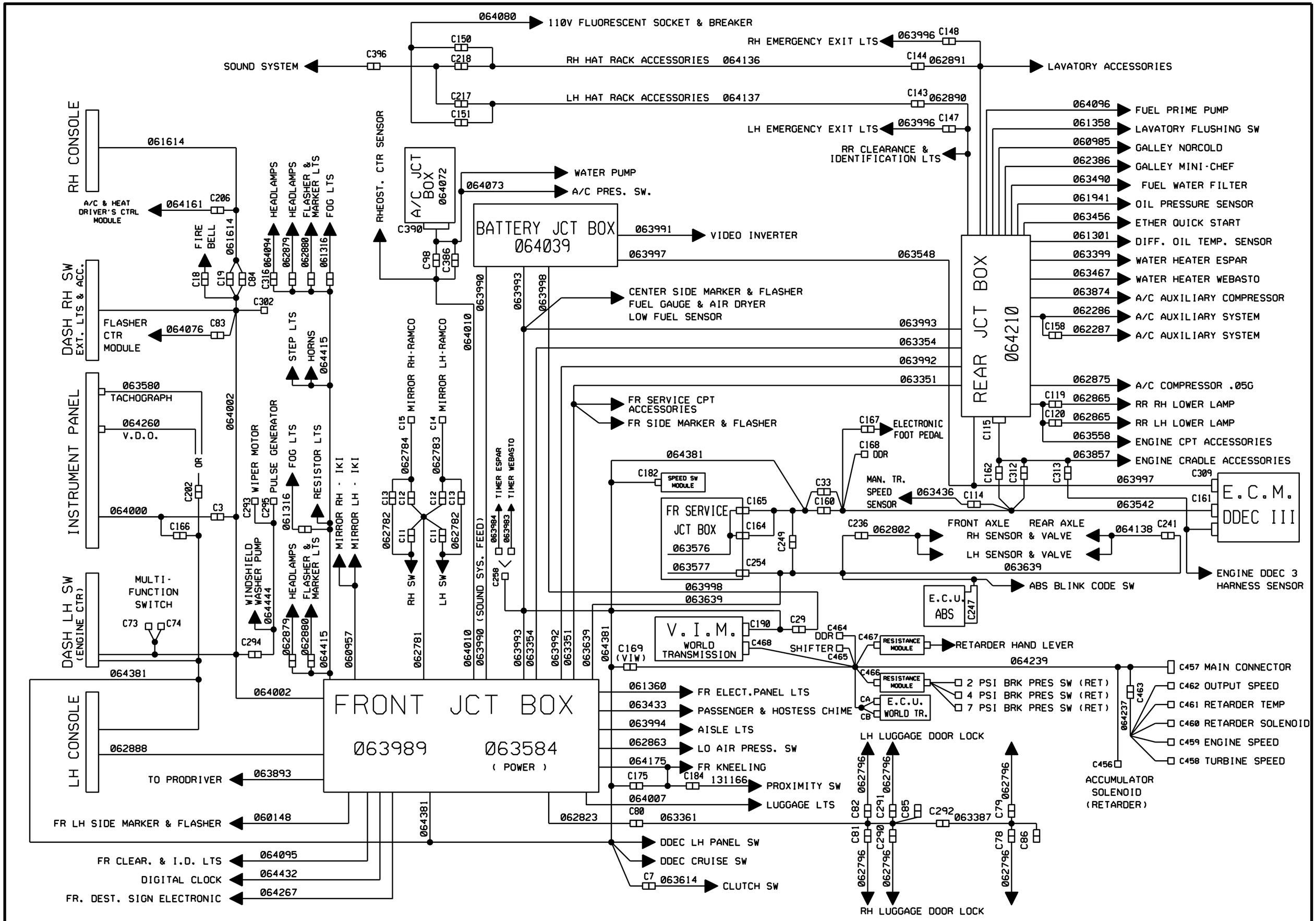

PREVOST CAR inc.	WIRING DIAGRAM	NO: D060872	P. C	REVISION 017

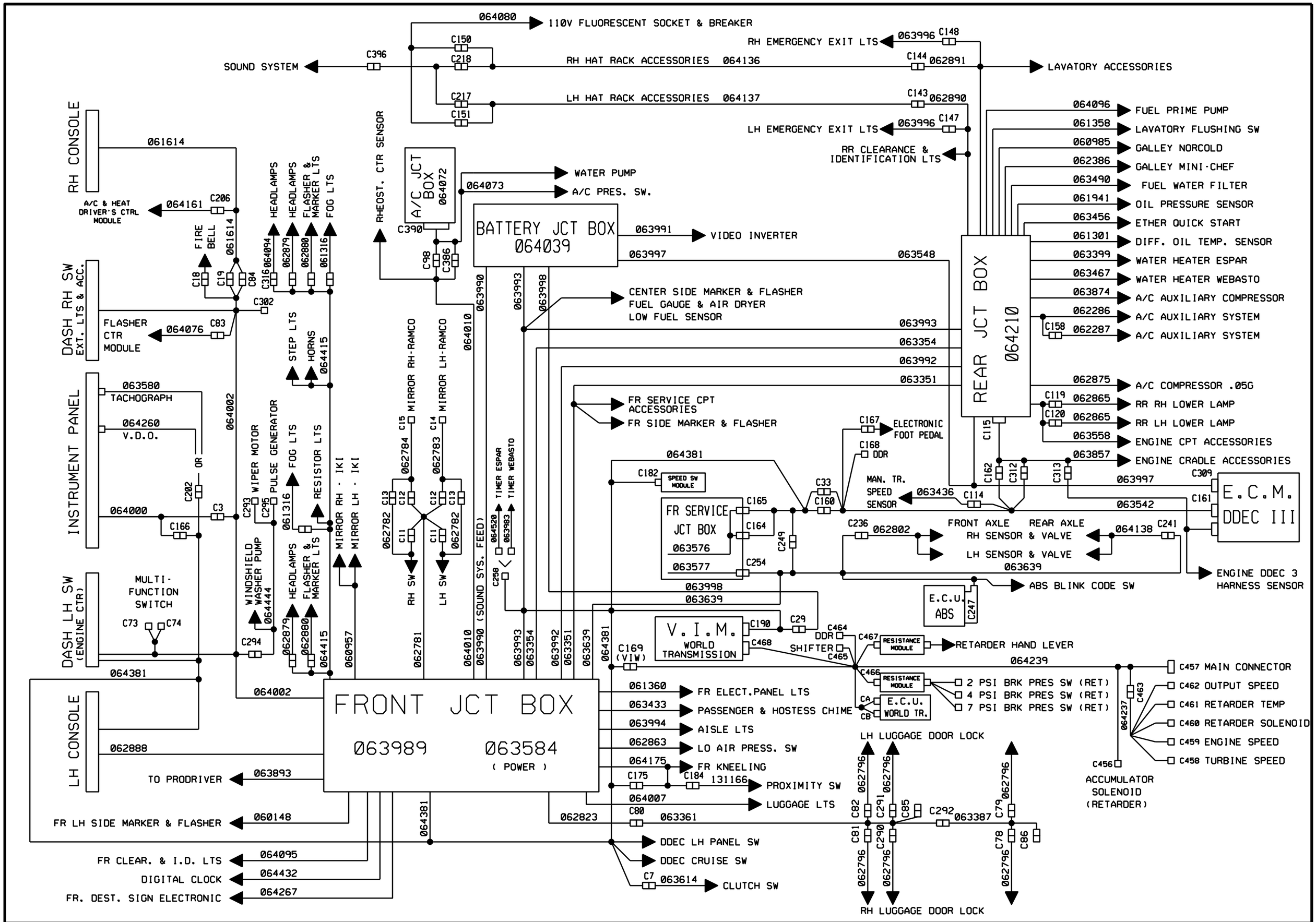

PREVOST CAR inc.	WIRING DIAGRAM	NO: D060872	P. C	REVISION 020

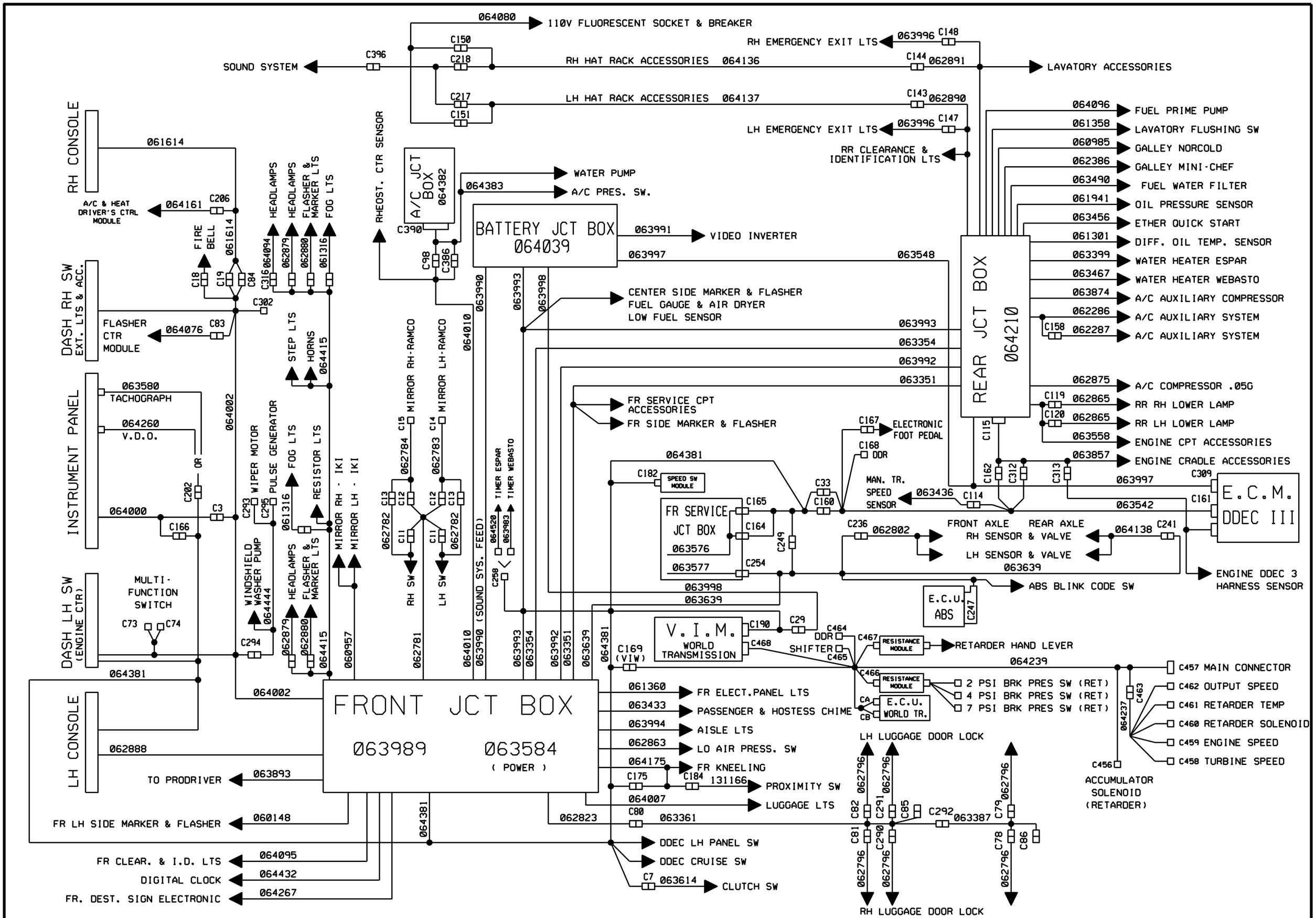

PREVOST CAR inc.	WIRING DIAGRAM	NO: D060872	P. C	REVISION 021

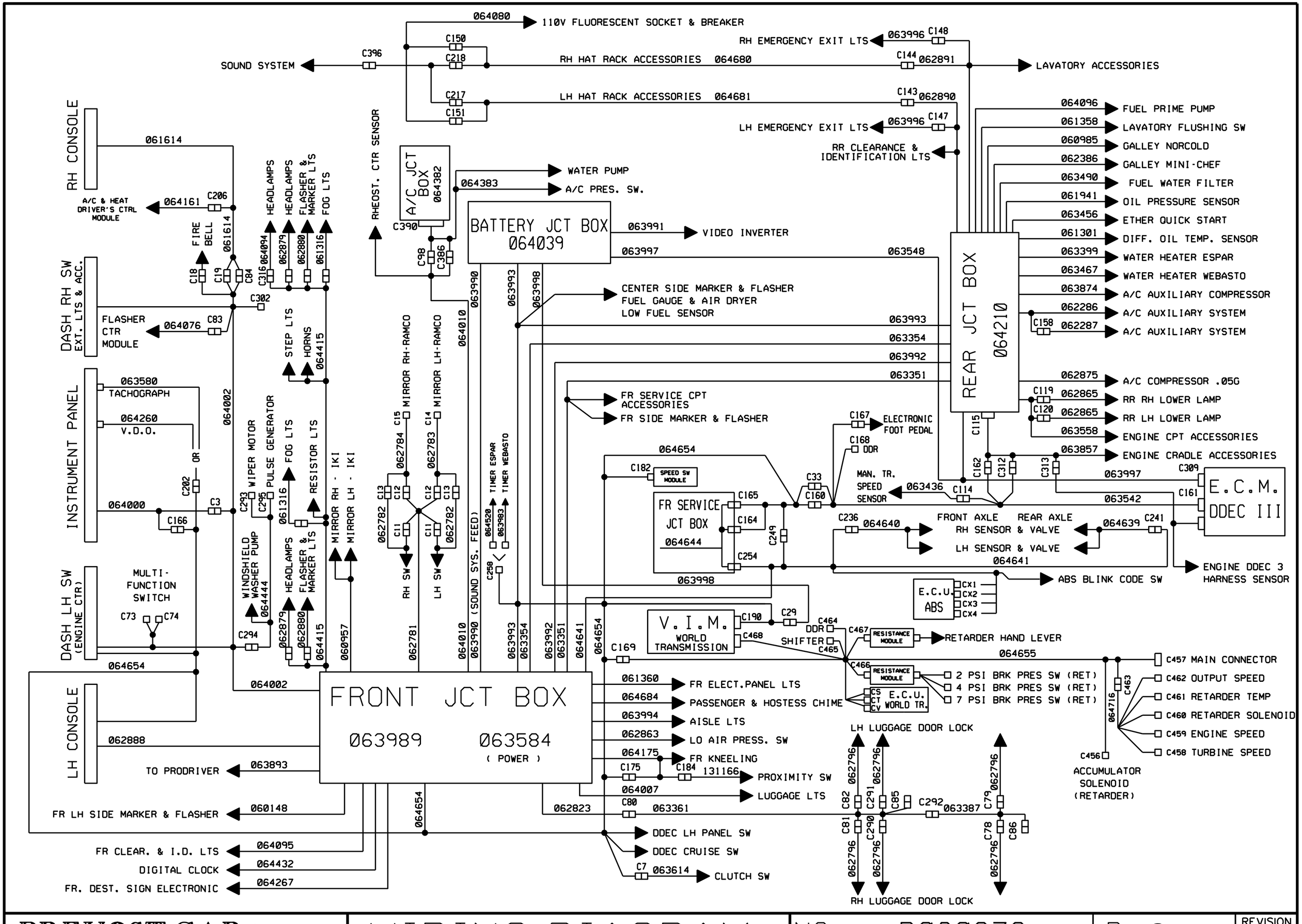

PREVOST CAR inc.	WIRING DIAGRAM	NO: D060872	P. C	REVISION 024

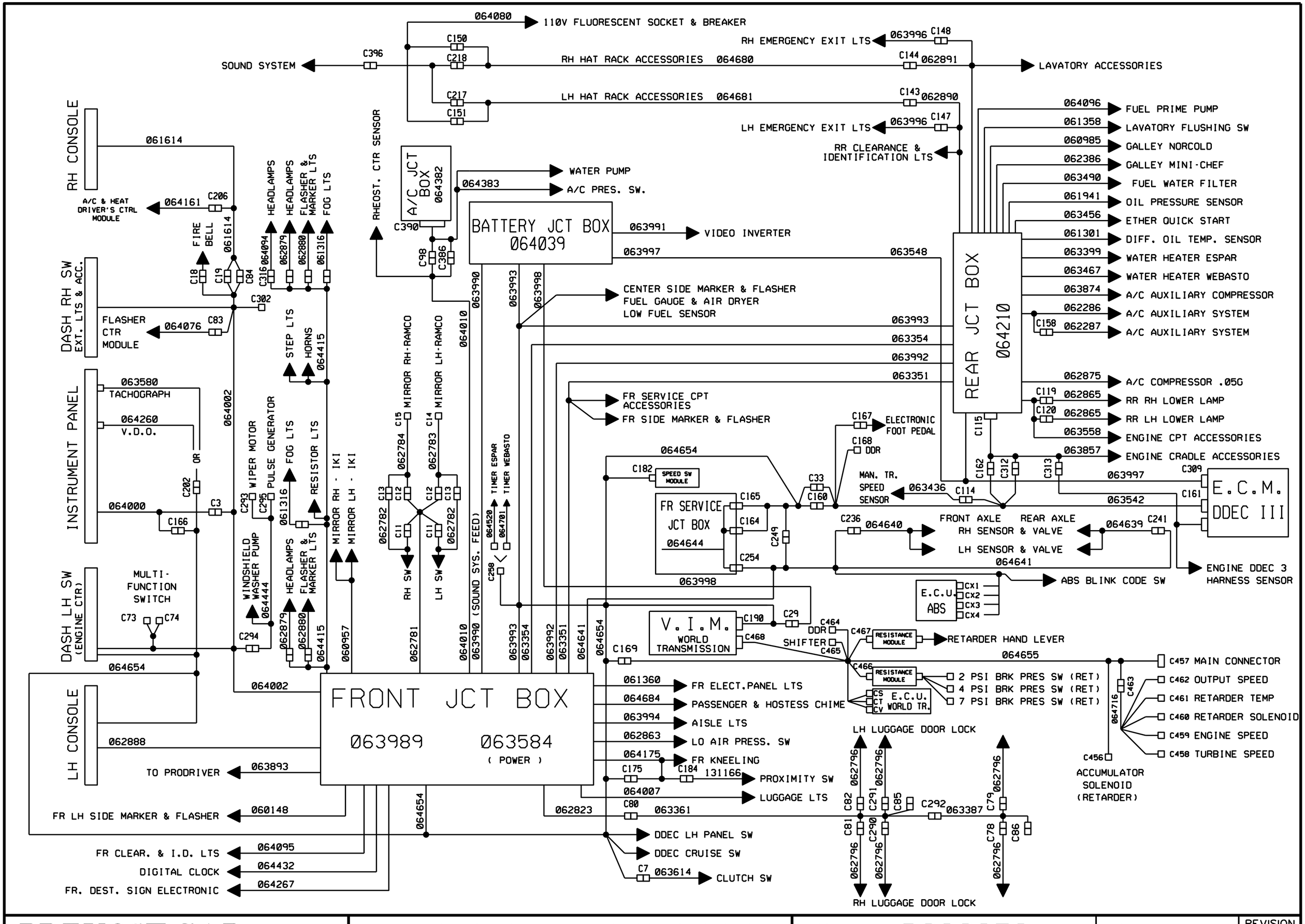

PREVOST CAR inc.	WIRING DIAGRAM	NO: D060872	P. C	REVISION 025

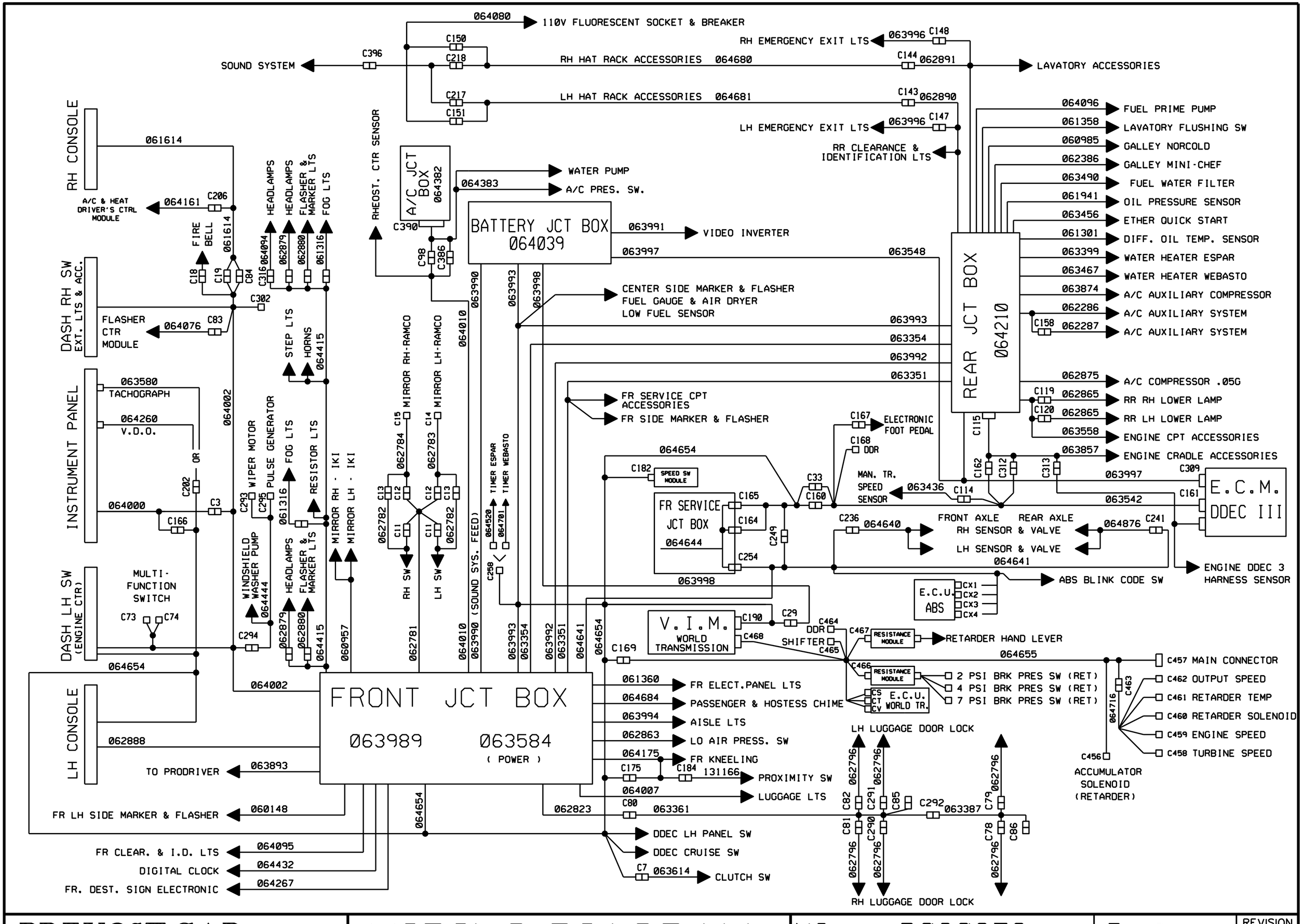

PREVOST CAR inc.	WIRING DIAGRAM	NO: D060872	P. C	REVISION 029

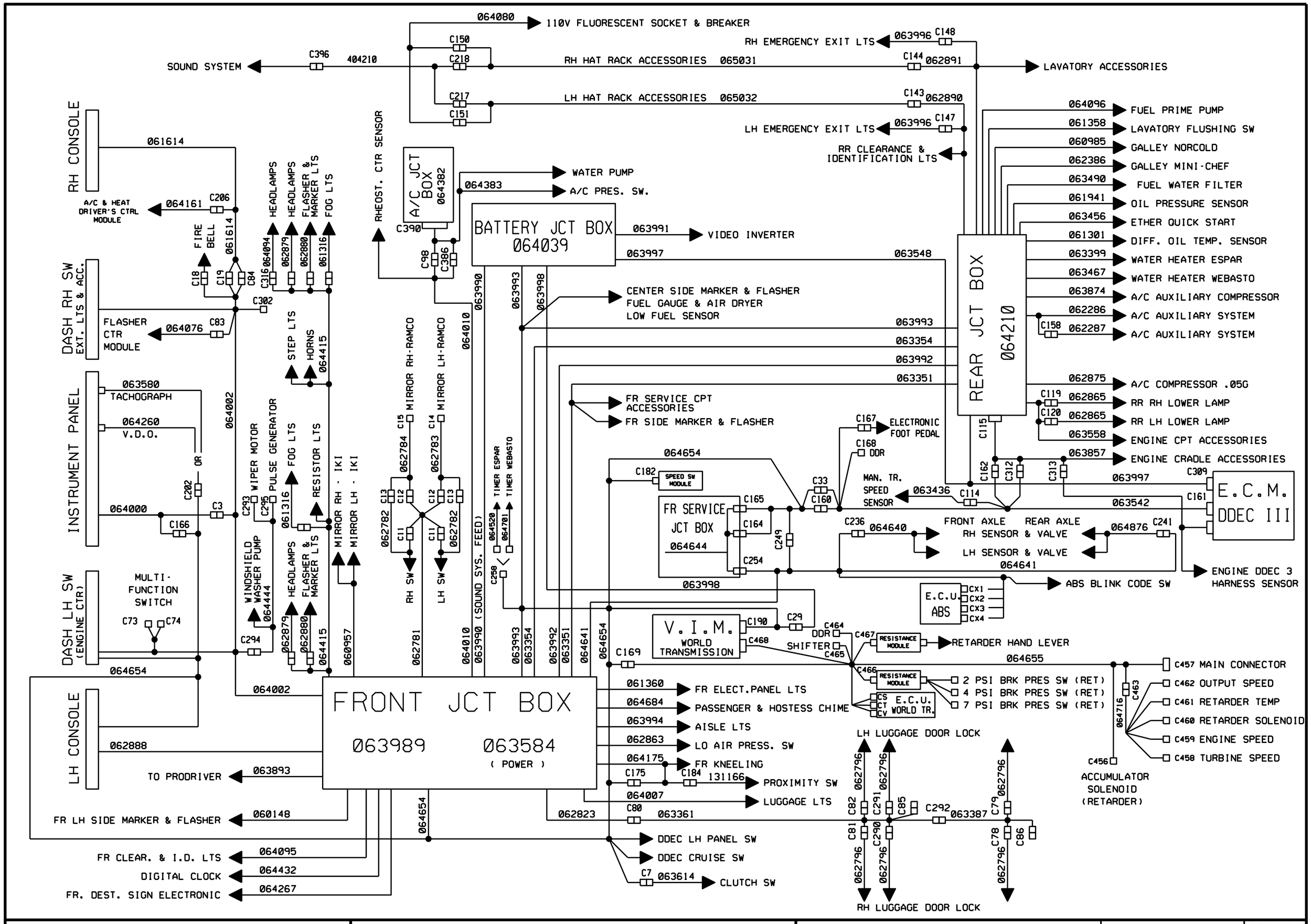

PREVOST CAR inc.	WIRING DIAGRAM	NO: D060872	P. C	REVISION 034

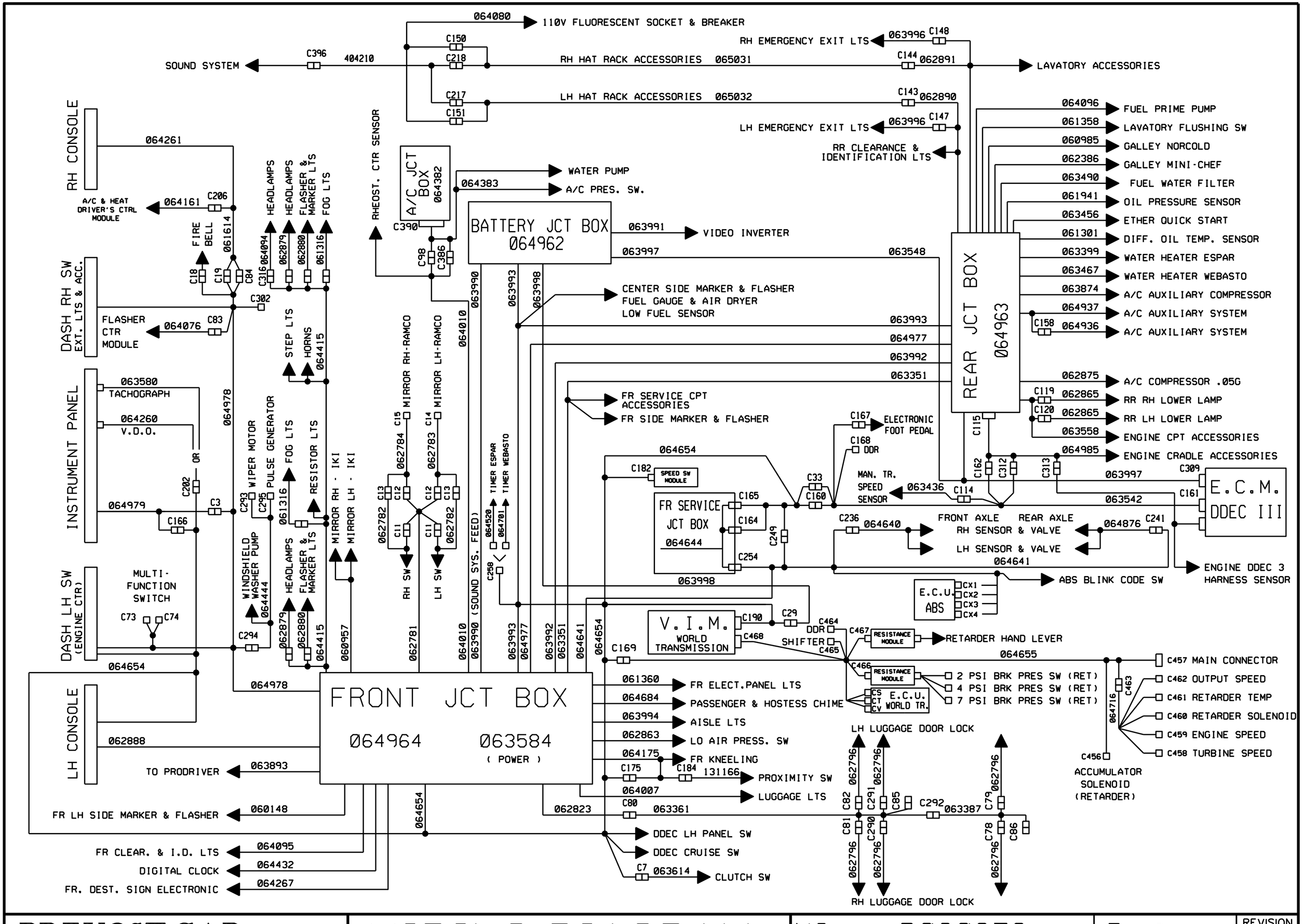

PREVOST CAR inc.	WIRING DIAGRAM	NO: D060872	P. C	REVISION 035

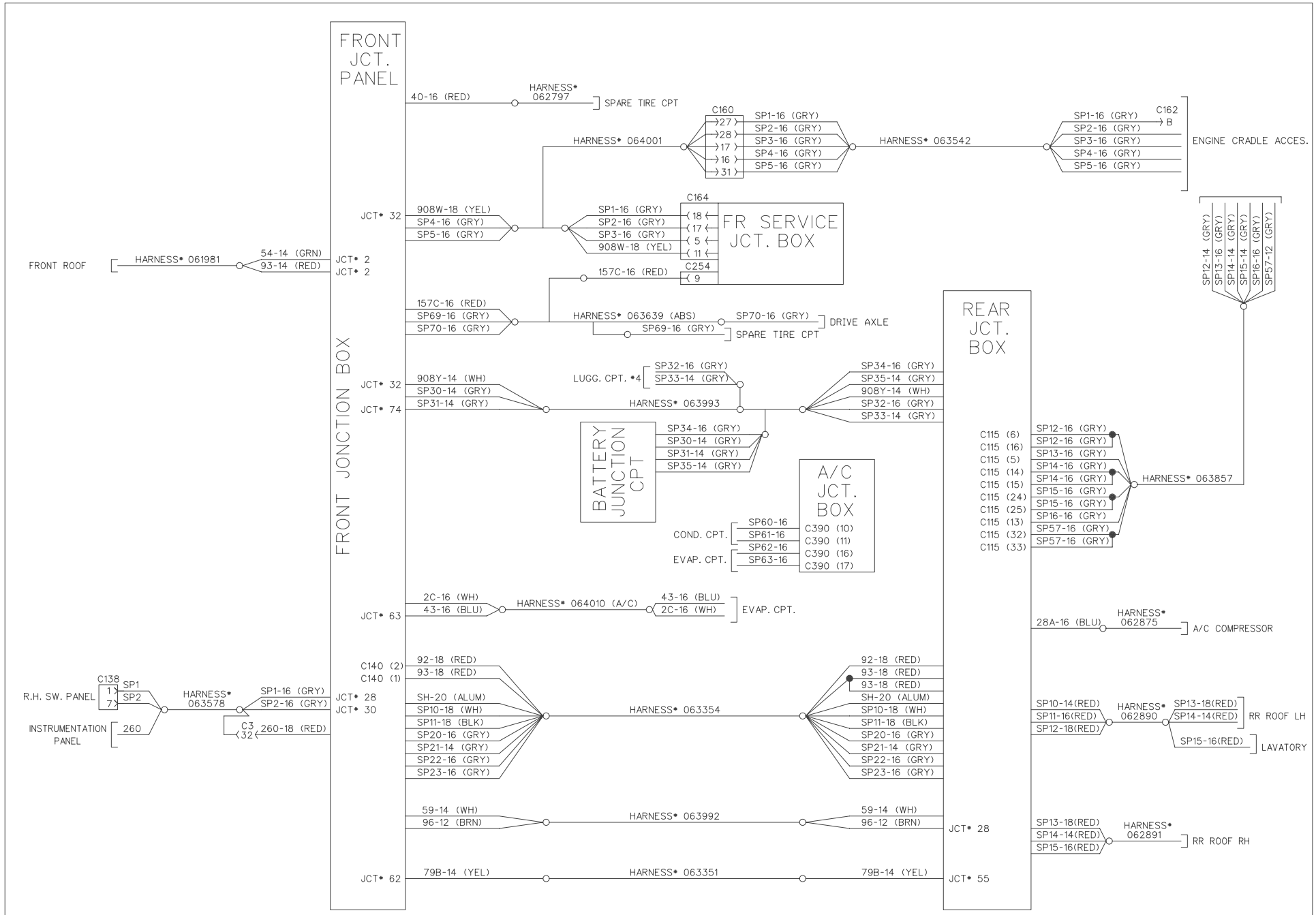

PREVOST CAR inc.	WIRING DIAGRAM	NO: D060872	P.D	REVISION 000

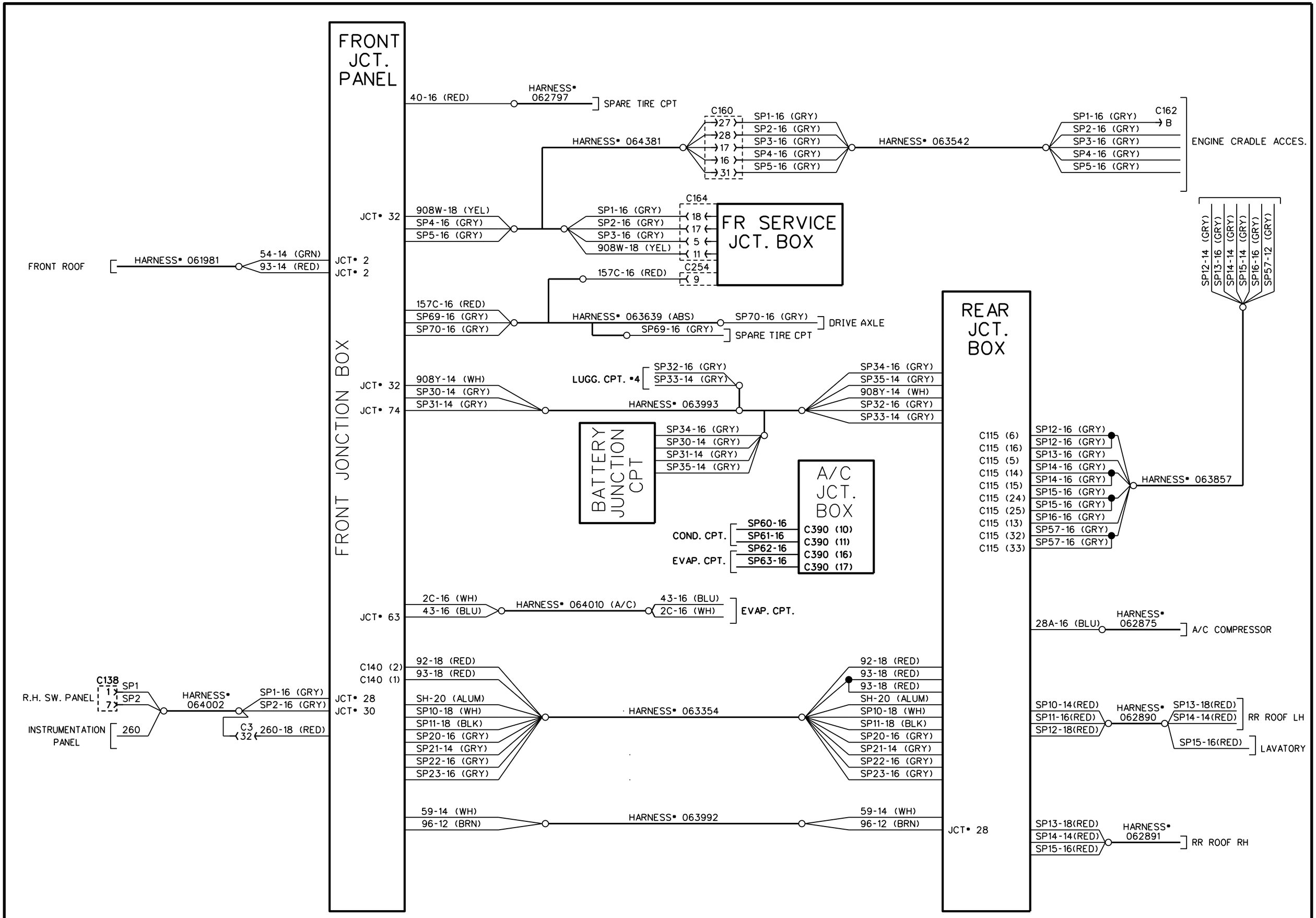

PREVOST CAR inc.	WIRING DIAGRAM	NO: D060872	P. D	REVISION 019

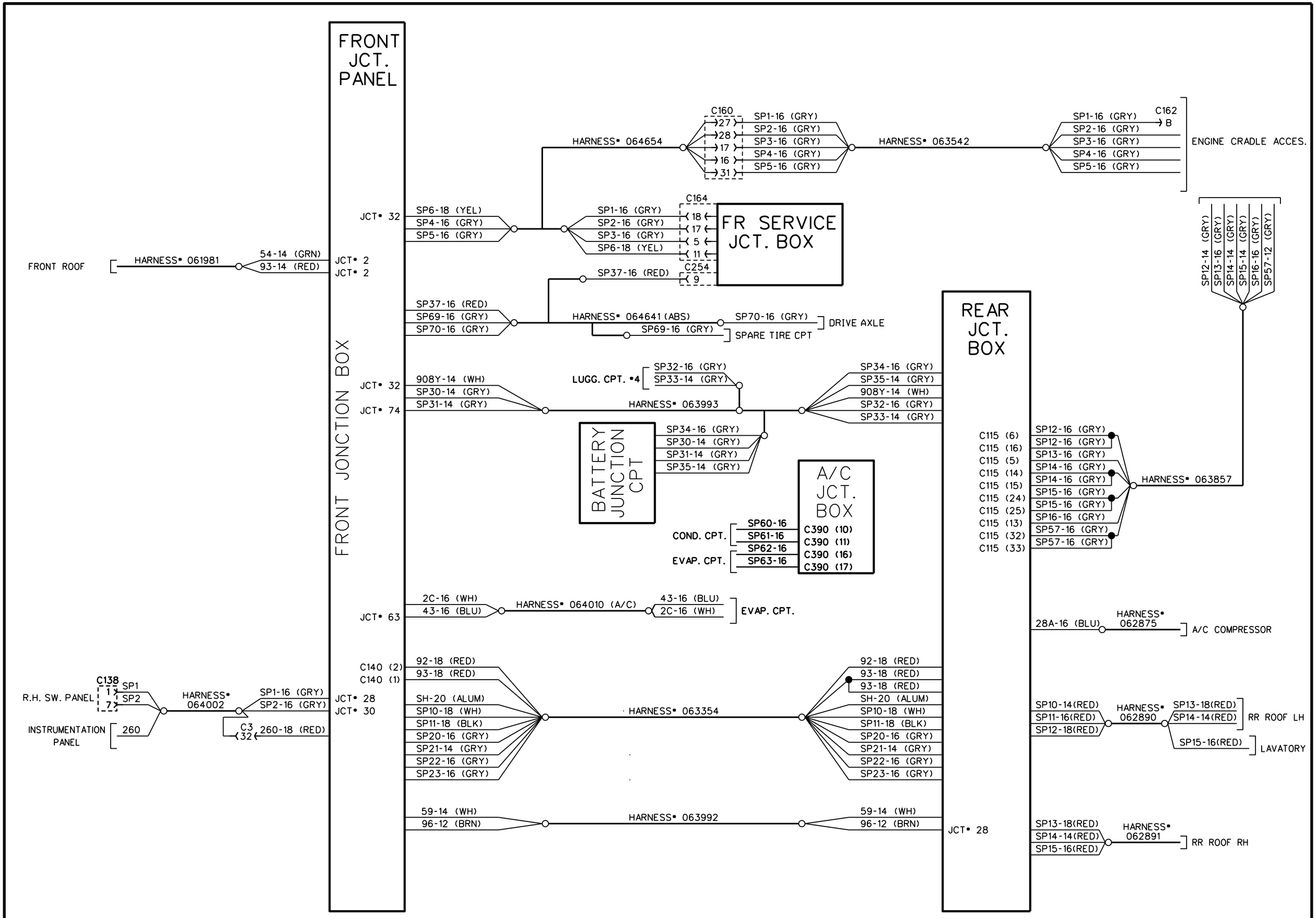

PREVOST CAR inc.	WIRING DIAGRAM	NO: D060872	P. D	REVISION 023

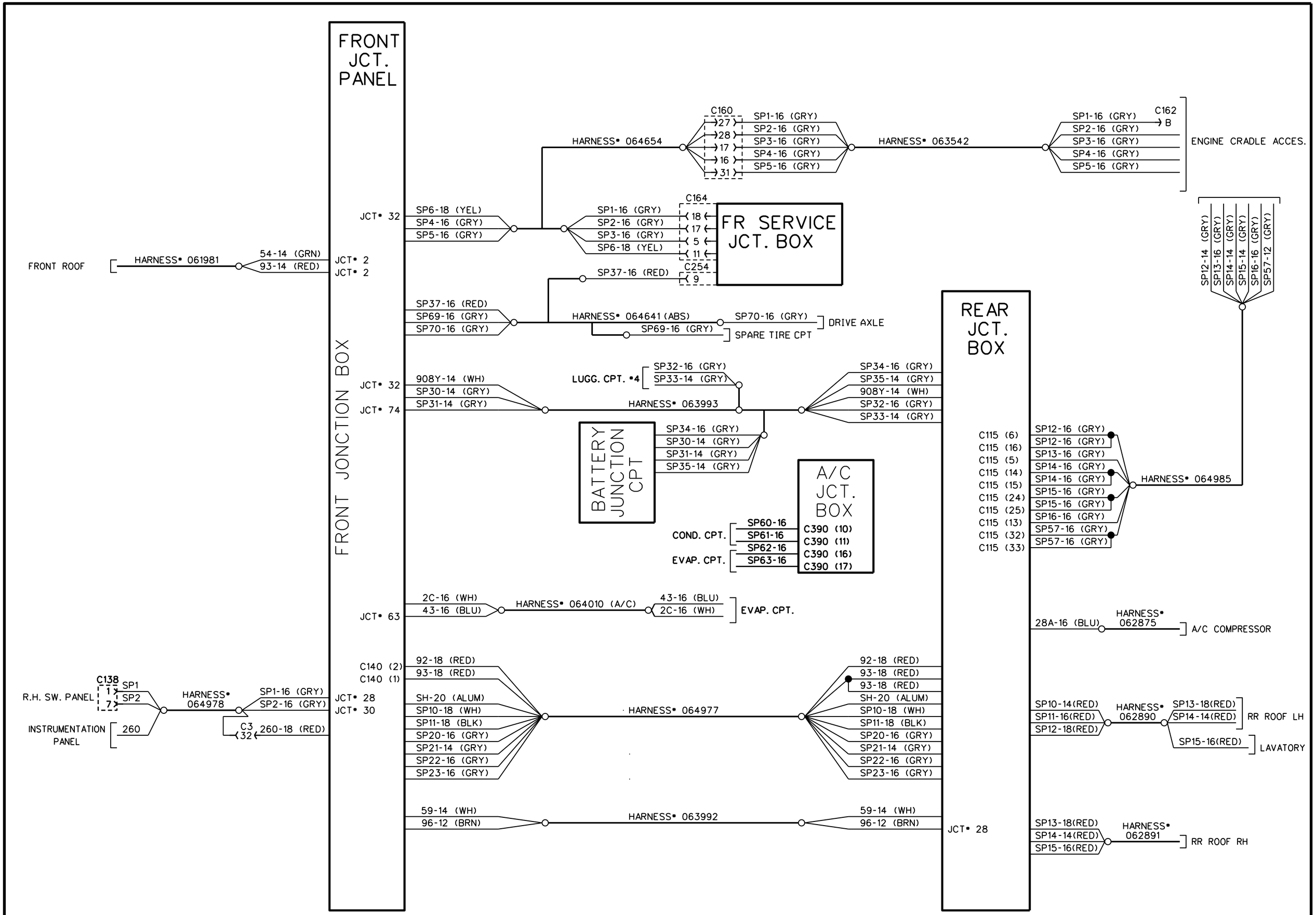

PREVOST CAR inc.	WIRING DIAGRAM	NO: D060872	P. D	REVISION 035

No.	STATION	No.	STATION
0	GND INSTRUMENT & VTS GND SYSTEM	7	REFERENCE LINE-PASSENGER LINE
0	GND INSTRUMENT AL VTS GND SYSTEM	7A	REFERENCE LINE-AISLE OF SECTION. LINE
0	GND SYSTEMES LOGICS VTS GND SYSTEM	7B	REFERENCE LINE-AISLE OF SECTION. LINE
0	BATT - GROUND	8	REFERENCE LINE-REFERENCE LINE
0	BATT - GROUND	9	REFERENCE LINE-RED DOOR LINE
0	BATT - GROUND	9	REFERENCE LINE-PAS.SERVICE STEP
0	BATT - GROUND	9	REFERENCE LINE-PAS.SERVICE STEP
0A	VTS SERVICE GND BOLT - GROUND	9	REFERENCE LINE-PAS.SERVICE STEP
0B	BATT - GROUND	9B	CHIELD-PASSENGERS OF REFERENCE
0C	BATT - GROUND	10	REFERENCE LINE-STEERING-LINE
0D	BOOSTERS BLE VS GROUND SYSTEM	10	REFERENCE LINE-LONGITUDINAL CENT
0DA	VT BATTERIES LOGISTICS	10A	REFERENCE LINE-LONGITUDINAL CENT
0E	BATT - GROUND	10B	REFERENCE LINE-LONGITUDINAL CENT
0F	ALTRIL - GROUND	10C	REFERENCE LINE-LONGITUDINAL CENT
0G0A	VAT BOXES, ENT BLIT GROUND SYSTEMAL	10D	REFERENCE LINE-LONGITUDINAL CENT
0G0B	VAT BOXES, ENT BLIT GROUND SYSTEMAL	10E	REFERENCE LINE-LONGITUDINAL CENT
0G1	BATT - GROUND	11	PTS. REFERENCE SYSTEM SYSTEM
0G2	BATT - GROUND	11A	PTS. REFERENCE SYSTEM SYSTEM
0G3	BATT - GROUND	11B	PTS. REFERENCE SYSTEM SYSTEM
0G4	BATT - GROUND	11C	PTS. REFERENCE SYSTEM SYSTEM
0G5	BALLOT-ST LOGISTICS	11D	PTS. REFERENCE SYSTEM SYSTEM
0G6A	VAT BOXES, ENT BLIT GROUND SYSTEMAL	11E	PTS. REFERENCE SYSTEM SYSTEM
0G6B	VAT BOXES, ENT BLIT GROUND SYSTEMAL	11F	PTS. REFERENCE SYSTEM SYSTEM
0G7	BATT - GROUND	11G	PTS. REFERENCE SYSTEM SYSTEM
0G8	BOOSTER SYSTEMES GROUND	11H	PTS. REFERENCE SYSTEM SYSTEM
0G9A	BATT - INSTRUMENT GROUND-SYSTEMES ETC.	11I	VAT TUBES SYSTEMES
0G9B	BATT - INSTRUMENT GROUND-SYSTEMES ETC.	11J	PTS. PAS PANEL, VAT BOXES ENT
0G9C	BATT - INSTRUMENT GROUND-SYSTEMES ETC.	11K	PTS. PAS PANEL, VAT BOXES ENT
0G9D	BATTERIES - INSTRUMENT GROUND	11KA	PTS. PAS PANEL, VAT BOXES ENT
0G9E	TUBES - INSTRUMENT GROUND	11KB	VAT TUBES SYSTEMES
0G9F	BOOSTER SYSTEMES - INSTRUMENT GROUND	11L	PTS. PAS PANEL, VAT BOXES ENT
0G9G	BOOSTER SYSTEMES - INSTRUMENT GROUND	11LA	PTS. PAS PANEL, VAT BOXES ENT
0G9H	BATT - GROUND	11LB	PTS. PAS PANEL, VAT BOXES ENT
0G9I	BOOS SYSTEMES GPS-GLONASS-GALILEO	11LC	PTS. PAS PANEL, VAT BOXES ENT
0G9J	BATT - GROUND	11LD	PTS. PAS PANEL, VAT BOXES ENT
0G9K	BOOS SYSTEMES VTS-GLONASS-GALILEO	11LE	PTS. PAS PANEL, VAT BOXES ENT
0H	VTS/ELEC VTS/ELEC VTS/ELEC GROUND	11LF	PTS. PAS PANEL, VAT BOXES ENT
0HA	THOR, THOR TRAINER THOR TRAINER VTS/ELEC	11LG	PTS. PAS PANEL, VAT BOXES ENT
0HB	THOR, THOR TRAINER THOR TRAINER VTS/ELEC	11LH	PTS. PAS PANEL, VAT BOXES ENT
0I	ALTRIL - GROUND	11M	BALLOT-ST LOGISTICS
0J	ALTRIL - GROUND	11MA	PTS. PAS PANEL, VAT BOXES ENT
1	ALT. OF ITALIC SYSTEMES-SYSTEMES-SYSTEMES	11MB	PTS. PAS PANEL, VAT BOXES ENT
1A	ALT. OF ITALIC SYSTEMES-SYSTEMES-SYSTEMES	11N	VAT TUBES SYSTEMES
1AA	ALT. OF ITALIC SYSTEMES-SYSTEMES-SYSTEMES	11NA	PTS. PAS PANEL, VAT BOXES ENT
1AB	ALT. OF ITALIC SYSTEMES-SYSTEMES-SYSTEMES	11NB	PTS. PAS PANEL, VAT BOXES ENT
1B	ALT. OF ITALIC SYSTEMES-SYSTEMES-SYSTEMES	11O	VAT TUBES SYSTEMES
1C	ALT. OF ITALIC SYSTEMES-ATTACHMENTS-SYSTEMES	11OA	PTS. PAS PANEL, VAT BOXES ENT
1D	ALT. OF ITALIC SYSTEMES-ATTACHMENTS-SYSTEMES	11OB	PTS. PAS PANEL, VAT BOXES ENT
1E	ALT. OF ITALIC SYSTEMES-ATTACHMENTS-SYSTEMES	11P	VAT TUBES SYSTEMES
1F	CHIELD-PASSENGERS OF REFERENCE	11PA	PTS. PAS PANEL, VAT BOXES ENT
1G	CHIELD-PASSENGERS OF REFERENCE	11PB	PTS. PAS PANEL, VAT BOXES ENT
1GA	CHIELD-PASSENGERS OF REFERENCE	11PC	PTS. PAS PANEL, VAT BOXES ENT
1GB	CHIELD-PASSENGERS OF REFERENCE	11PD	VAT TRANSMITTERS VAT BOXES ENT
1GC	CHIELD-PASSENGERS OF REFERENCE	11PE	PTS. PAS PANEL, VAT BOXES ENT
1GD	CHIELD-PASSENGERS OF REFERENCE	11PF	PTS. PAS PANEL, VAT BOXES ENT
1GE	CHIELD-PASSENGERS OF REFERENCE	11PG	PTS. PAS PANEL, VAT BOXES ENT
1GF	CHIELD-PASSENGERS OF REFERENCE	11PH	PTS. PAS PANEL, VAT BOXES ENT
1H	REFERENCE LINE-PASSENGERS LINE	11PI	PTS. PAS PANEL, VAT BOXES ENT
1HA	REFERENCE LINE-PASSENGERS LINE	11PJ	PTS. PAS PANEL, VAT BOXES ENT
1HB	REFERENCE LINE-PASSENGERS LINE	11PK	PTS. PAS PANEL, VAT BOXES ENT
1HC	REFERENCE LINE-PASSENGERS LINE	11PL	PTS. PAS PANEL, VAT BOXES ENT
1HD	REFERENCE LINE-PASSENGERS LINE	11PM	PTS. PAS PANEL, VAT BOXES ENT
1HE	REFERENCE LINE-PASSENGERS LINE	11PN	PTS. PAS PANEL, VAT BOXES ENT
1HF	REFERENCE LINE-PASSENGERS LINE	11PO	PTS. PAS PANEL, VAT BOXES ENT
1HG	REFERENCE LINE-PASSENGERS LINE	11PP	PTS. PAS PANEL, VAT BOXES ENT
1HH	REFERENCE LINE-PASSENGERS LINE	11PQ	PTS. PAS PANEL, VAT BOXES ENT
1HI	REFERENCE LINE-PASSENGERS LINE	11PR	PTS. PAS PANEL, VAT BOXES ENT
1HJ	REFERENCE LINE-PASSENGERS LINE	11PS	PTS. PAS PANEL, VAT BOXES ENT
1HK	REFERENCE LINE-PASSENGERS LINE	11PT	PTS. PAS PANEL, VAT BOXES ENT
1HL	REFERENCE LINE-PASSENGERS LINE	11PU	PTS. PAS PANEL, VAT BOXES ENT
1HM	REFERENCE LINE-PASSENGERS LINE	11PV	PTS. PAS PANEL, VAT BOXES ENT
1HN	REFERENCE LINE-PASSENGERS LINE	11PW	PTS. PAS PANEL, VAT BOXES ENT
1HO	REFERENCE LINE-PASSENGERS LINE	11PX	PTS. PAS PANEL, VAT BOXES ENT
1HP	REFERENCE LINE-PASSENGERS LINE	11PY	PTS. PAS PANEL, VAT BOXES ENT
1HQ	REFERENCE LINE-PASSENGERS LINE	11PZ	PTS. PAS PANEL, VAT BOXES ENT
1HR	REFERENCE LINE-PASSENGERS LINE	11QA	PTS. PAS PANEL, VAT BOXES ENT
1HS	REFERENCE LINE-PASSENGERS LINE	11QB	PTS. PAS PANEL, VAT BOXES ENT
1HT	REFERENCE LINE-PASSENGERS LINE	11QC	PTS. PAS PANEL, VAT BOXES ENT
1HU	REFERENCE LINE-PASSENGERS LINE	11QD	PTS. PAS PANEL, VAT BOXES ENT
1HV	REFERENCE LINE-PASSENGERS LINE	11QE	PTS. PAS PANEL, VAT BOXES ENT
1HW	REFERENCE LINE-PASSENGERS LINE	11QF	PTS. PAS PANEL, VAT BOXES ENT
1HX	REFERENCE LINE-PASSENGERS LINE	11QG	PTS. PAS PANEL, VAT BOXES ENT
1HY	REFERENCE LINE-PASSENGERS LINE	11QH	PTS. PAS PANEL, VAT BOXES ENT
1HZ	REFERENCE LINE-PASSENGERS LINE	11QI	PTS. PAS PANEL, VAT BOXES ENT
1I	REFERENCE LINE-PASSENGERS LINE	11QJ	PTS. PAS PANEL, VAT BOXES ENT
1IA	REFERENCE LINE-PASSENGERS LINE	11QK	PTS. PAS PANEL, VAT BOXES ENT
1IB	REFERENCE LINE-PASSENGERS LINE	11QL	PTS. PAS PANEL, VAT BOXES ENT
1IC	REFERENCE LINE-PASSENGERS LINE	11QM	PTS. PAS PANEL, VAT BOXES ENT
1ID	REFERENCE LINE-PASSENGERS LINE	11QN	PTS. PAS PANEL, VAT BOXES ENT
1IE	REFERENCE LINE-PASSENGERS LINE	11QO	PTS. PAS PANEL, VAT BOXES ENT
1IF	REFERENCE LINE-PASSENGERS LINE	11QP	PTS. PAS PANEL, VAT BOXES ENT
1IG	REFERENCE LINE-PASSENGERS LINE	11QQ	PTS. PAS PANEL, VAT BOXES ENT
1IH	REFERENCE LINE-PASSENGERS LINE	11QR	PTS. PAS PANEL, VAT BOXES ENT
1II	REFERENCE LINE-PASSENGERS LINE	11QS	PTS. PAS PANEL, VAT BOXES ENT
1IJ	REFERENCE LINE-PASSENGERS LINE	11QT	PTS. PAS PANEL, VAT BOXES ENT
1IK	REFERENCE LINE-PASSENGERS LINE	11QU	PTS. PAS PANEL, VAT BOXES ENT
1IL	REFERENCE LINE-PASSENGERS LINE	11QV	PTS. PAS PANEL, VAT BOXES ENT
1IM	REFERENCE LINE-PASSENGERS LINE	11QW	PTS. PAS PANEL, VAT BOXES ENT
1IN	REFERENCE LINE-PASSENGERS LINE	11QX	PTS. PAS PANEL, VAT BOXES ENT
1IO	REFERENCE LINE-PASSENGERS LINE	11QY	PTS. PAS PANEL, VAT BOXES ENT
1IP	REFERENCE LINE-PASSENGERS LINE	11QZ	PTS. PAS PANEL, VAT BOXES ENT
1IQ	REFERENCE LINE-PASSENGERS LINE	11RA	PTS. PAS PANEL, VAT BOXES ENT
1IR	REFERENCE LINE-PASSENGERS LINE	11RB	PTS. PAS PANEL, VAT BOXES ENT
1IS	REFERENCE LINE-PASSENGERS LINE	11RC	PTS. PAS PANEL, VAT BOXES ENT
1IT	REFERENCE LINE-PASSENGERS LINE	11RD	PTS. PAS PANEL, VAT BOXES ENT
1IU	REFERENCE LINE-PASSENGERS LINE	11RE	PTS. PAS PANEL, VAT BOXES ENT
1IV	REFERENCE LINE-PASSENGERS LINE	11RF	PTS. PAS PANEL, VAT BOXES ENT
1IW	REFERENCE LINE-PASSENGERS LINE	11RG	PTS. PAS PANEL, VAT BOXES ENT
1IX	REFERENCE LINE-PASSENGERS LINE	11RH	PTS. PAS PANEL, VAT BOXES ENT
1IY	REFERENCE LINE-PASSENGERS LINE	11RI	PTS. PAS PANEL, VAT BOXES ENT
1IZ	REFERENCE LINE-PASSENGERS LINE	11RJ	PTS. PAS PANEL, VAT BOXES ENT
1J	REFERENCE LINE-PASSENGERS LINE	11RK	PTS. PAS PANEL, VAT BOXES ENT
1JA	REFERENCE LINE-PASSENGERS LINE	11RL	PTS. PAS PANEL, VAT BOXES ENT
1JB	REFERENCE LINE-PASSENGERS LINE	11RM	PTS. PAS PANEL, VAT BOXES ENT
1JC	REFERENCE LINE-PASSENGERS LINE	11RN	PTS. PAS PANEL, VAT BOXES ENT
1JD	REFERENCE LINE-PASSENGERS LINE	11RO	PTS. PAS PANEL, VAT BOXES ENT
1JE	REFERENCE LINE-PASSENGERS LINE	11RP	PTS. PAS PANEL, VAT BOXES ENT
1JF	REFERENCE LINE-PASSENGERS LINE	11RQ	PTS. PAS PANEL, VAT BOXES ENT
1JG	REFERENCE LINE-PASSENGERS LINE	11RR	PTS. PAS PANEL, VAT BOXES ENT
1JH	REFERENCE LINE-PASSENGERS LINE	11RS	PTS. PAS PANEL, VAT BOXES ENT
1JI	REFERENCE LINE-PASSENGERS LINE	11RT	PTS. PAS PANEL, VAT BOXES ENT
1JJ	REFERENCE LINE-PASSENGERS LINE	11RU	PTS. PAS PANEL, VAT BOXES ENT
1JK	REFERENCE LINE-PASSENGERS LINE	11RV	PTS. PAS PANEL, VAT BOXES ENT
1JL	REFERENCE LINE-PASSENGERS LINE	11RW	PTS. PAS PANEL, VAT BOXES ENT
1JM	REFERENCE LINE-PASSENGERS LINE	11RX	PTS. PAS PANEL, VAT BOXES ENT
1JN	REFERENCE LINE-PASSENGERS LINE	11RY	PTS. PAS PANEL, VAT BOXES ENT
1JO	REFERENCE LINE-PASSENGERS LINE	11RZ	PTS. PAS PANEL, VAT BOXES ENT
1JP	REFERENCE LINE-PASSENGERS LINE	11SA	PTS. PAS PANEL, VAT BOXES ENT
1JQ	REFERENCE LINE-PASSENGERS LINE	11SB	PTS. PAS PANEL, VAT BOXES ENT
1JR	REFERENCE LINE-PASSENGERS LINE	11SC	PTS. PAS PANEL, VAT BOXES ENT
1JS	REFERENCE LINE-PASSENGERS LINE	11SD	PTS. PAS PANEL, VAT BOXES ENT
1JT	REFERENCE LINE-PASSENGERS LINE	11SE	PTS. PAS PANEL, VAT BOXES ENT
1JU	REFERENCE LINE-PASSENGERS LINE	11SF	PTS. PAS PANEL, VAT BOXES ENT
1JV	REFERENCE LINE-PASSENGERS LINE	11SG	PTS. PAS PANEL, VAT BOXES ENT
1JW	REFERENCE LINE-PASSENGERS LINE	11SH	PTS. PAS PANEL, VAT BOXES ENT
1JX	REFERENCE LINE-PASSENGERS LINE	11SI	PTS. PAS PANEL, VAT BOXES ENT
1JY	REFERENCE LINE-PASSENGERS LINE	11SJ	PTS. PAS PANEL, VAT BOXES ENT
1JZ	REFERENCE LINE-PASSENGERS LINE	11SK	PTS. PAS PANEL, VAT BOXES ENT
1K	REFERENCE LINE-PASSENGERS LINE	11SL	PTS. PAS PANEL, VAT BOXES ENT
1KA	REFERENCE LINE-PASSENGERS LINE	11SM	PTS. PAS PANEL, VAT BOXES ENT
1KB	REFERENCE LINE-PASSENGERS LINE	11SN	PTS. PAS PANEL, VAT BOXES ENT
1KC	REFERENCE LINE-PASSENGERS LINE	11SO	PTS. PAS PANEL, VAT BOXES ENT
1KD	REFERENCE LINE-PASSENGERS LINE	11SP	PTS. PAS PANEL, VAT BOXES ENT
1KE	REFERENCE LINE-PASSENGERS LINE	11SQ	PTS. PAS PANEL, VAT BOXES ENT
1KF	REFERENCE LINE-PASSENGERS LINE	11SR	PTS. PAS PANEL, VAT BOXES ENT
1KG	REFERENCE LINE-PASSENGERS LINE	11SS	PTS. PAS PANEL, VAT BOXES ENT
1KH	REFERENCE LINE-PASSENGERS LINE	11ST	PTS. PAS PANEL, VAT BOXES ENT
1KI	REFERENCE LINE-PASSENGERS LINE	11SU	PTS. PAS PANEL, VAT BOXES ENT
1KJ	REFERENCE LINE-PASSENGERS LINE	11SV	PTS. PAS PANEL, VAT BOXES ENT
1KK	REFERENCE LINE-PASSENGERS LINE	11SW	PTS. PAS PANEL, VAT BOXES ENT
1KL	REFERENCE LINE-PASSENGERS LINE	11SX	PTS. PAS PANEL, VAT BOXES ENT
1KM	REFERENCE LINE-PASSENGERS LINE	11SY	PTS. PAS PANEL, VAT BOXES ENT
1KN	REFERENCE LINE-PASSENGERS LINE	11SZ	PTS. PAS PANEL, VAT BOXES ENT
1KO	REFERENCE LINE-PASSENGERS LINE	11TA	PTS. PAS PANEL, VAT BOXES ENT
1KP	REFERENCE LINE-PASSENGERS LINE	11TB	PTS. PAS PANEL, VAT BOXES ENT
1KQ	REFERENCE LINE-PASSENGERS LINE	11TC	PTS. PAS PANEL, VAT BOXES ENT
1KR	REFERENCE LINE-PASSENGERS LINE	11TD	PTS. PAS PANEL, VAT BOXES ENT
1KS	REFERENCE LINE-PASSENGERS LINE	11TE	PTS. PAS PANEL, VAT BOXES ENT
1KT	REFERENCE LINE-PASSENGERS LINE	11TF	PTS. PAS PANEL, VAT BOXES ENT
1KU	REFERENCE LINE-PASSENGERS LINE	11TG	PTS. PAS PANEL, VAT BOXES ENT
1KV	REFERENCE LINE-PASSENGERS LINE	11TH	PTS. PAS PANEL, VAT BOXES ENT
1KW	REFERENCE LINE-PASSENGERS LINE	11TI	PTS. PAS PANEL, VAT BOXES ENT
1KX	REFERENCE LINE-PASSENGERS LINE	11TJ	PTS. PAS PANEL, VAT BOXES ENT
1KY	REFERENCE LINE-PASSENGERS LINE	11TK	PTS. PAS PANEL, VAT BOXES ENT
1KZ	REFERENCE LINE-PASSENGERS LINE	11TL	PTS. PAS PANEL, VAT BOXES ENT
1L	REFERENCE LINE-PASSENGERS LINE	11TM	PTS. PAS PANEL, VAT BOXES ENT
1LA	REFERENCE LINE-PASSENGERS LINE	11TN	PTS. PAS PANEL, VAT BOXES ENT
1LB	REFERENCE LINE-PASSENGERS LINE	11TO	PTS. PAS PANEL, VAT BOXES ENT
1LC	REFERENCE LINE-PASSENGERS LINE	11TP	PTS. PAS PANEL, VAT BOXES ENT
1LD	REFERENCE LINE-PASSENGERS LINE	11TQ	PTS. PAS PANEL, VAT BOXES ENT
1LE	REFERENCE LINE-PASSENGERS LINE	11TR	PTS. PAS PANEL, VAT BOXES ENT
1LF	REFERENCE LINE-PASSENGERS LINE	11TS	PTS. PAS PANEL, VAT BOXES ENT
1LG	REFERENCE LINE-PASSENGERS LINE	11TT	PTS. PAS PANEL, VAT BOXES ENT
1LH	REFERENCE LINE-PASSENGERS LINE	11TU	PTS. PAS PANEL, VAT BOXES ENT
1LI	REFERENCE LINE-PASSENGERS LINE	11TV	PTS. PAS PANEL, VAT BOXES ENT
1LJ	REFERENCE LINE-PASSENGERS LINE	11TW	PTS. PAS PANEL, VAT BOXES ENT
1LK	REFERENCE LINE-PASSENGERS LINE	11TX	PTS. PAS PANEL, VAT BOXES ENT
1LL	REFERENCE LINE-PASSENGERS LINE	11TY	PTS. PAS PANEL, VAT BOXES ENT
1LM	REFERENCE LINE-PASSENGERS LINE	11TZ	PTS. PAS PANEL, VAT BOXES ENT
1LN	REFERENCE LINE-PASSENGERS LINE	11UA	PTS. PAS PANEL, VAT BOXES ENT
1LO	REFERENCE LINE-PASSENGERS LINE	11UB	PTS. PAS PANEL, VAT BOXES ENT
1LP	REFERENCE LINE-PASSENGERS LINE	11UC	PTS. PAS PANEL, VAT BOXES ENT
1LQ	REFERENCE LINE-PASSENGERS LINE	11UD	PTS. PAS PANEL, VAT BOXES ENT
1LR	REFERENCE LINE-PASSENGERS LINE	11UE	PTS. PAS PANEL, VAT BOXES ENT
1LS	REFERENCE LINE-PASSENGERS LINE	11UF	PTS. PAS PANEL, VAT BOXES ENT
1LT	REFERENCE LINE-PASSENGERS LINE	11UG	PTS. PAS PANEL, VAT BOXES ENT
1LU	REFERENCE LINE-PASSENGERS LINE	11UH	PTS. PAS PANEL, VAT BOXES ENT
1LV	REFERENCE LINE-PASSENGERS LINE	11UI	PTS. PAS PANEL, VAT BOXES ENT
1LW	REFERENCE LINE-PASSENGERS LINE	11UJ	PTS. PAS PANEL, VAT BOXES ENT
1LX	REFERENCE LINE-PASSENGERS LINE	11UK	PTS. PAS PANEL, VAT BOXES ENT
1LY	REFERENCE LINE-PASSENGERS LINE	11UL	PTS. PAS PANEL, VAT BOXES ENT
1LZ	REFERENCE LINE-PASSENGERS LINE	11UM	PTS. PAS PANEL, VAT BOXES ENT
1M	REFERENCE LINE-PASSENGERS LINE	11UN	PTS. PAS PANEL, VAT BOXES ENT
1MA	REFERENCE LINE-PASSENGERS LINE	11UO	PTS. PAS PANEL, VAT BOXES ENT
1MB	REFERENCE LINE-PASSENGERS LINE	11UP	PTS. PAS PANEL, VAT BOXES ENT
1MC	REFERENCE LINE-PASSENGERS LINE	11UQ	PTS. PAS PANEL, VAT BOXES ENT
1MD	REFERENCE LINE-PASSENGERS LINE	11UR	PTS. PAS PANEL, VAT BOXES ENT
1ME	REFERENCE LINE-PASSENGERS LINE	11US	PTS. PAS PANEL, VAT BOXES ENT
1MF	REFERENCE LINE-PASSENGERS LINE	11UT	PTS. PAS PANEL, VAT BOXES ENT
1MG	REFERENCE LINE-PASSENGERS LINE	11UU	PTS. PAS PANEL, VAT BOXES ENT
1MH	REFERENCE LINE-PASSENGERS LINE	11UV	PTS. PAS PANEL, VAT BOXES ENT
1MI	REFERENCE LINE-PASSENGERS LINE	11UW	PTS. PAS PANEL, VAT BOXES ENT
1MJ	REFERENCE LINE-PASSENGERS LINE	11UX	PTS. PAS PANEL, VAT BOXES ENT
1MK	REFERENCE LINE-PASSENGERS LINE	11UY	PTS. PAS PANEL, VAT BOXES ENT
1ML	REFERENCE LINE-PASSENGERS LINE	11UZ	PTS. PAS PANEL, VAT BOXES ENT
1MM	REFERENCE LINE-PASSENGERS LINE	11VA	PTS. PAS PANEL, VAT BOXES ENT
1MN	REFERENCE LINE-PASSENGERS LINE	11VB	PTS. PAS PANEL, VAT BOXES ENT
1MO	REFERENCE LINE-PASSENGERS LINE	11VC	PTS. PAS PANEL, VAT BOXES ENT
1MP	REFERENCE LINE-PASSENGERS LINE	11VD	PTS. PAS PANEL, VAT BOXES ENT
1MQ	REFERENCE LINE-PASSENGERS LINE	11VE	PTS. PAS PANEL, VAT BOXES ENT
1MR	REFERENCE LINE-PASSENGERS LINE	11VF	PTS. PAS PANEL, VAT BOXES ENT
1MS	REFERENCE LINE-PASSENGERS LINE	11VG	PTS. PAS PANEL, VAT BOXES ENT
1MT	REFERENCE LINE-PASSENGERS LINE	11VH	PTS. PAS PANEL, VAT BOXES ENT
1MU	REFERENCE LINE-PASSENGERS LINE	11VI	PTS. PAS PANEL, VAT BOXES ENT
1MV	REFERENCE LINE-PASSENGERS LINE	11VJ	PTS. PAS PANEL, VAT BOXES ENT
1MW	REFERENCE LINE-PASSENGERS LINE	11VK	PTS. PAS PANEL, VAT BOXES ENT
1MX	REFERENCE LINE-PASSENGERS LINE	11VL	PTS. PAS PANEL, VAT BOXES ENT
1MY	REFERENCE LINE-PASSENGERS LINE	11VM	PTS. PAS PANEL, VAT BOXES ENT
1MZ	REFERENCE LINE-PASSENGERS LINE	11VN	PTS. PAS PANEL, VAT BOXES ENT
1N	REFERENCE LINE-PASSENGERS LINE	11VO	PTS. PAS PANEL, VAT BOXES ENT
1NA	REFERENCE LINE-PASSENGERS LINE	11VP	PTS. PAS PANEL, VAT BOXES ENT
1NB	REFERENCE LINE-PASSENGERS LINE	11VQ	PTS. PAS PANEL, VAT BOXES ENT
1NC	REFERENCE LINE-PASSENGERS LINE	11VR	PTS. PAS PANEL, VAT BOXES ENT
1ND	REFERENCE LINE-PASSENGERS LINE	11VS	PTS. PAS PANEL, VAT BOXES ENT
1NE	REFERENCE LINE-PASSENGERS LINE	11VT	PTS. PAS PANEL, VAT BOXES ENT
1NF	REFERENCE LINE-PASSENGERS LINE	11VU	PTS. PAS PANEL, VAT BOXES ENT
1NG	REFERENCE LINE-PASSENGERS LINE	11VV	PTS. PAS PANEL, VAT BOXES ENT
1NH	REFERENCE LINE-PASSENGERS LINE	11VW	PTS. PAS PANEL, VAT BOXES ENT
1NI	REFERENCE LINE-PASSENGERS LINE	11VX	PTS. PAS PANEL, VAT BOXES ENT
1NJ	REFERENCE LINE-PASSENGERS LINE	11VY	PTS. PAS PANEL, VAT BOXES ENT
1NK	REFERENCE LINE-PASSENGERS LINE	11VZ	PTS. PAS PANEL, VAT BOXES ENT
1NL	REFERENCE LINE-PASSENGERS LINE	11WA	PTS. PAS PANEL, VAT BOXES ENT
1NM	REFERENCE LINE-PASSENGERS LINE	11WB	PTS. PAS PANEL, VAT BOXES ENT
1NN	REFERENCE LINE-PASSENGERS LINE	11WC	PTS. PAS PANEL, VAT BOXES ENT
1NO	REFERENCE LINE-PASSENGERS LINE	11WD	PTS. PAS PANEL, VAT BOXES ENT
1NP	REFERENCE LINE-PASSENGERS LINE	11WE	PTS. PAS PANEL, VAT BOXES ENT
1NQ	REFERENCE LINE-PASSENGERS LINE	11WF	PTS. PAS PANEL, VAT BOXES ENT
1NR	REFERENCE LINE-PASSENGERS LINE	11WG	PTS. PAS PANEL, VAT BOXES ENT
1NS	REFERENCE LINE-PASSENGERS LINE	11WH	PTS. PAS PANEL, VAT BOXES ENT
1NT	REFERENCE LINE-PASSENGERS LINE	11WI	PTS. PAS PANEL, VAT BOXES ENT
1NU	REFERENCE LINE-PASSENGERS LINE	11WJ	PTS. PAS PANEL, VAT BOXES ENT
1NV	REFERENCE LINE-PASSENGERS LINE	11WK	PTS. PAS PANEL, VAT BOXES ENT
1NW	REFERENCE LINE-PASSENGERS LINE	11WL	PTS. PAS PANEL, VAT BOXES ENT
1NX	REFERENCE LINE-PASSENGERS LINE	11WM	PTS. PAS PANEL, VAT BOXES ENT
1NY	REFERENCE LINE-PASSENGERS LINE	11WN	PTS. PAS PANEL, VAT BOXES ENT
1NZ	REFERENCE LINE-PASSENGERS LINE	11WO	PTS. PAS PANEL, VAT BOXES ENT
1O	REFERENCE LINE-PASSENGERS LINE	11WP	PTS. PAS PANEL, VAT BOXES ENT
1OA	REFERENCE LINE-PASSENGERS LINE	11WQ	PTS. PAS PANEL, VAT BOXES ENT
1OB	REFERENCE LINE-PASSENGERS LINE	11WR	PTS. PAS PANEL, VAT BOXES ENT
1OC	REFERENCE LINE-PASSENGERS LINE	11WS	PTS. PAS PANEL, VAT BOXES ENT
1OD	REFERENCE LINE-PASSENGERS LINE	11WT	PTS. PAS PANEL, VAT BOXES ENT
1OE	REFERENCE LINE-PASSENGERS LINE	11WU	PTS. PAS PANEL, VAT BOXES ENT
1OF	REFERENCE LINE-PASSENGERS LINE	11WV	PTS. PAS PANEL, VAT BOXES ENT
1OG	REFERENCE LINE-PASSENGERS LINE	11WW	PTS. PAS PANEL, VAT BOXES ENT
1OH	REFERENCE LINE-PASSENGERS LINE	11WX	PTS. PAS PANEL, VAT BOXES ENT
1OI	REFERENCE LINE-PASSENGERS LINE	11WY	PTS. PAS PANEL, VAT BOXES ENT
1OJ	REFERENCE LINE-PASSENGERS LINE	11WZ	PTS. PAS PANEL, VAT BOXES ENT
1OK	REFERENCE LINE-PASSENGERS LINE	11XA	PTS. PAS PANEL, VAT BOXES ENT
1OL	REFERENCE LINE-PASSENGERS LINE	11XB	PTS. PAS PANEL, VAT BOXES ENT
1OM	REFERENCE LINE-PASSENGERS LINE	11XC	PTS. PAS PANEL, VAT BOXES ENT
1ON	REFERENCE LINE-PASSENGERS LINE	11XD	PTS. PAS PANEL, VAT BOXES ENT
1OO	REFERENCE LINE-PASSENGERS LINE	11XE	PTS. PAS PANEL, VAT BOXES ENT
1OP	REFERENCE LINE-PASSENGERS LINE	11XF	PTS. PAS PANEL, VAT BOXES ENT
1OQ	REFERENCE LINE-PASSENGERS LINE	11XG	PTS. PAS PANEL, VAT BOXES ENT
1OR	REFERENCE LINE-PASSENGERS LINE	11XH	PTS. PAS PANEL, VAT BOXES ENT
1OS	REFERENCE LINE-PASSENGERS LINE	11XI	PTS. PAS PANEL, VAT BOXES ENT
1OT	REFERENCE LINE-PASSENGERS LINE	11XJ	PTS. PAS PANEL, VAT BOXES ENT
1OU	REFERENCE LINE-PASSENGERS LINE	11XK	PTS. PAS PANEL, VAT BOXES ENT
1OV	REFERENCE LINE-PASSENGERS LINE	11XL	PTS. PAS PANEL, VAT BOXES ENT
1OW	REFERENCE LINE-PASSENGERS LINE	11XM	PTS. PAS PANEL, VAT BOXES ENT
1OX	REFERENCE LINE-PASSENGERS LINE	11XN	PTS. PAS PANEL, VAT BOXES ENT
1OY	REFERENCE LINE-PASSENGERS LINE	11XO	PTS. PAS PANEL, VAT BOXES ENT
1OZ	REFERENCE LINE-PASSENGERS LINE	11XP	PTS. PAS PANEL, VAT BOXES ENT
1P	REFERENCE LINE-PASSENGERS LINE	11XQ	PTS. PAS PANEL, VAT BOXES ENT
1PA	REFERENCE LINE-PASSENGERS LINE	11XR	PTS. PAS PANEL, VAT BOXES ENT
1PB	REFERENCE LINE-PASSENGERS LINE	11XS	PTS. PAS PANEL, VAT BOXES ENT
1PC	REFERENCE LINE-PASSENGERS LINE	11XT	PTS. PAS PANEL, VAT BOXES ENT
1PD	REFERENCE LINE-PASSENGERS LINE	11XU	PTS. PAS PANEL, VAT BOXES ENT
1PE	REFERENCE LINE-PASSENGERS LINE	11XV	PTS. PAS PANEL, VAT BOXES ENT
1PF	REFERENCE LINE-PASSENGERS LINE	11XW	PTS. PAS PANEL, VAT BOXES ENT
1PG	REFERENCE LINE-PASSENGERS LINE	11XX	PTS. PAS PANEL, VAT BOXES ENT
1PH	REFERENCE LINE-PASSENGERS LINE	11XY	PTS. PAS PANEL, VAT BOXES ENT
1PI	REFERENCE LINE-PASSENGERS LINE	11XZ	PTS. PAS PANEL, VAT BOXES ENT
1PJ	REFERENCE LINE-PASSENGERS LINE	11YA	PTS. PAS PANEL, VAT BOXES ENT
1PK	REFERENCE LINE-PASSENGERS LINE	11YB	PTS. PA

NO.	SYSTEM
0	GRD BATTERY A TO GRD STUD
0	GRD BATTERY A1 TO GRD STUD
0	GRD STARTER MOTOR TO GRD STUD
0	FJP - GRD
0	RJB - GRD
0	BJP - GRD
0A	RJB - GRD
0A	FR SERV JCT BOX - GRD
0B	FJP - GRD
OB	RJB - GRD
OB	BOOSTER BLK TO GRD STUD
0BE	0V BATTERY MONITOR
0C	RJB - GRD
0S	AMPLI - GRD
0CR	24V DISC. SW RLY GRD SIGNAL
0DS	24V DISC. SW RLY GRD SIGNAL
0D	RJB - GRD
0E	RJB - GRD
0F	RJB - GRD
0H	FJP - GRD
0M	BACK-UP MONITOR
0MR	24V DISC. SW RLY GRD SIGNAL
0MS	24V DISC. SW RLY GRD SIGNAL
0P	RJB - GRD
0R	SOUND SYSTEM GRD
0SA	FJB - BATTERY GRD-SOUND SYS.
0SE	FJB - BATTERY GRD-SOUND SYS.
0SF	FJB - BATTERY GRD-SOUND SYS.
0S2	RADIO - BATTERY GRD
0S3	VIDEO - BATTERY GRD
0SS	SOUND SYSTEM - BATTERY GRD
00SS	SOUND SYSTEM - BATTERY GRD
0T	FJP - GRD
0T	FR SERVICE CPT-GRD
0V	FJP - GRD
0VA	GRD STUD TO BAT.EQUALIZER
0W	FJP - GRD
0W	WORLD TRANSM. VIM CHASSIS GRD
0WA	PRE_HEAT WATER HEATER WEBASTO
0WB	PRE_HEAT WATER HEATER WEBASTO
0X	RJB - GRD
0Y	ABS SYSTEM-GRD
0Y1	ABS SYSTEM-GRD
2	A/C & HEAT SYSTEM-CONDENSER
2A	A/C & HEAT SYSTEM-CONDENSER
2C	A/C & HEAT SYSTEM-CONDENSER
2D	A/C & HEAT SYSTEM-CONDENSER
2E	A/C & HEAT SYSTEM-CONDENSER
3	A/C & HEAT SYSTEM-EVAPORATOR
3A	A/C & HEAT SYSTEM-EVAPORATOR
3B	A/C & HEAT SYSTEM-EVAPORATOR
4	CHIME-PASSENGER & HOSTESS
4A	CHIME-PASSENGER & HOSTESS
4B	CHIME-PASSENGER & HOSTESS
4C	CHIME-PASSENGER & HOSTESS
4D	CHIME-PASSENGER & HOSTESS
4E	CHIME-PASSENGER & HOSTESS
5	INTERIOR LTS-EMERGENCY EXIT LTS
5A	INTERIOR LTS-EMERGENCY EXIT LTS
5C	INTERIOR LTS-EMERGENCY EXIT LTS
6	INTERIOR LTS-AISLE LTS

NO.	SYSTEM
7	INTERIOR LTS-STEPWELL LTS
8A	INTERIOR LTS-AISLE & EMERG. LTS
8B	INTERIOR LTS-AISLE & EMERG. LTS
9	INTERIOR LTS-ENGINE CPT
9	INTERIOR LTS-RR JCT BOX
9	INTERIOR LTS-FR SERVICE CPT
9	INTERIOR LTS-FR SERVICE CPT
9A	INTERIOR LTS-FR JCT PANEL
9E	CHIME-PASSENGER & HOSTESS
10	A/C & HEAT SYSTEM-LO PRES.
10	INTERIOR LTS-LUGGAGE CPT
10A	INTERIOR LTS-LUGGAGE CPT
10A	A/C AUXILIARY-CLUTCH
10B	INTERIOR LTS-LUGGAGE CPT
10C	INTERIOR LTS-LUGGAGE CPT
10D	INTERIOR LTS-LUGGAGE CPT
11	FR. DESTINATION SIGN
11A	FR. DESTINATION SIGN
11B	FR. DESTINATION SIGN
11C	FR. DESTINATION SIGN
11D	FR. DESTINATION SIGN
11E	FR. DESTINATION SIGN
11K	FR. DESTINATION SIGN
11P	FR. DESTINATION SIGN
12	12V BATTERY TO JCT BLOCK
12	12V VIDEO SYSTEM
12A	FR JCT PANEL 12V DISC SW
12A	RR JCT BOX 12V DISC SW
12B	FR JCT PANEL 12V DISC SW
12BE	12V BATTERY MONITOR
12C	RR JCT BOX 12V DISC SW
12D	FR & RR JCT PANEL 12V HOT WIRE
12E	FR JCT PANEL 12V DISC SW
12F	RR JCT BOX 12V DISC SW
12G	FR JCT PANEL 12V DISC SW
12I	FR JCT PANEL 12V IGNITION
12IF	FR JCT PANEL 12V IGNITION
12IM	BACK-UP MONITOR
12P	FR & RR JCT PANEL 12V DISC SW
12P	12V VIDEO SYSTEM
12S	12V BATTERY-SOUND SYSTEM RADIO
12SA	12V BATTERY-SOUND SYSTEM
12SB	12V BATTERY-SOUND SYSTEM
12SC	12V BATTERY-SOUND SYSTEM
12SE	12V BATTERY-SOUND SYSTEM
12SF	12V BATTERY-SOUND SYSTEM
12SS	12V BATTERY-SOUND SYSTEM
12S1	12V BATTERY-SOUND SYSTEM RADIO
12S2	12V BATTERY-SOUND SYSTEM RADIO
12T	RR JCT BOX 12V DISC SW
12VD	FR & RR JCT BOX 12V HOT WIRE
12VO	12V BATTERY POST TO EQUALIZER
12VF	12V FR JCT PANEL
12VI	RR JCT BOX 12V IGNITION
12VR	RR JCT BOX 12V DISC SW
12W	12V HOT WIRE DDEC III FEED
13A	ALARM & SIGNAL-LO AIR PRIM.
13B	ALARM & SIGNAL-LO AIR SEC.
14	LAVATORY-FLUSHING SW
15	EXTERIOR LTS-MULTI FUNC LEVEL
15	ALARM & SIGNAL-DIF. OIL TEMP

CIRCUIT NUMBER CODE PAGE E : 1

NO.	SYSTEM
15	WIPER & WASHER SYSTEM
15A	ALARM & SIGNAL-DIF. OIL TEMP
16	SPEEDOMETER SIGNAL (+)
16T	SPEED SW SIGNAL IN (+)
17	EXTERIOR LTS-FLASHER UNIT
17A	EXTERIOR LTS-FLASHER UNIT
18	ETHER COLD START SYST.
20	SPEEDOMETER SIGNAL (-)
20T	SPEED SW SIGNAL IN (-)
21	EXTERIOR LTS-DIRECTIONNAL LH
21A	EXTERIOR LTS-DIRECTIONNAL LH
21B	EXTERIOR LTS-DIRECTIONNAL LH
21H	EXTERIOR LTS-HAZARD SIGNAL
23	EXTERIOR LTS-DIRECTIONNAL RH
23A	EXTERIOR LTS-DIRECTIONNAL RH
23B	EXTERIOR LTS-DIRECTIONNAL RH
23E	KNEELING-RH EXT. FLASHING LTS
23F	KNEELING-RH EXT. FLASHING LTS
23H	EXTERIOR LTS-HAZARD SIGNAL
24	BATTERY TO 24V CUT OUT RLY
24A	BOOSTER TO 24V DISC SW
24A	RR JCT BOX 24V DISC SW
24A	FR JCT PANEL 24V DISC SW
24B	FR JCT PANEL 24V DISC SW
24BE	BATTERY MONITOR
24C	FR JCT PANEL 24V DISC SW
24D	FR & RR JCT PANEL 24V HOT WIRE
24DA	A/C & HEAT. SYS.-WATER PUMP
24E	24V CUT OUT RLY TO 24V DIST.
24F	FR JCT PANEL 24V DISC SW
24I	FR JCT PANEL 24V IGNITION
24I	RR JCT BOX 24V IGNITION
24IA	FR JCT PANEL 24V IGNITION
24IB	FR JCT PANEL 24V IGNITION
24K	FR JCT PANEL 24V DISC SW
24P	FR JCT PANEL 24V DISC SW
24R	BATT. CPT TO START RLY
24S	RR JCT BOX 24V DISC SW
24S1	24V BATTERY-SOUND SYSTEM
24S2	24V BATTERY-SOUND SYSTEM
24S3	24V BATTERY-SOUND SYSTEM VIDEO
24S4	24V BATTERY-SOUND SYSTEM VIDEO
24SB	24V BATTERY-SOUND SYSTEM
24SS	24V BATTERY-SOUND SYSTEM
24T	RR JCT BOX 24V DISC SW
24VA	24V BATTERY POST TO EQUALIZER
24VI	RR JCT BOX 24V IGNITION
24VIF	FR JCT PANEL 24V IGNITION
24VD	FR & RR JCTY BOX 24V HOT WIRE
24VF	FR JCT PANEL 24V DISC SW
24VR	RR JCT PANEL 24V DISC SW
24X	24V SPEED SW & KNEELING
25	12VAC GEN RLY ON SIGNAL
25A	NOT GENERATOR-WARNING LT
25B	EXTERIOR LTS-DAYTIME RUN LTS
25L	12VAC GEN RLY ON SIGNAL
27	LAVATORY-EMERGENCY BUZZER
28	A/C & HEAT SYSTEM-WARNING LT
29	A/C & HEAT SYSTEM-DRIVER'S HTR
29A	A/C & HEAT SYSTEM-DRIVER'S HTR
29B	A/C & HEAT SYSTEM-DRIVER'S HTR

NO.	SYSTEM
31A	A/C & HEAT SYSTEM-PRESSURE SW
31B	A/C & HEAT SYSTEM-PRESSURE SW
31B	WIPER & WASHER SYSTEM
30	GALLEY SYSTEM
30A	GALLEY SYSTEM
32B	EXTERIOR LTS-BACK-UP
32	EXTERIOR LTS-BACK-UP
32D	BACK-UP MONITOR
32D	BACK-UP ALARM
32M	BACK-UP MONITOR
34	A/C & HEAT SYSTEM-CONDENSER
34A	A/C & HEAT SYSTEM-CONDENSER
34B	A/C & HEAT SYSTEM-CONDENSER
34C	A/C & HEAT SYSTEM-CONDENSER
34D	A/C & HEAT SYSTEM-CONDENSER
34E	A/C & HEAT SYSTEM-CONDENSER
34F	A/C & HEAT SYSTEM-CONDENSER
34G	A/C & HEAT SYSTEM-CONDENSER
34H	A/C & HEAT SYSTEM-CONDENSER
34J	A/C & HEAT SYSTEM-CONDENSER
35	INTERIOR LTS-STEPWELL LTS
36	ENGINE BRAKE SYSTEM & RETARDER
36A	ENGINE BRAKE SYSTEM
36C	ENGINE BRAKE SYSTEM-ABS CANCEL
37	LAVATORY-OCCUPIED LTS
38	FUEL WATER FILTER
38	INTERIOR LTS-24V FLUORESCENT
38A	INTERIOR LTS-24V FLUORESCENT
38B	INTERIOR LTS-24V FLUORESCENT
38C	INTERIOR LTS-24V FLUORESCENT
38E	INTERIOR LTS-24V FLUORESCENT
38F	INTERIOR LTS-24V FLUORESCENT
39	INTERIOR LTS-DRIVER'S LTS
39A	INTERIOR LTS-DRIVER'S LTS
39B	INTERIOR LTS-DRIVER'S LTS
44	EXTERIOR LTS-FOG
44A	EXTERIOR LTS-FOG
44B	EXTERIOR LTS-FOG
44C	EXTERIOR LTS-FOG & HAZARD SW
45	A/C & HEAT SYSTEM-DRIVER'S CTRL
45	A/C & HEAT SYSTEM-WATER VALVE
45A	A/C & HEAT SYSTEM-WATER VALVE
45B	A/C & HEAT SYSTEM-WATER VALVE
45E	A/C & HEAT SYSTEM-BYPASS VALVE
46	EXTERIOR LTS-MARKER
46A	EXTERIOR LTS-MARKER
46B	EXTERIOR LTS-MARKER
46C	EXTERIOR LTS-MARKER
47	A/C & HEAT SYSTEM-DRIVER'S HTR
47	A/C & HEAT SYSTEM-FULL AIR
48	INTERIOR LTS-STEPWELL LTS
51	INTERIOR LTS-READING LTS
52	ALARM & SIGNAL-ELEC. HORN
52A	ALARM & SIGNAL-ELEC. HORN
53	ALARM & SIGNAL-ELEC. HORN
50B	WIPER & WASHER SYSTEM
53C	WIPER & WASHER SYSTEM
53E	WIPER & WASHER SYSTEM
53F	WIPER & WASHER SYSTEM
53J	WIPER & WASHER SYSTEM
54	SPARE-F.J.B. TO FR ROOF

NO.	SYSTEM
55	EXTERIOR LTS-HI BEAM
56	TRANSM. OIL TEMP GAUGE
57	EXTERIOR LTS-HI BEAM
57	A/C & HEAT SYSTEM-WATER PUMP
57A	EXTERIOR LTS-HI BEAM
57A	A/C & HEAT SYSTEM-WATER PUMP
57B	A/C & HEAT SYSTEM-WATER PUMP
57C	PRE-HEAT WATER HEATER
57D	PRE-HEAT WATER HEATER
57E	PRE-HEAT WTR HTR PUMP
57F	PRE-HEAT WATER HEATER
57W	PRE-HEAT WATER HEATER
58	EXTERIOR LTS-LO BEAM
58A	EXTERIOR LTS-LO BEAM
58B	EXTERIOR LTS-LO BEAM
58E	EXTERIOR LTS-LO BEAM
59A	ENGINE BRAKE SYSTEM
60	EXTERIOR LTS-RR & FR ROOF GRD
61	EXTERIOR LTS-24V FEED SW
61A	EXTERIOR LTS-HEAD SIGNAL
62	LAVATORY-OCCUPIED LTS
62B	LAVATORY-OCCUPIED LTS
63	EXTERIOR LTS-CLEARANCE
63A	EXTERIOR LTS-CLEARANCE
63B	EXTERIOR LTS-CLEARANCE
63C	EXTERIOR LTS-MARKER SIGNAL
63D	EXTERIOR LTS-MARKER & TAIL
63E	EXTERIOR LTS-CLEARANCE
63F	EXTERIOR LTS-MARKER BLINKER
63H	EXTERIOR LTS-TAIL
63K	EXTERIOR LTS-TAIL
64	DIFFERENTIAL OIL TEMP GAUGE
65A	PRE-HEAT WATER HEATER
66B	RR JCT BOX 12V HOT WIRE
67	A/C & HEAT SYSTEM
67A	A/C & HEAT SYSTEM
67B	A/C & HEAT SYSTEM
67C	A/C & HEAT SYSTEM
69	RR JCT BOX 24V HOT WIRE
70	INTERIOR LTS-HAT RACK LTS
70A	INTERIOR LTS-HAT RACK LTS
70C	INTERIOR LTS-HAT RACK LTS
71	A/C AUXILIARY-DASH SW
71B	R J B GRD-BACK UP ALARM
71H	A/C AUXILIARY-DASH SW
72A	A/C AUXILIARY-DASH SW
72H	A/C AUXILIARY-DASH SW
73	LAVATORY-NIGHT LTS
74	INTERIOR LTS-READING LTS
74A	INTERIOR LTS-READING LTS
74B	INTERIOR LTS-READING LTS
75	INTERIOR LTS-READING LTS
76	FUEL TANK GAUGE
76C	LOW FUEL LT
76L	LOW FUEL LT
76M	FUEL PRIME PUMP
76P	FUEL PRIME PUMP
77H	A/C & HEAT SYSTEM-CLUTCH
77B	A/C AUXILIARY-LIQ. SOL.
77C	A/C AUXILIARY-LIQ. SOL.
77H	A/C & HEAT SYSTEM-FAN CLUTCH
80	WORLD TRANSM-NEUTRAL SIGNAL GRD
81	EXTERIOR LTS-STOP SW
82	EXTERIOR LTS-STOP SIGNAL
82A	EXTERIOR LTS-STOP SIGNAL
82B	EXTERIOR LTS-STOP LTS
82K	EXTERIOR LTS-STOP RETARDER
82L	EXTERIOR LTS-STOP LTS
82R	EXTERIOR LTS-STOP LTS
83	ENGINE CTR-MAST KEY SW ACCES
84	ENGINE CTR-MAST KEY SW START
84A	ENGINE CTR-MAST KEY SW START
85	ENGINE CTR-MAST KEY SW IGN
85A	24V IGN DASH INSTRUMENTATION
85B	24V IGN DASH INSTRUMENTATION
85C	ENGINE CTR-24V IGNITION
85C	PARKING BRAKE SWITCH
86A	ENGINE CTR-STARTER SOL SIGN
85Y	ABS-WARNING LT
87B	ENGINE CTR-24V IGNITION
85X	ABS-24V IGN
86	ENGINE CTR-STARTER SOL SIGN
85F	LO AIR SONALERT
85W	ABS-24V IGN
88	ENGINE CTR-RR START SIGNAL
89	ENGINE CTR-RR START SIGNAL
90	A/C & HEAT SYSTEM-WATER PUMP
90	GALLEY SYSTEM
90	DIGITAL CLOCK
90A	GALLEY SYSTEM
90B	FR JCT PANEL 24V DISC SW
90B	ENGINE CTR-MAST KEY SW FEED
90B	GALLEY SYSTEM
90C	ALARM & SIGNAL-FIRE DETECTOR
90E	GALLEY SYSTEM
90F	GALLEY SYSTEM
91	PARKING BRAKE SW SIGNAL
91A	PARKING BRAKE SW SIGNAL
91B	EXTERIOR LTS-RUN LTS CANCEL
91B	DDEC III-FAST IDLE SIGNAL
91C	PRE-HEAT WATER HEATER
92	BATTERY MONITOR-CHECK BALANCE
92A	BATTERY MONITOR-CHECK BALANCE
93	BATTERY MONITOR-CHECK LO/HI
93A	BATTERY MONITOR-CHECK LO/HI
94	HIGH BUOY SYSTEM
94A	HIGH BUOY SYSTEM
95	ENGINE BRAKE & RETARDER SYSTEM
95A	ENGINE BRAKE & RETARDER SYSTEM
95B	ENGINE BRAKE & RETARDER SYSTEM
97	TACHOMETER (-)
99	A/C AUXILIARY-DASH SW
100	INTERIOR LTS-GENERAL LTS
100A	INTERIOR LTS-GENERAL LTS
100B	INTERIOR LTS-GENERAL LTS
100C	INTERIOR LTS-GENERAL LTS
101	WORLD TRANSM-LO SIGNAL SOL. LO
102	A/C JCT BOX-24V DISC. SW
102	24V STARTER TO GENERATOR
102	WORLD TRANSM-SOL. GRD 1
102	WORLD TRANSM-SOL. C3
104	WORLD TRANSM-SOL. FORWARD
105	WORLD TRANSM-RETARDER & SUMP
105W	WORLD TRANSM-RETARDER & SUMP
106	WORLD TRANSM-OIL LEVEL HI
107	CHARG SYST-VOLTAGE REGUL. "F"
107	WORLD TRANSM-LOCKUP SOL. HI
108	WORLD TRANSM-REMOTE PWR WAKE UP
108	24V DISC SW TO 24V SYSTEM
108A	CHARG SYST-VOLTAGE REGUL. "B"
109	WORLD TRANSM-RET. SOL. LO
110	ALARM & SIGNAL-WATER TEMP
110	WORLD TRANSM-LOCKUP SOL. LO
111	BATTERY GRD
111	WORLD TRANSM-SOL. C6
112	WORLD TRANSM-SPARE OUTPUT (+)
113	ALARM & SIGNAL-OIL PRESS
113	WORLD TRANSM-REVERSE WARNING
114	WORLD TRANSM-SPARE OUTPUT (-)
114	INTERIOR LTS-DASH LT REGUL.
114A	INTERIOR LTS-DASH LT
114B	INTERIOR LTS-DASH LT REGUL.
114C	INTERIOR LTS-DASH LT
115	ALARM & SIGNAL-TAG PRESS
115	DDEC III-COOLANT LEVEL
115	WORLD TRANSM-DO NOT SHIFT SIGNAL
115A	ALARM & SIGNAL-TAG PRESS
115B	ALARM & SIGNAL-TAG PRESS
115C	DDEC III-COOLANT LEVEL
115W	WORLD TRANSM-DO NOT SHIFT SIGNAL
116	WORLD TRANSM-LO SIGNAL SOL. HI
116	A/C & HEAT SYSTEM-DRIVER'S HTR
116A	A/C & HEAT SYSTEM-DRIVER'S HTR
116B	A/C & HEAT SYSTEM-DRIVER'S HTR
117	WORLD TRANSM-SPARE INPUT (-)
117	ALARM & SIGNAL-TRANSM OIL TEMP
117A	ALARM & SIGNAL-TRANSM OIL TEMP
118	WORLD TRANSM-SPARE INPUT (+)
119	CHIME-HOSTESS & PASSENGER
119	WORLD TRANSM-ENG BRK INPUT (+)
119A	CHIME-HOSTESS & PASSENGER
119B	CHIME-HOSTESS & PASSENGER
120	12V HOT WIRE
120	WORLD TRANSM-SOL. C1
120D	12V HOT WIRE
120Y	VIDEO SYSTEM
120Z	VIDEO SYSTEM
121	WORLD TRANSM-SOL. GRD 2
121	CIGAR LIGHTER
122	A/C & HEAT SYSTEM-DRIVER'S HTR
122	A/C & HEAT SYSTEM-FRESH AIR
122	WORLD TRANSM-SOL. GRD 4
123	WORLD TRANSM-NEUTRAL START
123	ALARM & SIGNAL-FIRE DETECTOR
123A	ALARM & SIGNAL-FIRE DETECTOR
124	WORLD TRANSM-THROTTLE (HI)
125	LAVATORY-FAN
125	WORLD TRANSM-RETARDER INDICATOR
125W	WORLD TRANSM-RETARDER INDICATOR
126	WORLD TRANSM-LUBE PRESS SW.
126	KNEELING SYSTEM
126A	KNEELING SYSTEM
126B	KNEELING SYSTEM
126C	KNEELING SYSTEM
126G	KNEELING SYSTEM
126H	KNEELING SYSTEM
127	WORLD TRANSM-RETARDER FEED SOL.
127	PRE-HEAT WATER HEATER
127A	PRE-HEAT WATER HEATER
127B	PRE-HEAT WATER HEATER
127W	PRE-HEAT WATER HEATER
127X	PRE-HEAT WATER HEATER
128	WORLD TRANSM-SOL. C2
128A	PRE-HEAT WATER HEATER
128B	PRE-HEAT WATER HEATER
128C	PRE-HEAT WATER HEATER
128D	PRE-HEAT WATER HEATER
128E	PRE-HEAT WATER HEATER
128F	PRE-HEAT WATER HEATER
128W	PRE-HEAT WATER HEATER
128X	PRE-HEAT WATER HEATER
129	WORLD TRANSM-SOL. C5
129	PRE-HEAT WATER HEATER
129A	PRE-HEAT WATER HEATER
129B	PRE-HEAT WATER HEATER
130	WORLD TRANSM-SOL. GRD 3
130A	A/C & HEAT SYSTEM-EVAPORATOR
130	A/C & HEAT SYSTEM-EVAPORATOR
131	24V DISC SW TO FR JCT PANEL
131	WORLD TRANSM-SOL. C4
132	WORLD TRANSM-ENG BRK OUTPUT (-)
132W	WORLD TRANSM-ENG BRK OUTPUT (-)
133	WORLD TRANSM-RET. ACTUATOR HI
133	GALLEY SYSTEM-CONTAINER RH
133A	GALLEY SYSTEM-CONTAINER RH
134	WORLD TRANSM-RET. APPLY SOL. HI
134	GALLEY SYSTEM-CONTAINER RH
134A	GALLEY SYSTEM-CONTAINER RH
135	WORLD TRANSM-ANALOG GRD
135	A/C AUXILIARY-FAN
135A	A/C AUXILIARY-FAN
135B	A/C AUXILIARY-COIL SENSING
135C	WORLD TRANSM-RETARDER TEMP
135D	WORLD TRANSM-RETARDER RES MOD
136	GALLEY SYSTEM-LAMP
136	WORLD TRANSM-ECU POWER
136V	WORLD TRANSM-12V BATTERY
136W	WORLD TRANSM-12V BATTERY
136X	WORLD TRANSM-12V BATTERY
137	WORLD TRANSM-RETARDER
137	RR VIEW MIRROR
137A	RR VIEW MIRROR
138	WORLD TRANSM-RETARDER TEMP
138	ABS SYSTEM
138	A/C AUXILIARY-FAN
138A	ABS SYSTEM
138A	A/C AUXILIARY-FAN
139	ABS SYSTEM
139	A/C AUXILIARY-FAN
139	WORLD TRANSM-OUTPUT SPEED HI
139A	A/C AUXILIARY-FAN

NO.	SYSTEM
140	A/C AUXILIARY-SHUTTER
140	WORLD TRANSM-OUTPUT SPEED LO
140	ABS SYSTEM
141	ABS SYSTEM
141	WORLD TRANSM-ENGINE SPEED HI
142	WORLD TRANSM-SERIAL COM. A
142	ABS SYSTEM
143	ABS SYSTEM
143A	ABS SYSTEM
143	WORLD TRANSM-ECU BATTERY GRD
143W	WORLD TRANSM-BATTERY GRD
143X	WORLD TRANSM-BATTERY GRD
144	WORLD TRANSM-ECU CHASSIS GRD
144	ABS SYSTEM
144A	ABS SYSTEM
145	ABS SYSTEM
146	ABS SYSTEM
146	WORLD TRANSM-IGNITION SENSE
146W	WORLD TRANSM-12V IGNITION
146X	WORLD TRANSM-12V IGNITION
147	WORLD TRANSM-OIL TEMP
147	ABS SYSTEM
147	ETHER COLD START
147A	ETHER COLD START
148	ABS SYSTEM
148	WORLD TRANSM-OUTPUT SPEED LO
149	WORLD TRANSM-TURBINE SPEED HI
149	ABS SYSTEM
149A	ABS SYSTEM
150	ABS SYSTEM-SPARE
150	WORLD TRANSM-ENGINE SPEED LO
150	DDEC III-ECM BATTERY GRD
150A	DDEC III-ECM BATTERY GRD
151	DDEC III-ECM BATTERY GRD
151	WORLD TRANSM-SERIAL COM. B
151	ABS SYSTEM-SPARE
152	ABS SYSTEM-SPARE
153	ABS SYSTEM
153	WORLD TRANSM-SPARE INPUT (-)
154	WORLD TRANSM-ABS RETARDER INPUT
155	WORLD TRANSM-SPARE INPUT (-)
155	ABS SYSTEM
156	WORLD TRANSM-THROTTLE POS.
156	ABS SYSTEM
156A	ABS SYSTEM
156C	ABS SYSTEM
156W	ABS SYSTEM
157	WORLD TRANSM-SPEEDOMETER SIGNAL
157	ABS SYSTEM
157A	ABS SYSTEM
157B	ABS SYSTEM
157C	ABS SYST.-CANCEL SEC. BRK
158	WORLD TRANSM-DIMMER
160	WORLD TRANSM-SER. INTERFACE (-)
161	WORLD TRANSM-SIGNAL GRD
161B	WORLD TRANSM-SIGNAL GRD
162	WORLD TRANSM-PRESS. SW C3
163	WORLD TRANSM-RETARDER ENABLE
164	WORLD TRANSM-RET. ACTUATOR SIGN

NO.	SYSTEM
165	WORLD TRANSM-OIL LEVEL SIGNAL
168	WORLD TRANSM-SER. INTERFACE (+)
170C	LUGGAGE DOOR LOCK
170D	LUGGAGE DOOR LOCK
170E	LUGGAGE DOOR LOCK
170F	LUGGAGE DOOR LOCK
170G	LUGGAGE DOOR LOCK
170H	LUGGAGE DOOR LOCK
170J	LUGGAGE DOOR LOCK
170L	LUGGAGE DOOR LOCK
170M	LUGGAGE DOOR LOCK
170N	LUGGAGE DOOR LOCK
170P	LUGGAGE DOOR LOCK
170R	LUGGAGE DOOR LOCK
170S	LUGGAGE DOOR LOCK
170V	LUGGAGE DOOR LOCK
170W	LUGGAGE DOOR LOCK
170X	LUGGAGE DOOR LOCK
170Y	LUGGAGE DOOR LOCK
170Z	LUGGAGE DOOR LOCK
182	PYROMETER
182A	PYROMETER
197A	FUEL WATER FILTER
197B	FUEL WATER FILTER
201	WORLD TRANSM-SPARE
202	WORLD TRANSM-SPARE
203	WORLD TRANSM-SPARE
204	WORLD TRANSM-SPARE
205	WORLD TRANSM-SPARE
206	WORLD TRANSM-SPARE
214	WORLD TRANSM-BACK UP SIGNAL
214A	BACK UP SIGNAL
231	NEUTRAL SIGNAL GRD
240	DDEC III-ECM 12V FEEDING
241	DDEC III-ECM 12V FEEDING
251	PRODRIVER-12V HOT WIRE
290	FAN CLUTCH RADIATOR
291	FAN CLUTCH RADIATOR SPD 1
292	FAN CLUTCH RADIATOR SPD 2
417	DDEC III-LIMIT SPEED GOVERNOR
419	DDEC III-CHECK ENGINE LIGHT
439	DDEC III-12V IGNITION
440	DDEC III-12V IGNITION
440A	DDEC III-12V IGNITION
451	DDEC III-A/C FAN CLUTCH
505	DDEC III-TACHOMETER DRIVE
509	DDEC III-STOP ENGINE LIGHT
510	DDEC III-FAST IDLE SIGNAL
524	DDEC III-ENGINE BRAKE DISABLE
525	DDEC III-FAST IDLE SIGNAL
528	DDEC III-STOP ENG. OVERRIDE
531	DDEC III-CRUISE CLUTCH RELEASE
541	DDEC III-CRUISE SET SW
543	DDEC III-CRUISE STOP SW CUT IN
544	DDEC III-CRUISE ON/OFF SW
545	DDEC III-CRUISE RESUME SW
555	DDEC III-FAN CLUTCH SPEED* 1
556	DDEC III-VEHICLE SPEED (+)
557	DDEC III-VEHICLE SPEED (-)

CIRCUIT NUMBER CODE PAGE E : 3

NO.	SYSTEM
563	DDEC III-FAN CLUTCH SPEED* 2
583	DDEC III-ENGINE BRAKE 4 CYL.
750	PRODRIVER-ILLUMINATION LIGHT
900	DDEC III-DATA LINK (+)
901	DDEC III-DATA LINK (-)
908	DDEC III-HYDRAULIC TRANSM. MOD.
916	DDEC III-SENSOR SUPPLY (5VDC)
952	DDEC III-SENSOR RETURN
953	DDEC III-BATTERY GRD
953C	DDEC III-BATTERY GRD
979	DDEC III-ENGINE BRAKE 2 CYL.
A	A/C & HEAT SYSTEM-HI PRES.
A1	A/C & HEAT SYSTEM-LO PRES.
A4	A/C & HEAT SYSTEM-CONTROL SW
A5	A/C & HEAT SYSTEM-CONTROL SW
A6	A/C & HEAT SYSTEM-CONTROL SW
D1	SOUND SYSTEM-RH SPEAKER
D2	SOUND SYSTEM-RH SPEAKER
D3	SOUND SYSTEM-RH SPEAKER
D4	SOUND SYSTEM-RH SPEAKER
D5	SOUND SYSTEM-RH SPEAKER
D6	SOUND SYSTEM-RH SPEAKER
D7	SOUND SYSTEM-RH SPEAKER
D8	SOUND SYSTEM-RH SPEAKER
G1	SOUND SYSTEM-LH SPEAKER
G2	SOUND SYSTEM-LH SPEAKER
G3	SOUND SYSTEM-LH SPEAKER
G4	SOUND SYSTEM-LH SPEAKER
G5	SOUND SYSTEM-LH SPEAKER
G6	SOUND SYSTEM-LH SPEAKER
G7	SOUND SYSTEM-LH SPEAKER
G8	SOUND SYSTEM-LH SPEAKER
J4	A/C & HEAT SYSTEM-DRIVER'S HTR
L1	VIDEO SYSTEM- 110V
L1	INTERIOR LTS-110V FLUORESCENT
L1A	INTERIOR LTS-110V FLUORESCENT
L1C	INTERIOR LTS-110V FLUORESCENT
L2A	INTERIOR LTS-110V FLUORESCENT
L2C	INTERIOR LTS-110V FLUORESCENT
L8	ENG.BLK & WATER TANK-HAETER
L9	ENG.BLK & WATER TANK-HAETER
N1	VIDEO SYSTEM- 110V
N2	INTERIOR LTS-110V FLUORESCENT
O3	A/C & HEAT SYSTEM-DRIVER'S HTR
R1	A/C & HEAT SYSTEM-DRIVER'S HTR
R6	A/C & HEAT SYSTEM-DRIVER'S HTR
SH1	SHIELD WIRE GRD
SH2	SHIELD WIRE GRD
SH3	SHIELD WIRE GRD
SP1	SPARE
SP2	SPARE
SP3	SPARE
SP4	SPARE
SP5	SPARE
SP10	SPARE
SP11	SPARE

NO.	SYSTEM
SP12	SPARE
SP13	SPARE
SP14	SPARE
SP15	SPARE
SP16	SPARE
SP20	SPARE
SP21	SPARE
SP22	SPARE
SP23	SPARE
SP30	SPARE
SP31	SPARE
SP32	SPARE
SP33	SPARE
SP34	SPARE
SP35	SPARE
SP57	SPARE
SP60	SPARE
SP61	SPARE
SP62	SPARE
SP63	SPARE
SP69	SPARE
SP70	SPARE
V5	A/C & HEAT SYSTEM-DRIVER'S HTR
V7	A/C & HEAT SYSTEM-DRIVER'S HTR

NO.	SYSTEM
0	GRD BATTERY A TO GRD STUD
0	GRD BATTERY A1 TO GRD STUD
0	GRD STARTER MOTOR TO GRD STUD
0	FJP - GRD
0	RJB - GRD
0	BJP - GRD
0A	RJB - GRD
0A	FR SERV JCT BOX - GRD
0B	FJP - GRD
OB	RJB - GRD
OB	BOOSTER BLK TO GRD STUD
0BE	0V BATTERY MONITOR
0C	RJB - GRD
0S	AMPLI - GRD
0CR	24V DISC. SW RLY GRD SIGNAL
0DS	24V DISC. SW RLY GRD SIGNAL
0D	RJB - GRD
0E	RJB - GRD
0F	RJB - GRD
0H	FJP - GRD
0M	BACK-UP MONITOR
0MR	24V DISC. SW RLY GRD SIGNAL
0MS	24V DISC. SW RLY GRD SIGNAL
0P	RJB - GRD
0R	SOUND SYSTEM GRD
0SA	FJB - BATTERY GRD-SOUND SYS.
0SE	FJB - BATTERY GRD-SOUND SYS.
0SF	FJB - BATTERY GRD-SOUND SYS.
0S2	RADIO - BATTERY GRD
0S3	VIDEO - BATTERY GRD
0SS	SOUND SYSTEM - BATTERY GRD
00SS	SOUND SYSTEM - BATTERY GRD
0T	FJP - GRD
0T	FR SERVICE CPT-GRD
0V	FJP - GRD
0VA	GRD STUD TO BAT.EQUALIZER
0W	FJP - GRD
0W	WORLD TRANSM. VIM CHASSIS GRD
0WA	PRE_HEAT WATER HEATER WEBASTO
0WB	PRE_HEAT WATER HEATER WEBASTO
0X	RJB - GRD
0Y	ABS SYSTEM-GRD
0Y1	ABS SYSTEM-GRD
2	A/C & HEAT SYSTEM-CONDENSER
2A	A/C & HEAT SYSTEM-CONDENSER
2C	A/C & HEAT SYSTEM-CONDENSER
2D	A/C & HEAT SYSTEM-CONDENSER
2E	A/C & HEAT SYSTEM-CONDENSER
3	A/C & HEAT SYSTEM-EVAPORATOR
3A	A/C & HEAT SYSTEM-EVAPORATOR
3B	A/C & HEAT SYSTEM-EVAPORATOR
4	CHIME-PASSENGER & HOSTESS
4A	CHIME-PASSENGER & HOSTESS
4B	CHIME-PASSENGER & HOSTESS
4C	CHIME-PASSENGER & HOSTESS
4D	CHIME-PASSENGER & HOSTESS
4E	CHIME-PASSENGER & HOSTESS
5	INTERIOR LTS-EMERGENCY EXIT LTS
5A	INTERIOR LTS-EMERGENCY EXIT LTS
5C	INTERIOR LTS-EMERGENCY EXIT LTS
6	INTERIOR LTS-AISLE LTS
7	INTERIOR LTS-STEPWELL LTS
8A	INTERIOR LTS-AISLE & EMERG. LTS
8B	INTERIOR LTS-AISLE & EMERG. LTS
9	INTERIOR LTS-ENGINE CPT
9	INTERIOR LTS-RR JCT BOX
9	INTERIOR LTS-FR SERVICE CPT
9	INTERIOR LTS-FR SERVICE CPT
9A	INTERIOR LTS-FR JCT PANEL
9E	CHIME-PASSENGER & HOSTESS
10	A/C & HEAT SYSTEM-LO PRES.
10	INTERIOR LTS-LUGGAGE CPT
10A	INTERIOR LTS-LUGGAGE CPT
10A	A/C AUXILIARY-CLUTCH
10B	INTERIOR LTS-LUGGAGE CPT
10C	INTERIOR LTS-LUGGAGE CPT
10D	INTERIOR LTS-LUGGAGE CPT
11	FR. DESTINATION SIGN
11A	FR. DESTINATION SIGN
11B	FR. DESTINATION SIGN
11C	FR. DESTINATION SIGN
11D	FR. DESTINATION SIGN
11E	FR. DESTINATION SIGN
11K	FR. DESTINATION SIGN
11P	FR. DESTINATION SIGN
12	12V BATTERY TO JCT BLOCK
12	12V VIDEO SYSTEM
12A	FR JCT PANEL 12V DISC SW
12A	RR JCT BOX 12V DISC SW
12B	FR JCT PANEL 12V DISC SW
12BE	12V BATTERY MONITOR
12C	RR JCT BOX 12V DISC SW
12D	FR & RR JCT PANEL 12V HOT WIRE
12E	FR JCT PANEL 12V DISC SW
12F	RR JCT BOX 12V DISC SW
12G	FR JCT PANEL 12V DISC SW
12I	FR JCT PANEL 12V IGNITION
12IF	FR JCT PANEL 12V IGNITION
12IM	BACK-UP MONITOR
12P	FR & RR JCT PANEL 12V DISC SW
12P	12V VIDEO SYSTEM
12S	12V BATTERY-SOUND SYSTEM RADIO
12SA	12V BATTERY-SOUND SYSTEM
12SB	12V BATTERY-SOUND SYSTEM
12SC	12V BATTERY-SOUND SYSTEM
12SE	12V BATTERY-SOUND SYSTEM
12SF	12V BATTERY-SOUND SYSTEM
12SS	12V BATTERY-SOUND SYSTEM
12S1	12V BATTERY-SOUND SYSTEM RADIO
12S2	12V BATTERY-SOUND SYSTEM RADIO
12T	RR JCT BOX 12V DISC SW
12VD	FR & RR JCT BOX 12V HOT WIRE
12VO	12V BATTERY POST TO EQUALIZER
12VF	12V FR JCT PANEL
12VI	RR JCT BOX 12V IGNITION
12VR	RR JCT BOX 12V DISC SW
12W	12V HOT WIRE DDEC III FEED
13A	ALARM & SIGNAL-LO AIR PRIM.
13B	ALARM & SIGNAL-LO AIR SEC.
14	LAVATORY-FLUSHING SW
15	EXTERIOR LTS-MULTI FUNC LEVEL
15	ALARM & SIGNAL-DIF. OIL TEMP

CIRCUIT NUMBER CODE PAGE E : 1

NO.	SYSTEM
15	WIPER & WASHER SYSTEM
15A	ALARM & SIGNAL-DIF. OIL TEMP
16	SPEEDOMETER SIGNAL (+)
16T	SPEED SW SIGNAL IN (+)
17	EXTERIOR LTS-FLASHER UNIT
17A	EXTERIOR LTS-FLASHER UNIT
18	ETHER COLD START SYST.
20	SPEEDOMETER SIGNAL (-)
20T	SPEED SW SIGNAL IN (-)
21	EXTERIOR LTS-DIRECTIONNAL LH
21A	EXTERIOR LTS-DIRECTIONNAL LH
21B	EXTERIOR LTS-DIRECTIONNAL LH
21H	EXTERIOR LTS-HAZARD SIGNAL
23	EXTERIOR LTS-DIRECTIONNAL RH
23A	EXTERIOR LTS-DIRECTIONNAL RH
23B	EXTERIOR LTS-DIRECTIONNAL RH
23E	KNEELING-RH EXT. FLASHING LTS
23F	KNEELING-RH EXT. FLASHING LTS
23H	EXTERIOR LTS-HAZARD SIGNAL
24	BATTERY TO 24V CUT OUT RLY
24A	BOOSTER TO 24V DISC SW
24A	RR JCT BOX 24V DISC SW
24A	FR JCT PANEL 24V DISC SW
24B	FR JCT PANEL 24V DISC SW
24BE	BATTERY MONITOR
24C	FR JCT PANEL 24V DISC SW
24D	FR & RR JCT PANEL 24V HOT WIRE
24DA	A/C & HEAT. SYS.-WATER PUMP
24E	24V CUT OUT RLY TO 24V DIST.
24F	FR JCT PANEL 24V DISC SW
24I	FR JCT PANEL 24V IGNITION
24I	RR JCT BOX 24V IGNITION
24IA	FR JCT PANEL 24V IGNITION
24IB	FR JCT PANEL 24V IGNITION
24K	FR JCT PANEL 24V DISC SW
24P	FR JCT PANEL 24V DISC SW
24R	BATT. CPT TO START RLY
24S	RR JCT BOX 24V DISC SW
24S1	24V BATTERY-SOUND SYSTEM
24S2	24V BATTERY-SOUND SYSTEM
24S3	24V BATTERY-SOUND SYSTEM VIDEO
24S4	24V BATTERY-SOUND SYSTEM VIDEO
24SB	24V BATTERY-SOUND SYSTEM
24SS	24V BATTERY-SOUND SYSTEM
24T	RR JCT BOX 24V DISC SW
24VA	24V BATTERY POST TO EQUALIZER
24VI	RR JCT BOX 24V IGNITION
24VIF	FR JCT PANEL 24V IGNITION
24VD	FR & RR JCTY BOX 24V HOT WIRE
24VF	FR JCT PANEL 24V DISC SW
24VR	RR JCT PANEL 24V DISC SW
24X	24V SPEED SW & KNEELING
25	24VAC GEN RLY ON SIGNAL
25A1	PRE-EXITATION ALT.BOSCH *1
25B	EXTERIOR LTS-DAYTIME RUN LTS
25A2	PRE-EXITATION ALT.BOSCH *2
25A3	HVAC SIGNAL-ALTERNATOR BOSCH
25A4	SIGNAL ALT.*1 OR *2
27	LAVATORY-EMERGENCY BUZZER
28	A/C & HEAT SYSTEM-WARNING LT
29	A/C & HEAT SYSTEM-DRIVER'S HTR
29A	A/C & HEAT SYSTEM-DRIVER'S HTR
29B	A/C & HEAT SYSTEM-DRIVER'S HTR
31A	A/C & HEAT SYSTEM-PRESSURE SW
31B	A/C & HEAT SYSTEM-PRESSURE SW
31B	WIPER & WASHER SYSTEM
30	GALLEY SYSTEM
30A	GALLEY SYSTEM
32B	EXTERIOR LTS-BACK-UP
32	EXTERIOR LTS-BACK-UP
32D	BACK-UP MONITOR
32D	BACK-UP ALARM
32M	BACK-UP MONITOR
34	A/C & HEAT SYSTEM-CONDENSER
34A	A/C & HEAT SYSTEM-CONDENSER
34B	A/C & HEAT SYSTEM-CONDENSER
34C	A/C & HEAT SYSTEM-CONDENSER
34D	A/C & HEAT SYSTEM-CONDENSER
34E	A/C & HEAT SYSTEM-CONDENSER
34F	A/C & HEAT SYSTEM-CONDENSER
34G	A/C & HEAT SYSTEM-CONDENSER
34H	A/C & HEAT SYSTEM-CONDENSER
34J	A/C & HEAT SYSTEM-CONDENSER
35	INTERIOR LTS-STEPWELL LTS
36	ENGINE BRAKE SYSTEM & RETARDER
36A	ENGINE BRAKE SYSTEM
36C	ENGINE BRAKE SYSTEM-ABS CANCEL
37	LAVATORY-OCCUPIED LTS
38	FUEL WATER FILTER
38	INTERIOR LTS-24V FLUORESCENT
38A	INTERIOR LTS-24V FLUORESCENT
38B	INTERIOR LTS-24V FLUORESCENT
38C	INTERIOR LTS-24V FLUORESCENT
38E	INTERIOR LTS-24V FLUORESCENT
38F	INTERIOR LTS-24V FLUORESCENT
39	INTERIOR LTS-DRIVER'S LTS
39A	INTERIOR LTS-DRIVER'S LTS
39B	INTERIOR LTS-DRIVER'S LTS
44	EXTERIOR LTS-FOG
44A	EXTERIOR LTS-FOG
44B	EXTERIOR LTS-FOG
44C	EXTERIOR LTS-FOG & HAZARD SW
45	A/C & HEAT SYSTEM-DRIVER'S CTRL
45	A/C & HEAT SYSTEM-WATER VALVE
45A	A/C & HEAT SYSTEM-WATER VALVE
45B	A/C & HEAT SYSTEM-WATER VALVE
45E	A/C & HEAT SYSTEM-BYPASS VALVE
46	EXTERIOR LTS-MARKER
46A	EXTERIOR LTS-MARKER
46B	EXTERIOR LTS-MARKER
46C	EXTERIOR LTS-MARKER
47	A/C & HEAT SYSTEM-DRIVER'S HTR
47	A/C & HEAT SYSTEM-FULL AIR
48	INTERIOR LTS-STEPWELL LTS
51	INTERIOR LTS-READING LTS
52	ALARM & SIGNAL-ELEC. HORN
52A	ALARM & SIGNAL-ELEC. HORN
53	ALARM & SIGNAL-ELEC. HORN
50B	WIPER & WASHER SYSTEM
53C	WIPER & WASHER SYSTEM
53E	WIPER & WASHER SYSTEM
53F	WIPER & WASHER SYSTEM

NO.	SYSTEM
53J	WIPER & WASHER SYSTEM
54	SPARE-F.J.B. TO FR ROOF
55	EXTERIOR LTS-HI BEAM
56	TRANSM. OIL TEMP GAUGE
57	EXTERIOR LTS-HI BEAM
57	A/C & HEAT SYSTEM-WATER PUMP
57A	EXTERIOR LTS-HI BEAM
57A	A/C & HEAT SYSTEM-WATER PUMP
57B	A/C & HEAT SYSTEM-WATER PUMP
57C	PRE-HEAT WATER HEATER
57D	PRE-HEAT WATER HEATER
57E	PRE-HEAT WTR HTR PUMP
57F	PRE-HEAT WATER HEATER
57W	PRE-HEAT WATER HEATER
58	EXTERIOR LTS-LO BEAM
58A	EXTERIOR LTS-LO BEAM
58B	EXTERIOR LTS-LO BEAM
58E	EXTERIOR LTS-LO BEAM
59A	ENGINE BRAKE SYSTEM
60	EXTERIOR LTS-RR & FR ROOF GRD
61	EXTERIOR LTS-24V FEED SW
61A	EXTERIOR LTS-HEAD SIGNAL
62	LAVATORY-OCCUPIED LTS
62B	LAVATORY-OCCUPIED LTS
63	EXTERIOR LTS-CLEARANCE
63A	EXTERIOR LTS-CLEARANCE
63B	EXTERIOR LTS-CLEARANCE
63C	EXTERIOR LTS-MARKER SIGNAL
63D	EXTERIOR LTS-MARKER & TAIL
63E	EXTERIOR LTS-CLEARANCE
63F	EXTERIOR LTS-MARKER BLINKER
63H	EXTERIOR LTS-TAIL
63K	EXTERIOR LTS-TAIL
64	DIFFERENTIAL OIL TEMP GAUGE
65A	PRE-HEAT WATER HEATER
66B	RR JCT BOX 12V HOT WIRE
67	A/C & HEAT SYSTEM
67A	A/C & HEAT SYSTEM
67B	A/C & HEAT SYSTEM
67C	A/C & HEAT SYSTEM
69	RR JCT BOX 24V HOT WIRE
70	INTERIOR LTS-HAT RACK LTS
70A	INTERIOR LTS-HAT RACK LTS
70C	INTERIOR LTS-HAT RACK LTS
71	A/C AUXILIARY-DASH SW
71B	R J B GRD-BACK UP ALARM
71H	A/C AUXILIARY-DASH SW
72A	A/C AUXILIARY-DASH SW
72H	A/C AUXILIARY-DASH SW
73	LAVATORY-NIGHT LTS
74	INTERIOR LTS-READING LTS
74A	INTERIOR LTS-READING LTS
74B	INTERIOR LTS-READING LTS
75	INTERIOR LTS-READING LTS
76	FUEL TANK GAUGE
76C	LOW FUEL LT
76L	LOW FUEL LT
76M	FUEL PRIME PUMP
76P	FUEL PRIME PUMP
77H	A/C & HEAT SYSTEM-CLUTCH
77B	A/C AUXILIARY-LIQ. SOL.
77C	A/C AUXILIARY-LIQ. SOL.
77H	A/C & HEAT SYSTEM-FAN CLUTCH
80	WORLD TRANSM-NEUTRAL SIGNAL GRD
81	EXTERIOR LTS-STOP SW
82	EXTERIOR LTS-STOP SIGNAL
82A	EXTERIOR LTS-STOP SIGNAL
82B	EXTERIOR LTS-STOP LTS
82K	EXTERIOR LTS-STOP RETARDER
82L	EXTERIOR LTS-STOP LTS
82R	EXTERIOR LTS-STOP LTS
83	ENGINE CTR-MAST KEY SW ACCES
84	ENGINE CTR-MAST KEY SW START
84A	ENGINE CTR-MAST KEY SW START
85	ENGINE CTR-MAST KEY SW IGN
85A	24V IGN DASH INSTRUMENTATION
85B	24V IGN DASH INSTRUMENTATION
85C	ENGINE CTR-24V IGNITION
85C	PARKING BRAKE SWITCH
86A	ENGINE CTR-STARTER SOL SIGN
85Y	ABS-WARNING LT
87B	ENGINE CTR-24V IGNITION
85X	ABS-24V IGN
86	ENGINE CTR-STARTER SOL SIGN
85F	LO AIR SONALERT
85W	ABS-24V IGN
88	ENGINE CTR-RR START SIGNAL
89	ENGINE CTR-RR START SIGNAL
90	A/C & HEAT SYSTEM-WATER PUMP
90	GALLEY SYSTEM
90	DIGITAL CLOCK
90A	GALLEY SYSTEM
90B	FR JCT PANEL 24V DISC SW
90B	ENGINE CTR-MAST KEY SW FEED
90B	GALLEY SYSTEM
90C	ALARM & SIGNAL-FIRE DETECTOR
90E	GALLEY SYSTEM
90F	GALLEY SYSTEM
91	PARKING BRAKE SW SIGNAL
91A	PARKING BRAKE SW SIGNAL
91B	EXTERIOR LTS-RUN LTS CANCEL
91B	DDEC III-FAST IDLE SIGNAL
91C	PRE-HEAT WATER HEATER
92	BATTERY MONITOR-CHECK BALANCE
92A	BATTERY MONITOR-CHECK BALANCE
93	BATTERY MONITOR-CHECK LO/HI
93A	BATTERY MONITOR-CHECK LO/HI
94	HIGH BUOY SYSTEM
94A	HIGH BUOY SYSTEM
95	ENGINE BRAKE & RETARDER SYSTEM
95A	ENGINE BRAKE & RETARDER SYSTEM
95B	ENGINE BRAKE & RETARDER SYSTEM
97	TACHOMETER (-)
99	A/C AUXILIARY-DASH SW
100	INTERIOR LTS-GENERAL LTS
100A	INTERIOR LTS-GENERAL LTS
100B	INTERIOR LTS-GENERAL LTS
100C	INTERIOR LTS-GENERAL LTS
101	WORLD TRANSM-LO SIGNAL SOL. LO
102	A/C JCT BOX-24V DISC. SW
102	24V STARTER TO GENERATOR
102	WORLD TRANSM-SOL. GRD 1
102	WORLD TRANSM-SOL. C3
104	WORLD TRANSM-SOL. FORWARD
105	WORLD TRANSM-RETARDER & SUMP
105W	WORLD TRANSM-RETARDER & SUMP
106	WORLD TRANSM-OIL LEVEL HI
107	WORLD TRANSM-LOCKUP SOL. HI
108	WORLD TRANSM-REMOTE PWR WAKE UP
108	24V DISC SW TO 24V SYSTEM
109	WORLD TRANSM-RET. SOL. LO
110	ALARM & SIGNAL-WATER TEMP
110	WORLD TRANSM-LOCKUP SOL. LO
111	BATTERY GRD
111	WORLD TRANSM-SOL. C6
112	WORLD TRANSM-SPARE OUTPUT (+)
113	ALARM & SIGNAL-OIL PRESS
113	WORLD TRANSM-REVERSE WARNING
114	WORLD TRANSM-SPARE OUTPUT (-)
114	INTERIOR LTS-DASH LT REGUL.
114A	INTERIOR LTS-DASH LT
114B	INTERIOR LTS-DASH LT REGUL.
114C	INTERIOR LTS-DASH LT
115	ALARM & SIGNAL-TAG PRESS
115	DDEC III-COOLANT LEVEL
115	WORLD TRANSM-DO NOT SHIFT SIGNAL
115A	ALARM & SIGNAL-TAG PRESS
115B	ALARM & SIGNAL-TAG PRESS
115C	DDEC III-COOLANT LEVEL
115W	WORLD TRANSM-DO NOT SHIFT SIGNAL
116	WORLD TRANSM-LO SIGNAL SOL. HI
116	A/C & HEAT SYSTEM-DRIVER'S HTR
116A	A/C & HEAT SYSTEM-DRIVER'S HTR
116B	A/C & HEAT SYSTEM-DRIVER'S HTR
117	WORLD TRANSM-SPARE INPUT (-)
117	ALARM & SIGNAL-TRANSM OIL TEMP
117A	ALARM & SIGNAL-TRANSM OIL TEMP
118	WORLD TRANSM-SPARE INPUT (+)
119	CHIME-HOSTESS & PASSENGER
119	WORLD TRANSM-ENG BRK INPUT (+)
119A	CHIME-HOSTESS & PASSENGER
119B	CHIME-HOSTESS & PASSENGER
120	12V HOT WIRE
120	WORLD TRANSM-SOL. C1
120D	12V HOT WIRE
120Y	VIDEO SYSTEM
120Z	VIDEO SYSTEM
121	WORLD TRANSM-SOL. GRD 2
121	CIGAR LIGHTER
122	A/C & HEAT SYSTEM-DRIVER'S HTR
122	A/C & HEAT SYSTEM-FRESH AIR
122	WORLD TRANSM-SOL. GRD 4
123	WORLD TRANSM-NEUTRAL START
123	ALARM & SIGNAL-FIRE DETECTOR
123A	ALARM & SIGNAL-FIRE DETECTOR
124	WORLD TRANSM-THROTTLE (HI)
125	LAVATORY-FAN
125	WORLD TRANSM-RETARDER INDICATOR
125W	WORLD TRANSM-RETARDER INDICATOR
126	WORLD TRANSM-LUBE PRESS SW.
126	KNEELING SYSTEM
126A	KNEELING SYSTEM
126B	KNEELING SYSTEM
126C	KNEELING SYSTEM
126G	KNEELING SYSTEM
126H	KNEELING SYSTEM
127	WORLD TRANSM-RETARDER FEED SOL.
127	PRE-HEAT WATER HEATER
127A	PRE-HEAT WATER HEATER
127B	PRE-HEAT WATER HEATER
127W	PRE-HEAT WATER HEATER
127X	PRE-HEAT WATER HEATER
128	WORLD TRANSM-SOL. C2
128A	PRE-HEAT WATER HEATER
128B	PRE-HEAT WATER HEATER
128C	PRE-HEAT WATER HEATER
128D	PRE-HEAT WATER HEATER
128E	PRE-HEAT WATER HEATER
128F	PRE-HEAT WATER HEATER
128W	PRE-HEAT WATER HEATER
128X	PRE-HEAT WATER HEATER
129	WORLD TRANSM-SOL. C5
129	PRE-HEAT WATER HEATER
129A	PRE-HEAT WATER HEATER
129B	PRE-HEAT WATER HEATER
130	WORLD TRANSM-SOL. GRD 3
130A	A/C & HEAT SYSTEM-EVAPORATOR
130	A/C & HEAT SYSTEM-EVAPORATOR
131	24V DISC SW TO FR JCT PANEL
131	WORLD TRANSM-SOL. C4
132	WORLD TRANSM-ENG BRK OUTPUT (-)
132W	WORLD TRANSM-ENG BRK OUTPUT (-)
133	WORLD TRANSM-RET. ACTUATOR HI
133	GALLEY SYSTEM-CONTAINER RH
133A	GALLEY SYSTEM-CONTAINER RH
134	WORLD TRANSM-RET. APPLY SOL. HI
134	GALLEY SYSTEM-CONTAINER RH
134A	GALLEY SYSTEM-CONTAINER RH
135	WORLD TRANSM-ANALOG GRD
135	A/C AUXILIARY-FAN
135A	A/C AUXILIARY-FAN
135B	A/C AUXILIARY-COIL SENSING
135C	WORLD TRANSM-RETARDER TEMP
135D	WORLD TRANSM-RETARDER RES MOD
136	GALLEY SYSTEM-LAMP
136	WORLD TRANSM-ECU POWER
136V	WORLD TRANSM-12V BATTERY
136W	WORLD TRANSM-12V BATTERY
136X	WORLD TRANSM-12V BATTERY
137	WORLD TRANSM-RETARDER
137	RR VIEW MIRROR
137A	RR VIEW MIRROR
138	WORLD TRANSM-RETARDER TEMP
138	ABS SYSTEM
138	A/C AUXILIARY-FAN
138A	ABS SYSTEM
138A	A/C AUXILIARY-FAN
139	ABS SYSTEM
139	A/C AUXILIARY-FAN
139	WORLD TRANSM-OUTPUT SPEED HI
139A	A/C AUXILIARY-FAN

NO.	SYSTEM
140	A/C AUXILIARY-SHUTTER
140	WORLD TRANSM-OUTPUT SPEED LO
140	ABS SYSTEM
141	ABS SYSTEM
141	WORLD TRANSM-ENGINE SPEED HI
142	WORLD TRANSM-SERIAL COM. A
142	ABS SYSTEM
143	ABS SYSTEM
143A	ABS SYSTEM
143	WORLD TRANSM-ECU BATTERY GRD
143W	WORLD TRANSM-BATTERY GRD
143X	WORLD TRANSM-BATTERY GRD
144	WORLD TRANSM-ECU CHASSIS GRD
144	ABS SYSTEM
144A	ABS SYSTEM
145	ABS SYSTEM
146	ABS SYSTEM
146	WORLD TRANSM-IGNITION SENSE
146W	WORLD TRANSM-12V IGNITION
146X	WORLD TRANSM-12V IGNITION
147	WORLD TRANSM-OIL TEMP
147	ABS SYSTEM
147	ETHER COLD START
147A	ETHER COLD START
148	ABS SYSTEM
148	WORLD TRANSM-OUTPUT SPEED LO
149	WORLD TRANSM-TURBINE SPEED HI
149	ABS SYSTEM
149A	ABS SYSTEM
150	ABS SYSTEM-SPARE
150	WORLD TRANSM-ENGINE SPEED LO
150	DDEC III-ECM BATTERY GRD
150A	DDEC III-ECM BATTERY GRD
151	DDEC III-ECM BATTERY GRD
151	WORLD TRANSM-SERIAL COM. B
151	ABS SYSTEM-SPARE
152	ABS SYSTEM-SPARE
153	ABS SYSTEM
153	WORLD TRANSM-SPARE INPUT (-)
154	WORLD TRANSM-ABS RETARDER INPUT
155	WORLD TRANSM-SPARE INPUT (-)
155	ABS SYSTEM
156	WORLD TRANSM-THROTTLE POS.
156	ABS SYSTEM
156A	ABS SYSTEM
156C	ABS SYSTEM
156W	ABS SYSTEM
157	WORLD TRANSM-SPEEDOMETER SIGNAL
157	ABS SYSTEM
157A	ABS SYSTEM
157B	ABS SYSTEM
157C	ABS SYST.-CANCEL SEC. BRK
158	WORLD TRANSM-DIMMER
160	WORLD TRANSM-SER. INTERFACE (-)
161	WORLD TRANSM-SIGNAL GRD
161B	WORLD TRANSM-SIGNAL GRD
162	WORLD TRANSM-PRESS. SW C3
163	WORLD TRANSM-RETARDER ENABLE
164	WORLD TRANSM-RET. ACTUATOR SIGN

NO.	SYSTEM
165	WORLD TRANSM-OIL LEVEL SIGNAL
168	WORLD TRANSM-SER. INTERFACE (+)
170C	LUGGAGE DOOR LOCK
170D	LUGGAGE DOOR LOCK
170E	LUGGAGE DOOR LOCK
170F	LUGGAGE DOOR LOCK
170G	LUGGAGE DOOR LOCK
170H	LUGGAGE DOOR LOCK
170J	LUGGAGE DOOR LOCK
170L	LUGGAGE DOOR LOCK
170M	LUGGAGE DOOR LOCK
170N	LUGGAGE DOOR LOCK
170P	LUGGAGE DOOR LOCK
170R	LUGGAGE DOOR LOCK
170S	LUGGAGE DOOR LOCK
170V	LUGGAGE DOOR LOCK
170W	LUGGAGE DOOR LOCK
170X	LUGGAGE DOOR LOCK
170Y	LUGGAGE DOOR LOCK
170Z	LUGGAGE DOOR LOCK
182	PYROMETER
182A	PYROMETER
197A	FUEL WATER FILTER
197B	FUEL WATER FILTER
201	WORLD TRANSM-SPARE
202	WORLD TRANSM-SPARE
203	WORLD TRANSM-SPARE
204	WORLD TRANSM-SPARE
205	WORLD TRANSM-SPARE
206	WORLD TRANSM-SPARE
214	WORLD TRANSM-BACK UP SIGNAL
214A	BACK UP SIGNAL
231	NEUTRAL SIGNAL GRD
240	DDEC III-ECM 12V FEEDING
241	DDEC III-ECM 12V FEEDING
251	PRODRIVER-12V HOT WIRE
290	FAN CLUTCH RADIATOR
291	FAN CLUTCH RADIATOR SPD 1
292	FAN CLUTCH RADIATOR SPD 2
417	DDEC III-LIMIT SPEED GOVERNOR
419	DDEC III-CHECK ENGINE LIGHT
439	DDEC III-12V IGNITION
440	DDEC III-12V IGNITION
440A	DDEC III-12V IGNITION
451	DDEC III-A/C FAN CLUTCH
505	DDEC III-TACHOMETER DRIVE
509	DDEC III-STOP ENGINE LIGHT
510	DDEC III-FAST IDLE SIGNAL
524	DDEC III-ENGINE BRAKE DISABLE
525	DDEC III-FAST IDLE SIGNAL
528	DDEC III-STOP ENG. OVERRIDE
531	DDEC III-CRUISE CLUTCH RELEASE
541	DDEC III-CRUISE SET SW
543	DDEC III-CRUISE STOP SW CUT IN
544	DDEC III-CRUISE ON/OFF SW
545	DDEC III-CRUISE RESUME SW
555	DDEC III-FAN CLUTCH SPEED* 1
556	DDEC III-VEHICLE SPEED (+)
557	DDEC III-VEHICLE SPEED (-)

CIRCUIT NUMBER CODE PAGE E : 3

NO.	SYSTEM
563	DDEC III-FAN CLUTCH SPEED* 2
583	DDEC III-ENGINE BRAKE 4 CYL.
750	PRODRIVER-ILLUMINATION LIGHT
900	DDEC III-DATA LINK (+)
901	DDEC III-DATA LINK (-)
908	DDEC III-HYDRAULIC TRANSM. MOD.
916	DDEC III-SENSOR SUPPLY (5VDC)
952	DDEC III-SENSOR RETURN
953	DDEC III-BATTERY GRD
953C	DDEC III-BATTERY GRD
979	DDEC III-ENGINE BRAKE 2 CYL.
A	A/C & HEAT SYSTEM-HI PRES.
A1	A/C & HEAT SYSTEM-LO PRES.
A4	A/C & HEAT SYSTEM-CONTROL SW
A5	A/C & HEAT SYSTEM-CONTROL SW
A6	A/C & HEAT SYSTEM-CONTROL SW
D1	SOUND SYSTEM-RH SPEAKER
D2	SOUND SYSTEM-RH SPEAKER
D3	SOUND SYSTEM-RH SPEAKER
D4	SOUND SYSTEM-RH SPEAKER
D5	SOUND SYSTEM-RH SPEAKER
D6	SOUND SYSTEM-RH SPEAKER
D7	SOUND SYSTEM-RH SPEAKER
D8	SOUND SYSTEM-RH SPEAKER
G1	SOUND SYSTEM-LH SPEAKER
G2	SOUND SYSTEM-LH SPEAKER
G3	SOUND SYSTEM-LH SPEAKER
G4	SOUND SYSTEM-LH SPEAKER
G5	SOUND SYSTEM-LH SPEAKER
G6	SOUND SYSTEM-LH SPEAKER
G7	SOUND SYSTEM-LH SPEAKER
G8	SOUND SYSTEM-LH SPEAKER
J4	A/C & HEAT SYSTEM-DRIVER'S HTR
L1	VIDEO SYSTEM- 110V
L1	INTERIOR LTS-110V FLUORESCENT
L1A	INTERIOR LTS-110V FLUORESCENT
L1C	INTERIOR LTS-110V FLUORESCENT
L2A	INTERIOR LTS-110V FLUORESCENT
L2C	INTERIOR LTS-110V FLUORESCENT
L8	ENG.BLK & WATER TANK-HAETER
L9	ENG.BLK & WATER TANK-HAETER
N1	VIDEO SYSTEM- 110V
N2	INTERIOR LTS-110V FLUORESCENT
O3	A/C & HEAT SYSTEM-DRIVER'S HTR
R1	A/C & HEAT SYSTEM-DRIVER'S HTR
R6	A/C & HEAT SYSTEM-DRIVER'S HTR
SH1	SHIELD WIRE GRD
SH2	SHIELD WIRE GRD
SH3	SHIELD WIRE GRD
SP1	SPARE
SP2	SPARE
SP3	SPARE
SP4	SPARE
SP5	SPARE
SP10	SPARE
SP11	SPARE

NO.	SYSTEM
SP12	SPARE
SP13	SPARE
SP14	SPARE
SP15	SPARE
SP16	SPARE
SP20	SPARE
SP21	SPARE
SP22	SPARE
SP23	SPARE
SP30	SPARE
SP31	SPARE
SP32	SPARE
SP33	SPARE
SP34	SPARE
SP35	SPARE
SP57	SPARE
SP60	SPARE
SP61	SPARE
SP62	SPARE
SP63	SPARE
SP69	SPARE
SP70	SPARE
V5	A/C & HEAT SYSTEM-DRIVER'S HTR
V7	A/C & HEAT SYSTEM-DRIVER'S HTR

CIRCUIT BREAKER CODE (CB)

NO.	PAGE	AMPERE	#PREVOST	LOCATION	FUNCTION
CB1	1	200A	560838	BAT JCT CPT	24V FEED A/C JCT BOX
CB3	1	70A	561767	BAT JCT CPT	12V FEED RR JCT BOX
CB4	1	90A	560298	BAT JCT CPT	12V FEED FR JCT BOX
CB6	1	90A	560298	BAT JCT CPT	24V FEED RR JCT BOX
CB7	1	90A	560298	BAT JCT CPT	24V FEED FR JCT BOX
CB9	1	120A	560465	A/C JCT CPT	EVAPORATOR FAN MOTOR
CB10	2	8A	561791	FR JCT PANEL	MASTER SWITCH
CB11	1	25A	561795	BAT JCT PANEL	24V HOT WIRE FEED RR & FR
CB12	15	15A	561793	FR JCT PANEL	WATER BOOSTER PUMP
CB13	10	8A	561791	FR JCT PANEL	LUGGAGE CPT LTS
CB16	2	8A	561791	RR JCT BOX	ENGINE-RR CTR & START SW
CB17	1	25A	561795	BAT JCT PANEL	12V HOT WIRE FEED RR & FR
CB18	2	8A	561791	RR JCT BOX	ENGINE-FR CTR SW
CB19	3	15A	561793	RR JCT BOX	DDEC III E.C.M. POWER
CB20	3	15A	561793	RR JCT BOX	DDEC III E.C.M. POWER
CB21	3	6A	561790	RR JCT BOX	DDEC III 12V IGNITION
CB22	27	15A	561793	GALLEY	GALLEY BATTERY CHARGER
CB23	26-27	8A	560828	GALLEY	GALLEY CONTAINER RH
CB24	26-27	8A	560828	GALLEY	GALLEY CONTAINER LH
CB25	26-27	6A	560827	GALLEY	GALLEY LAMP
CB26	8	10A	561792	RR JCT BOX	BACK-UP LTS & ALARM
CB27	5	8A	561791	FR JCT PANEL	24V IGN DASH ACCESSORIES
CB29	5	20A	561794	FR JCT PANEL	ELECTRICAL HORNS
CB30	5	10A	561793	FR JCT PANEL	FIRE ALARM & WATER HTR TIMER
CB31	5	8A	561791	FR JCT PANEL	AIR DRYER
CB35	6	6A	561790	FR JCT PANEL	FOG & HAZARD SW
CB36	6	15A	561793	FR JCT PANEL	FOG LTS
CB37	6	8A	561791	FR JCT PANEL	HEAD & MULTI-FUNC. SW
CB38	6	10A	561792	FR JCT PANEL	MARKER LTS
CB39	6	6A	561791	FR JCT PANEL	12VI DASHBOARD-SPEEDO & TACHO
CB40	6	8A	561791	FR JCT PANEL	FR & RR CLEARANCE & ID. LTS
CB42	6	10A	561792	FR JCT PANEL	RR MARKER,TAIL,LICENCE LTS
CB43	6	20A	561794	FR JCT PANEL	HEADLAMP (HI)
CB44	6	15A	561793	FR JCT PANEL	HEADLAMP (LO)
CB45	7	10A	561792	FR JCT PANEL	MULTI-FUNC. SW (WIPER CTR)
CB48	8	6A	561790	FR JCT PANEL	STOP SW
CB49	8	15A	561793	RR JCT BOX	LH STOP LTS
CB50	11	6A	561790	RR JCT BOX	HAT RACK LIGHTING
CB51	8	20A	561794	FR JCT PANEL	RH STOP & CYCLOP LTS
CB52	14	6A	561790	FR JCT PANEL	HOSTESS & PASSENGER CHIME
CB55	11	10A	561792	FR JCT PANEL	AISLE LTS
CB56	11	8A	561791	RR JCT BOX	EMERGENCY EXIT LTS
CB59	12	8A	561791	FR JCT PANEL	DRIVER'S LTS SW.
CB60	12	15A	561793	RR JCT BOX	READING LTS LH
CB61	12	15A	561793	RR JCT BOX	READING LTS RH
CB63	13	8A	562293	FR SERVICE CPT	110V FLUORESCENT LH
CB64	13	8A	562293	FR SERVICE CPT	110V FLUORESCENT RH
CB65	13	15A	561793	RR JCT BOX	24V FLUORESCENT RH
CB66	13	15A	561793	RR JCT BOX	24V FLUORESCENT LH
CB67	16	10A	561792	A/C AUX UNIT	AUXILIARY A/C FAN
CB68	16	10A	561792	A/C AUX UNIT	AUXILIARY A/C FAN
CB70	15-16	8A	561791	FR JCT PANEL	BLOWER CUT-IN RELAY
CB71	16	8A	561791	A/C AUX UNIT	AUXILIARY A/C TEMP CTRL
CB72	16	6A	561790	RR JCT BOX	AUXILIARY A/C COMPR. CLUTCH
CB74	16	20A	561794	RR JCT BOX	AUXILIARY A/C UNIT POWER
CB75	26-27	20A	561794	RR JCT BOX	GALLEY
CB79	15-16	10A	561792	FR JCT PANEL	DRIVER'S HTR FAN

CIRCUIT BREAKER CODE (CB)

Page F : 1

NO.	PAGE	AMPERE	#PREVOST	LOCATION	FUNCTION
CB83	4	20A	561794	RR JCT BOX	WORLD TRANSMISSION VIM POWER
CB86	20	8A	561791	RR JCT BOX	LAVATORY PUMP
CB89	20	8A	561791	RR JCT BOX	LAVATORY LIGHTING
CB92	19	6A	561790	FR JCT PANEL	SPEED SW & KNEELING SYST.
CB94	12	8A	561791	FR JCT PANEL	READING LTS & GENERAL LTS MAIN SW
CB102	28-29	15A	561793	FR JCT PANEL	SOUND SYSTEM
CB104	24	6A	561790	FR JCT PANEL	ABS E.C.U.
CB105	24	20A	561794	FR JCT PANEL	ABS E.C.U.
CB106	24	10A	561792	FR SERV JCT BOX	ABS E.C.U.
CB107	24	10A	561792	FR SERV JCT BOX	ABS E.C.U.
CB109	20	8A	561791	RR JCT PANEL	LAVATORY EXH. FAN
CB117	18	8A	561791	FR JCT PANEL	RR VIEW MIRROR
CB118	22	20A	561794	FR JCT PANEL	LUGGAGE DOOR LOCK MOTOR
CB119	22	3A	561797	FR JCT PANEL	LUGGAGE UNLOCK TT LT & SW
CB120	22	20A	561794	FR JCT PANEL	LUGGAGE DOOR LOCK MOTOR
CB121	18	10A	561792	FR JCT PANEL	CIGAR LIGHTER
CB125	7	20A	561794	FR JCT PANEL	DIRECTIONAL LTS LH
CB126	7	20A	561794	FR JCT PANEL	DIRECTIONAL LTS RH
CB129	17	15A	561793	RR JCT BOX	WATER HEATER
CB130	5	6A	561790	RR JCT BOX	FAN CLUTCH RADIATOR
CB131	30	40A	560703	BAT JCT CPT	INVERTER
CB132	17	15A	561793	RR JCT BOX	WATER HEATER
CB133	28-29	15A	561793	FR JCT PANEL	SOUND SYSTEM
CB134	16	15A	561793	A/C JCT BOX	CONDENSER FAN MOTOR
CB135	16	15A	561793	A/C JCT BOX	CONDENSER FAN MOTOR
CB136	16	15A	561793	A/C JCT BOX	CONDENSER FAN MOTOR
CB137	16	15A	561793	A/C JCT BOX	CONDENSER FAN MOTOR

CIRCUIT BREAKER CODE (CB)

Page F : 1

NO.	PAGE	AMPERE	#PREVOST	LOCATION	FUNCTION
CB1	1	200A	560838	BAT JCT CPT	24V FEED A/C JCT BOX
CB3	1	70A	561767	BAT JCT CPT	12V FEED RR JCT BOX
CB4	1	90A	560298	BAT JCT CPT	12V FEED FR JCT BOX
CB6	1	90A	560298	BAT JCT CPT	24V FEED RR JCT BOX
CB7	1	90A	560298	BAT JCT CPT	24V FEED FR JCT BOX
CB9	1	120A	560465	A/C JCT CPT	EVAPORATOR FAN MOTOR
CB10	2	8A	561791	FR JCT PANEL	MASTER SWITCH
CB11	1	25A	561795	BAT JCT PANEL	24V HOT WIRE FEED RR & FR
CB12	15	15A	561793	FR JCT PANEL	WATER BOOSTER PUMP
CB13	10	8A	561791	FR JCT PANEL	LUGGAGE CPT LTS
CB16	2	8A	561791	RR JCT BOX	ENGINE-RR CTR & START SW
CB17	1	25A	561795	BAT JCT PANEL	12V HOT WIRE FEED RR & FR
CB18	2	6A	561791	RR JCT BOX	ENGINE-FR CTR SW
CB19	3	15A	561793	RR JCT BOX	DDEC III E.C.M. POWER
CB20	3	15A	561793	RR JCT BOX	DDEC III E.C.M. POWER
CB21	3	6A	561790	RR JCT BOX	DDEC III 12V IGNITION
CB22	27	15A	561793	GALLEY	GALLEY BATTERY CHARGER
CB23	26-27	8A	560828	GALLEY	GALLEY CONTAINER RH
CB24	26-27	8A	560828	GALLEY	GALLEY CONTAINER LH
CB25	26-27	6A	560827	GALLEY	GALLEY LAMP
CB26	8	10A	561792	RR JCT BOX	BACK-UP LTS & ALARM
CB27	5	8A	561791	FR JCT PANEL	24V IGN DASH ACCESSORIES
CB29	5	20A	561794	FR JCT PANEL	ELECTRICAL HORNS
CB30	5	10A	561793	FR JCT PANEL	FIRE ALARM & WATER HTR TIMER
CB31	5	8A	561791	FR JCT PANEL	AIR DRYER
CB35	6	6A	561790	FR JCT PANEL	FOG & HAZARD SW
CB36	6	15A	561793	FR JCT PANEL	FOG LTS
CB37	6	8A	561791	FR JCT PANEL	HEAD & MULTI-FUNC. SW
CB38	6	10A	561792	FR JCT PANEL	MARKER LTS
CB39	6	6A	561791	FR JCT PANEL	12VI DASHBOARD-SPEEDO & TACHO
CB40	6	8A	561791	FR JCT PANEL	FR & RR CLEARANCE & ID. LTS
CB42	6	10A	561792	FR JCT PANEL	RR MARKER,TAIL,LICENCE LTS
CB43	6	20A	561794	FR JCT PANEL	HEADLAMP (HI)
CB44	6	15A	561793	FR JCT PANEL	HEADLAMP (LO)
CB45	7	10A	561792	FR JCT PANEL	MULTI-FUNC. SW (WIPER CTR)
CB48	8	6A	561790	FR JCT PANEL	STOP SW
CB49	8	15A	561793	RR JCT BOX	LH STOP LTS
CB50	11	6A	561790	RR JCT BOX	HAT RACK LIGHTING
CB51	8	20A	561794	FR JCT PANEL	RH STOP & CYCLOP LTS
CB52	14	6A	561790	FR JCT PANEL	HOSTESS & PASSENGER CHIME
CB55	11	10A	561792	FR JCT PANEL	AISLE LTS
CB56	11	8A	561791	RR JCT BOX	EMERGENCY EXIT LTS
CB59	12	8A	561791	FR JCT PANEL	DRIVER'S LTS SW.
CB60	12	15A	561793	RR JCT BOX	READING LTS LH
CB61	12	15A	561793	RR JCT BOX	READING LTS RH
CB63	13	8A	562293	FR SERVICE CPT	110V FLUORESCENT LH
CB64	13	8A	562293	FR SERVICE CPT	110V FLUORESCENT RH
CB65	13	15A	561793	RR JCT BOX	24V FLUORESCENT RH
CB66	13	15A	561793	RR JCT BOX	24V FLUORESCENT LH
CB67	16	10A	561792	A/C AUX UNIT	AUXILIARY A/C FAN
CB68	16	10A	561792	A/C AUX UNIT	AUXILIARY A/C FAN
CB70	15-16	8A	561791	FR JCT PANEL	BLOWER CUT-IN RELAY
CB71	16	8A	561791	A/C AUX UNIT	AUXILIARY A/C TEMP CTRL
CB72	16	6A	561790	RR JCT BOX	AUXILIARY A/C COMPR. CLUTCH
CB74	16	20A	561794	RR JCT BOX	AUXILIARY A/C UNIT POWER
CB75	26-27	20A	561794	RR JCT BOX	GALLEY
CB79	15-16	10A	561792	FR JCT PANEL	DRIVER'S HTR FAN

CIRCUIT BREAKER CODE (CB)

Page F : 1

NO.	PAGE	AMPERE	#PREVOST	LOCATION	FUNCTION
CB83	4	20A	561794	RR JCT BOX	WORLD TRANSMISSION VIM POWER
CB86	20	8A	561791	RR JCT BOX	LAVATORY PUMP
CB89	20	8A	561791	RR JCT BOX	LAVATORY LIGHTING
CB92	19	6A	561790	FR JCT PANEL	SPEED SW & KNEELING SYST.
CB94	12	8A	561791	FR JCT PANEL	READING LTS & GENERAL LTS MAIN SW
CB102	28-29	15A	561793	FR JCT PANEL	SOUND SYSTEM
CB104	24	6A	561790	FR JCT PANEL	ABS E.C.U.
CB105	24	20A	561794	FR JCT PANEL	ABS E.C.U.
CB106	24	10A	561792	FR SERV JCT BOX	ABS E.C.U.
CB107	24	10A	561792	FR SERV JCT BOX	ABS E.C.U.
CB109	20	8A	561791	RR JCT PANEL	LAVATORY EXH. FAN
CB117	18	8A	561791	FR JCT PANEL	RR VIEW MIRROR
CB118	22	20A	561794	FR JCT PANEL	LUGGAGE DOOR LOCK MOTOR
CB119	22	3A	561797	FR JCT PANEL	LUGGAGE UNLOCK TT LT & SW
CB120	22	20A	561794	FR JCT PANEL	LUGGAGE DOOR LOCK MOTOR
CB121	18	10A	561792	FR JCT PANEL	CIGAR LIGHTER
CB125	7	20A	561794	FR JCT PANEL	DIRECTIONAL LTS LH
CB126	7	20A	561794	FR JCT PANEL	DIRECTIONAL LTS RH
CB129	17	15A	561793	RR JCT BOX	WATER HEATER
CB130	5	6A	561790	RR JCT BOX	FAN CLUTCH RADIATOR
CB131	30	40A	560703	BAT JCT CPT	INVERTER
CB132	17	15A	561793	RR JCT BOX	WATER HEATER
CB133	28-29	15A	561793	FR JCT PANEL	SOUND SYSTEM
CB134	16	15A	561793	A/C JCT BOX	CONDENSER FAN MOTOR
CB135	16	15A	561793	A/C JCT BOX	CONDENSER FAN MOTOR
CB136	16	15A	561793	A/C JCT BOX	CONDENSER FAN MOTOR
CB137	16	15A	561793	A/C JCT BOX	CONDENSER FAN MOTOR

CIRCUIT BREAKER CODE (CB)

NO.	PAGE	AMPERE	*PREVOST	LOCATION	FUNCTION
CB1	1	200A	560838	BAT JCT CPT	24V FEED A/C JCT BOX
CB3	1	70A	561767	BAT JCT CPT	12V FEED RR JCT BOX
CB4	1	90A	560298	BAT JCT CPT	12V FEED FR JCT BOX
CB6	1	90A	560298	BAT JCT CPT	24V FEED RR JCT BOX
CB7	1	90A	560298	BAT JCT CPT	24V FEED FR JCT BOX
CB9	1	120A	560465	A/C JCT CPT	EVAPORATOR FAN MOTOR
CB10	2	8A	561791	FR JCT PANEL	MASTER SWITCH
CB11	1	25A	561795	BAT JCT PANEL	24V HOT WIRE FEED RR & FR
CB12	15	15A	561793	FR JCT PANEL	WATER BOOSTER PUMP
CB13	10	8A	561791	FR JCT PANEL	LUGGAGE CPT LTS
CB16	2	8A	561791	RR JCT BOX	ENGINE-RR CTR & START SW
CB17	1	25A	561795	BAT JCT PANEL	12V HOT WIRE FEED RR & FR
CB18	2	6A	561791	RR JCT BOX	ENGINE-FR CTR SW
CB19	3	15A	561793	RR JCT BOX	DDEC III E.C.M. POWER
CB20	3	15A	561793	RR JCT BOX	DDEC III E.C.M. POWER
CB21	3	6A	561790	RR JCT BOX	DDEC III 12V IGNITION
CB22	27	15A	561793	GALLEY	GALLEY BATTERY CHARGER
CB23	26-27	8A	560828	GALLEY	GALLEY CONTAINER RH
CB24	26-27	8A	560828	GALLEY	GALLEY CONTAINER LH
CB25	26-27	6A	560827	GALLEY	GALLEY LAMP
CB26	8	10A	561792	RR JCT BOX	BACK-UP LTS & ALARM
CB27	5	8A	561791	FR JCT PANEL	24V IGN DASH ACCESSORIES
CB29	5	20A	561794	FR JCT PANEL	ELECTRICAL HORNS
CB30	5	10A	561793	FR JCT PANEL	FIRE ALARM & WATER HTR TIMER
CB31	5	8A	561791	FR JCT PANEL	AIR DRYER
CB35	6	6A	561790	FR JCT PANEL	FOG & HAZARD SW
CB36	6	15A	561793	FR JCT PANEL	FOG LTS
CB37	6	8A	561791	FR JCT PANEL	HEAD & MULTI-FUNC. SW
CB38	6	10A	561792	FR JCT PANEL	MARKER LTS
CB39	6	6A	561791	FR JCT PANEL	12VI DASHBOARD-SPEEDO & TACHO
CB40	6	8A	561791	FR JCT PANEL	FR & RR CLEARANCE & ID. LTS
CB42	6	10A	561792	FR JCT PANEL	RR MARKER,TAIL,LICENCE LTS
CB43	6	20A	561794	FR JCT PANEL	HEADLAMP (HI)
CB44	6	15A	561793	FR JCT PANEL	HEADLAMP (LO)
CB45	7	10A	561792	FR JCT PANEL	MULTI-FUNC. SW (WIPER CTR)
CB48	8	6A	561790	FR JCT PANEL	STOP SW
CB49	8	15A	561793	RR JCT BOX	LH STOP LTS
CB50	11	6A	561790	RR JCT BOX	HAT RACK LIGHTING
CB51	8	20A	561794	FR JCT PANEL	RH STOP & CYCLOP LTS
CB52	14	6A	561790	FR JCT PANEL	HOSTESS & PASSENGER CHIME
CB55	11	10A	561792	FR JCT PANEL	AISLE LTS
CB56	11	8A	561791	RR JCT BOX	EMERGENCY EXIT LTS
CB59	12	8A	561791	FR JCT PANEL	DRIVER'S LTS SW.
CB60	12	15A	561793	RR JCT BOX	READING LTS LH
CB61	12	15A	561793	RR JCT BOX	READING LTS RH
CB63	13	8A	562293	FR SERVICE CPT	110V FLUORESCENT LH
CB64	13	8A	562293	FR SERVICE CPT	110V FLUORESCENT RH
CB65	13	15A	561793	RR JCT BOX	24V FLUORESCENT RH
CB66	13	15A	561793	RR JCT BOX	24V FLUORESCENT LH
CB67	16	10A	561792	A/C AUX UNIT	AUXILIARY A/C FAN
CB68	16	10A	561792	A/C AUX UNIT	AUXILIARY A/C FAN
CB70	15-16	8A	561791	FR JCT PANEL	BLOWER CUT-IN RELAY
CB71	16	8A	561791	A/C AUX UNIT	AUXILIARY A/C TEMP CTRL
CB72	16	6A	561790	RR JCT BOX	AUXILIARY A/C COMPR. CLUTCH
CB74	16	20A	561794	RR JCT BOX	AUXILIARY A/C UNIT POWER
CB75	26-27	20A	561794	RR JCT BOX	GALLEY
CB79	15-16	10A	561792	FR JCT PANEL	DRIVER'S HTR FAN

CIRCUIT BREAKER CODE (CB)

Page F : 1

NO.	PAGE	AMPERE	*PREVOST	LOCATION	FUNCTION
CB83	4	20A	561794	RR JCT BOX	WORLD TRANSMISSION VIM POWER
CB86	20	8A	561791	RR JCT BOX	LAVATORY PUMP
CB89	20	8A	561791	RR JCT BOX	LAVATORY LIGHTING
CB90	1	30A	870690	BAT JCT PANEL	12V SOUND SYSTEM
CB91	1	30A	870690	BAT JCT PANEL	24V SOUND SYSTEM
CB92	19	6A	561790	FR JCT PANEL	SPEED SW & KNEELING SYST.
CB94	12	8A	561791	FR JCT PANEL	READING LTS & GENERAL LTS MAIN SW
CB95	28	10A	561792	SND SYS JCT PAN	24V AMPLIFEEDING
CB96	28	10A	561792	SND SYS JCT PAN	24V VIDEO SYSTEM
CB97	28	10A	561792	SND SYS JCT PAN	24V B/U AMPLIFEEDING
CB98	28	10A	561792	SND SYS JCT PAN	12V RADIO FEEDING
CB102	28-29	15A	561793	FR JCT PANEL	SOUND SYSTEM *** PRIOR REV. 010
CB104	24	6A	561790	FR JCT PANEL	ABS E.C.U.
CB105	24	20A	561794	FR JCT PANEL	ABS E.C.U.
CB106	24	10A	561792	FR SERV JCT BOX	ABS E.C.U.
CB107	24	10A	561792	FR SERV JCT BOX	ABS E.C.U.
CB109	20	8A	561791	RR JCT PANEL	LAVATORY EXH. FAN
CB117	18	8A	561791	FR JCT PANEL	RR VIEW MIRROR
CB118	22	20A	561794	FR JCT PANEL	LUGGAGE DOOR LOCK MOTOR
CB119	22	3A	561797	FR JCT PANEL	LUGGAGE UNLOCK TT LT & SW
CB120	22	20A	561794	FR JCT PANEL	LUGGAGE DOOR LOCK MOTOR
CB121	18	10A	561792	FR JCT PANEL	CIGAR LIGHTER
CB125	7	20A	561794	FR JCT PANEL	DIRECTIONAL LTS LH
CB126	7	20A	561794	FR JCT PANEL	DIRECTIONAL LTS RH
CB129	17	15A	561793	RR JCT BOX	WATER HEATER
CB130	5	6A	561790	RR JCT BOX	FAN CLUTCH RADIATOR
CB131	30	40A	560703	BAT JCT CPT	INVERTER
CB132	17	15A	561793	RR JCT BOX	WATER HEATER
CB133	28-29	15A	561793	FR JCT PANEL	SOUND SYSTEM *** PRIOR REV. 010
CB134	16	15A	561793	A/C JCT BOX	CONDENSER FAN MOTOR
CB135	16	15A	561793	A/C JCT BOX	CONDENSER FAN MOTOR
CB136	16	15A	561793	A/C JCT BOX	CONDENSER FAN MOTOR
CB137	16	15A	561793	A/C JCT BOX	CONDENSER FAN MOTOR

NO.	PAGE	AMPERE	•PREVOST	LOCATION	FUNCTION
CB1	1	200A	560838	BAT JCT CPT	24V FEED A/C JCT BOX
CB3	1	70A	561767	BAT JCT CPT	12V FEED RR JCT BOX
CB4	1	90A	560298	BAT JCT CPT	12V FEED FR JCT BOX
CB5	16	40A	560703	A/C JCT BOX	CONDENSER FAN MOTOR
CB6	1	90A	560298	BAT JCT CPT	24V FEED RR JCT BOX
CB7	1	90A	560298	BAT JCT CPT	24V FEED FR JCT BOX
CB8	16	40A	560703	A/C JCT BOX	CONDENSER FAN MOTOR
CB9	1	120A	560465	A/C JCT BOX	EVAPORATOR FAN MOTOR
CB10	2	8A	561791	FR JCT PANEL	MASTER SWITCH
CB11	1	25A	561795	BAT JCT PANEL	24V HOT WIRE FEED RR & FR
CB12	15	15A	561793	FR JCT PANEL	WATER BOOSTER PUMP
CB13	10	8A	561791	FR JCT PANEL	LUGGAGE CPT LTS
CB16	2	8A	561791	RR JCT BOX	ENGINE-RR CTR & START SW
CB17	1	25A	561795	BAT JCT PANEL	12V HOT WIRE FEED RR & FR
CB18	2	6A	561791	RR JCT BOX	ENGINE-FR CTR SW
CB19	3	15A	561793	RR JCT BOX	DDEC III E.C.M. POWER
CB20	3	15A	561793	RR JCT BOX	DDEC III E.C.M. POWER
CB21	3	6A	561790	RR JCT BOX	DDEC III 12V IGNITION
CB22	27	15A	561793	GALLEY	GALLEY BATTERY CHARGER
CB23	26-27	8A	560828	GALLEY	GALLEY CONTAINER RH
CB24	26-27	8A	560828	GALLEY	GALLEY CONTAINER LH
CB25	26-27	6A	560827	GALLEY	GALLEY LAMP
CB26	8	10A	561792	RR JCT BOX	BACK-UP LTS & ALARM
CB27	5	8A	561791	FR JCT PANEL	24V IGN DASH ACCESSORIES
CB29	5	20A	561794	FR JCT PANEL	ELECTRICAL HORNS
CB30	5	10A	561793	FR JCT PANEL	FIRE ALARM & WATER HTR TIMER
CB31	5	8A	561791	FR JCT PANEL	AIR DRYER
CB35	6	6A	561790	FR JCT PANEL	FOG & HAZARD SW
CB36	6	15A	561793	FR JCT PANEL	FOG LTS
CB37	6	8A	561791	FR JCT PANEL	HEAD & MULTI-FUNC. SW
CB38	6	10A	561792	FR JCT PANEL	MARKER LTS
CB39	6	6A	561791	FR JCT PANEL	12VI DASHBOARD-SPEEDO & TACHO
CB40	6	8A	561791	FR JCT PANEL	FR & RR CLEARANCE & ID. LTS
CB42	6	10A	561792	FR JCT PANEL	RR MARKER.TAIL.LICENCE LTS
CB43	6	20A	561794	FR JCT PANEL	HEADLAMP (HI)
CB44	6	15A	561793	FR JCT PANEL	HEADLAMP (LO)
CB45	7	10A	561792	FR JCT PANEL	MULTI-FUNC. SW (WIPER CTR)
CB48	8	6A	561790	FR JCT PANEL	STOP SW
CB49	8	15A	561793	RR JCT BOX	LH STOP LTS
CB50	11	6A	561790	RR JCT BOX	HAT RACK LIGHTING
CB51	8	20A	561794	FR JCT PANEL	RH STOP & CYCLOP LTS
CB52	14	6A	561790	FR JCT PANEL	HOSTESS & PASSENGER CHIME
CB55	11	10A	561792	FR JCT PANEL	AISLE LTS
CB56	11	8A	561791	RR JCT BOX	EMERGENCY EXIT LTS
CB59	12	8A	561791	FR JCT PANEL	DRIVER'S LTS SW.
CB60	12	15A	561793	RR JCT BOX	READING LTS LH
CB61	12	15A	561793	RR JCT BOX	READING LTS RH
CB63	13	8A	562293	FR SERVICE CPT	110V FLUORESCENT LH
CB64	13	8A	562293	FR SERVICE CPT	110V FLUORESCENT RH
CB65	13	15A	561793	RR JCT BOX	24V FLUORESCENT RH
CB66	13	15A	561793	RR JCT BOX	24V FLUORESCENT LH
CB67	16	10A	561792	A/C AUX UNIT	AUXILIARY A/C FAN
CB68	16	10A	561792	A/C AUX UNIT	AUXILIARY A/C FAN
CB70	15-16	8A	561791	FR JCT PANEL	BLOWER CUT-IN RELAY
CB71	16	8A	561791	A/C AUX UNIT	AUXILIARY A/C TEMP CTRL
CB72	16	6A	561790	RR JCT BOX	AUXILIARY A/C COMPR. CLUTCH
CB74	16	20A	561794	RR JCT BOX	AUXILIARY A/C UNIT POWER
CB75	26-27	20A	561794	RR JCT BOX	GALLEY
CB79	15-16	10A	561792	FR JCT PANEL	DRIVER'S HTR FAN

CIRCUIT BREAKER CODE (CB) PAGE F : 1

NO.	PAGE	AMPERE	•PREVOST	LOCATION	FUNCTION
CB83	4	20A	561794	RR JCT BOX	WORLD TRANSMISSION VIM POWER
CB86	20	8A	561791	RR JCT BOX	LAVATORY PUMP
CB89	20	8A	561791	RR JCT BOX	LAVATORY LIGHTING
CB90	1	30A	870690	BAT JCT PANEL	12V SOUND SYSTEM
CB91	1	30A	870690	BAT JCT PANEL	24V SOUND SYSTEM
CB92	19	6A	561790	FR JCT PANEL	SPEED SW & KNEELING SYST.
CB94	12	8A	561791	FR JCT PANEL	READING LTS & GENERAL LTS MAIN SW
CB95	28	10A	561792	SND SYS JCT PAN	24V AMPLI FEEDING
CB96	28	10A	561792	SND SYS JCT PAN	24V VIDEO SYSTEM
CB97	28	10A	561792	SND SYS JCT PAN	24V B/U AMPLI FEEDING
CB98	28	10A	561792	SND SYS JCT PAN	12V RADIO FEEDING
CB102	28-29	15A	561793	FR JCT PANEL	SOUND SYSTEM *** PRIOR REV. 010
CB104	24	6A	561790	FR JCT PANEL	ABS E.C.U.
CB105	24	20A	561794	FR JCT PANEL	ABS E.C.U.
CB106	24	10A	561792	FR SERV JCT BOX	ABS E.C.U.
CB107	24	10A	561792	FR SERV JCT BOX	ABS E.C.U.
CB109	20	8A	561791	RR JCT PANEL	LAVATORY EXH. FAN
CB117	18	8A	561791	FR JCT PANEL	RR VIEW MIRROR
CB118	22	20A	561794	FR JCT PANEL	LUGGAGE DOOR LOCK MOTOR
CB119	22	3A	561797	FR JCT PANEL	LUGGAGE UNLOCK TT LT & SW
CB120	22	20A	561794	FR JCT PANEL	LUGGAGE DOOR LOCK MOTOR
CB121	18	10A	561792	FR JCT PANEL	CIGAR LIGHTER
CB125	7	20A	561794	FR JCT PANEL	DIRECTIONAL LTS LH
CB126	7	20A	561794	FR JCT PANEL	DIRECTIONAL LTS RH
CB129	17	15A	561793	RR JCT BOX	WATER HEATER
CB130	5	6A	561790	RR JCT BOX	FAN CLUTCH RADIATOR
CB131	30	40A	560703	BAT JCT CPT	INVERTER
CB132	17	15A	561793	RR JCT BOX	WATER HEATER
CB133	28-29	15A	561793	FR JCT PANEL	SOUND SYSTEM *** PRIOR REV. 010

SCALE= 3.18

CONNECTORS CODE (C) Page G :1

No.	LOCATION	TYPE	(NB) CAVITY	*PIN HOUSING	*SOCKET HOUSING
C3	UNDER DASH-LH	AMP CPC	37	561645	561646
C7	FR SERVICE COMPT.-CLUTCH SW	ITT SS	3	561111	561080
C8	FR JCT PANEL-VCR FEED	AMP MNL	2	561248	561247
C11	LH CONSOLE SW-MIRROR	AMP MNL	3	561667	561550
C12	LH CONSOLE SW-MIRROR HTR	AMP MNL	2	561248	561247
C13	LH CONSOLE SW-MIRROR	AMP MNL	6	561552	561515
C14	UNDER DASH LH-MIRROR	AMP MNL	9	561670	561669
C15	UNDER DASH RH-MIRROR	AMP MNL	9	561670	561669
C18	UNDER DASH-FIRE ALARM	AMP MNL	2	560900	560898
C19	UNDER DASH-A/C & HEAT SYST.	TC	10	561072	561110
C20	RR JCT BOX DIODES	AMP MNL	9	561670	561669
C21	LUGGAGE COMPT.-LOCK DOOR MOT.	PED	2	-------	562076
C22	ENGINE COMPT.-CYCLOP LT	PED WP	2	561566	561590
C26	UNDER INSTRUMENT-PANEL RHEO.	TC	2	561030	560997
C29	FR SERVICE COMPT.-VIM FEED	PED WP	3	561781	561782
C32	RH CONSOLE-DRV TEMP SENSOR	BURNDY	3	-------	561104
C33	FRSERVICE COMPT.-DDEC VSS	PED WP	2	561566	561690
C34	RH CONSOLE-DRV TEMP CTRL	BURNDY	6	-------	561103
C35	RECIRULATED AIR GRIL.-SENSER	BURNDY	3	-------	561104
C36	LH CONSOLE SW-CRUISE ON/OFF	SWF	8	-------	561107
C37	LH CONSOLE SW-CRUISE SET	SWF	8	-------	561107
C38	LH CONSOLE SW-CRUISE RESUME	SWF	8	-------	561107
C41	UNDER DASH-FLASHER UNIT	TC	2	-------	561945
C49	LAVATORY NIGHT LTS	AMP MNL	2	560900	560898
C50	RH CONSOLE-PAS. TEMP CTRL	BURNDY	6	-------	561103
C51	RH CONSOLE SW-A/C & HEAT	SWF	8	-------	561107
C52	ENGINE COMPT.-COMPRESSOR 050	PED WP	2	561566	561690
C53	ENGINE COMPT.-COMPRESSOR 050	PED WP	2	561566	561690
C54	ENGINE COMPT.-COMPRESSOR 050	TC	1	560098	560697
C61	ENGINE COMPT.-FUEL FILTER	PED WP	2	561566	561690
C67	LH UNDER DASH-AMPLIF. RH SPK	BLAUPUNKT	2	561988	-------
C68	LH UNDER DASH-AMPLIF. RH SPK	BLAUPUNKT	2	561988	-------
C73	LH SW PANEL-MULTIFUNC.LEV.	AMP FF	8	561188	-------
C74	LH SW PANEL-MULTIFUNC.LEV.	AMP FF	6	-------	561108
C78	LUGGAGE COMPT.-DOOR LOCK 4 LH	AMP MNL	4	560851	560852
C79	LUGGAGE COMPT.-DOOR LOCK 4 RH	AMP MNL	4	560851	560852
C80	FR JCT PANEL-LUG.DOOR LOCK	AMP MNL	6	561552	561515
C81	LUGGAGE COMPT.-DOOR LOCK 1 LH	AMP MNL	4	560851	560852
C82	LUGGAGE COMPT.-DOOR LOCK 1 RH	AMP MNL	4	560851	560852
C83	UNDER DASH-FLASHER MODULE	TC	10	561072	561110
C84	UNDER DASH-A/C SYSTEM	TC	3	561091	561071
C85	LUGGAGE COMPT.-DOOR LOCK 3 RH	AMP MNL	4	560851	560852
C86	LUGGAGE COMPT.-DOOR LOCK 3 LH	AMP MNL	4	560851	560852
C88	RR END ROOF-CLEARANCE LTS	AMP MNL	2	560900	560898
C90	RR ROOF AUX. A/C THERMOST.	BURNDY	6	-------	561103
C91	RR ROOF AUX. A/C TMP SENSOR	BURNDY	6	-------	561104
C92	RR ROOF AUX. A/C FAN RH	TC	2	561030	560997
C93	RR ROOF AUX. A/C FAN LH	TC	2	561030	560997
C94	RR ROOF AUX. A/C FAN RES LH	AMP MNL	2	560900	560898
C95	RR ROOF AUX. A/C FAN RES RH	AMP MNL	2	560900	560898
C96	RR ROOF AUX. A/C LIQ SOL VAL	TC	2	561030	560997
C97	RR ROOF AUX. A/C SHUT SOL VAL	AMPHENOL	2	-------	560412
C98	CONDENSER CPT.	ITT SS	4	561998	561999
C101	CONDENSER CPT.-A/C PRESS. SW	PED WP	2	561566	561690
C105	UNDER DASH RH-DRV LIQ SOL VL	TC	2	561030	560997
C106	UNDER DASH RH-DRV WTR VALVE	TC	2	561030	560997
C107	UNDER DASH RH-DRV HTR RH FAN	TC	2	561030	560997
C108	UNDER DASH RH-DRV HTR LH FAN	TC	2	561030	560997

CONNECTORS CODE (C) Page G :1

No.	LOCATION	TYPE	(NB) CAVITY	*PIN HOUSING	*SOCKET HOUSING
C111	LH CONSOLE SW-DRIVER.LTS	SWF	8	-------	561107
C112	LH CONSOLE SW-GENERAL LTS	SWF	8	-------	561107
C114	ENGINE DDEC-SPEED SIGNAL	PED WP	2	561566	561590
C115	RR JCT BOX-ENGINE ACCES.	DEUTSCH	40	562281	562284
C116	DRIVE AXLE COMPT.-AIR DRYER	PED MP	2	-------	562251
C119	ENGINE COMPT.-LH LOWER LAMP	PED WP	6	561606	561607
C120	ENGINE COMPT.-LH LOWER LAMP	PED WP	6	561606	561607
C123	HAT RACK-BALLAST RH	AMP MNL	6	561552	561515
C123	HAT RACK-BALLAST RH	AMP MNL	6	561552	561515
C124	HAT RACK-FLUORESCENT	AMP MNL	4	561551	561668
C125	HAT RACK-FLUORESCENT	AMP MNL	4	561551	561668
C126	HAT RACK-READING LTS	AMP MNL	2	560900	560898
C130	LH CONSOLE SW-READING LTS	SWF	8	-------	561107
C131	LH CONSOLE SW-LUG.DOOR LOCK	SWF	8	-------	561107
C132	LH CONSOLE SW-PAS.& HOS CHIME	SWF	8	-------	561107
C133	LH CONSOLE SW-JACOB OR RET.	SWF	8	-------	561107
C134	LH CONSOLE SW-GALLEY	SWF	8	-------	561107
C135	LH SW PANEL-ETHER	SWF	8	-------	561107
C136	LH CONSOLE SW-MIRROR HTR	SWF	8	-------	561107
C137	RH SW PANEL-HEAD LAMP	SWF	8	-------	561107
C138	RH SW PANEL-SPARE	SWF	8	-------	561107
C139	RH SW PANEL-FOG LAMP	SWF	8	-------	561107
C140	FR JCT PANEL-BAT.HI/LO	AMP MNL	2	560900	560898
C141	ENGINE COMPT.-B-UP ALARM	PED WP	2	561566	561590
C142	FR SERVICE CPT-LH MARKER LTS	ITT SS	3	561111	561080
C143	RR LH HAT RACK-FEEDING	AMP MNL	9	561661	561662
C144	RR RH HAT RACK-FEEDING	AMP MNL	9	561661	561662
C145	RH HAT RACK-BALLAST	AMP MNL	4	560851	560852
C146	FR SERVICE CPT-RH MARKER LTS	ITT SS	3	561111	561080
C147	RR ROOF LH-EMERGENCY EXIT LTS	AMP MNL	2	560900	560898
C148	RR ROOF RH-EMERGENCY EXIT LTS	AMP MNL	4	560851	560852
C149	LH HAT RACK-BALLAST	AMP MNL	4	560851	560852
C150	FR RH HAT RACK-10V FLUOR	AMP MNL	2	561248	561247
C151	FR LH HAT RACK-10V FLUOR	AMP MNL	2	561248	561247
C152	LH HAT RACK-GENERAL LTS	AMP MNL	3	561667	561550
C153	RH HAT RACK-GENERAL LTS	AMP MNL	3	561667	561550
C154	RH SW PANEL-HAZARD	SWF	8	-------	561107
C155	LH SW PANEL-FAST IDLE	SWF	8	-------	561107
C156	LH SW PANEL-STP ENG. OVER.	SWF	8	-------	561107
C158	RR ROOF AUX. A/C FEEDING	AMP MNL	3	561667	561550
C160	FR SERVICE CPT-INTERFACE	AMP CPC	37	561644	561646
C161	ENGINE DDEC III-ECM	PED	30	-------	561600
C162	ENGINE DDEC III-ACCESSORIES	PED WP	4	561610	561611
C163	ENGINE CPT-COOLANT PROBE	PED MP	2	-------	562350
C164	FR SERVICE JCT BOX	AMP CPC	22	561709	561710
C165	FR SERVICE JCT BOX	AMP CPC	16	561693	561691
C166	UNDER INSTRUMENT PANEL	AMP CPC	16	561639	561640
C167	FR SERVICE CPT-EL.FOOT PEDAL	PED WP	3	561781	561782
C168	FR SERVICE CPT-DDR	DEUTSCH	6	562360	-------
C169	FR SERVICE CPT-WORLD TR.VIW	AMP CPC	16	561638	561640
C172	ENGINE COMPT-WATER TANK HEAT.	PED WP	2	561566	561690
C173	LAV.PORTABLE-WATER TANK HEAT.	AMP MNL	2	560900	560898
C175	FR SERV CPT-WHEELING FEEDING	PED WP	3	561781	561782
C177	GALLEY-REFRIGERATOR	AMP MNL	2	561248	561247

CONNECTORS CODE (C) Page G :2

No.	LOCATION	TYPE	(NB) CAVITY	*PIN HOUSING	*SOCKET HOUSING
C179	RH HAT RACK-10V MONITOR	MOLEX	4	561477	561476
C180	FR SERV CPT-KNEEL DIODE	AMP MNL	9	561670	561699
C181	FR SERV CPT-WHEELCHAIR MODULE	AMP MNL	12	561735	561734
C182	FR SERVICE CPT-SPEED SW	AMP HDP	15	-------	562012
C184	FR SERV CPT-KNEEL MOD.CTRL	AMP MNL	3	-------	561550
C184	FR AXLE-KNEELING PROXIMITY SW	AMP MNL	3	561667	561550
C185	FR SERV CPT-KNEEL MOD.EXH.	AMP MNL	3	-------	561550
C187	FR SERVICE CPT-KNEEL MOD.BRK	AMP MNL	3	-------	561550
C187	FR SERVICE JCT BOX-RESISTORS	AMP MNL	6	561552	561515
C188	LH CONSOLE SW-KNEELING	SWF	8	-------	561107
C190	FR SERVICE CPT.-WORLD TR VIM	PED WP	30	-------	561600
C192	GALLEY-FEEDING	AMP CPC	3	561862	561847
C194	GALLEY SW-CONTAINER RH	SWF	8	-------	561107
C195	GALLEY SW-CONTAINER LH	SWF	8	-------	561107
C199	FR SERV.JCT BOX-SERVICE BRK	AMP MNL	3	561667	561550
C200	LH CONSOLE SW-24V FLUOR	SWF	8	-------	561107
C201	UNDER INSTRUMENT PANEL	AMP MNL	2	560900	560898
C202	UNDER INSTRUMENT PANEL	AMP CPC	9	561636	561637
C205	LH UNDER DASH-AMPLIF. LH SPK	BLAUPUNKT	2	561988	-------
C206	RH CONSOLE-FR DEFROSTER	TC	2	560930	560997
C207	RH CONSOLE-DRV RHEOSTAT	AMP MNL	6	561552	561515
C208	UNDER DASH-DRV HTR MODULE	AMP MNL	9	561670	561669
C209	UNDER DASH-DRV HTR MODULE	AMP MNL	9	561670	561669
C210	LH UNDER DASH-AMPLIF. LH SPK	BLAUPUNKT	2	561988	-------
C211	RH CONSOLE-VCR VOLUME	AMP MNL	4	561551	561668
C212	LH CONSOLE SW-VCR VIDEO	SWF	8	-------	561107
C213	FR ROOF-CLEARANCE L.T.	AMP MNL	2	560900	560898
C214	UNDER DASH PANEL-TACHOGRAPH	V.D.O.	8	-------	562041
C215	UNDER DASH PANEL-TACHOGRAPH	V.D.O.	8	-------	562043
C216	UNDER DASH PANEL-TACHOGRAPH	AMP MNL	4	560851	560852
C217	FR LH HAT RACK-SPEAKER	AMP MNL	4	561659	561660
C218	FR RH HAT RACK-SPEAKER	AMP MNL	4	561659	561660
C219	DASH RHEOSTAT-P.A. VOLUME	MOLEX	4	561477	561476
C220	LH UNDER DASH-P.A. VOLUME	AMP MNL	3	561667	561550
C221	LH UNDER DASH-AMPLIFIER FEED	AMP MNL	3	561550	561667
C222	LH UNDER DASH-P.A.RADIO	AMP MNL	9	561670	561669
C223	LH UNDER DASH-P.A.RADIO	AMP MNL	9	561670	561669
C224	LH UNDER DASH-P.A.RADIO FEED	AMP MNL	6	561552	561515
C225	LH UNDER DASH-PA MICRO OUTLET	AMP MNL	3	561667	561550
C226	LH UNDER DASH-PA MICRO OUTLET	AMP MNL	3	561667	561550
C227	RH CONSOLE-SPEAKER CONTROL SW	SWF	8	-------	561107
C229	LH UNDER DASH-P.A.SPEAKERS	AMP MNL	4	561659	561668
C230	ENG.CPT.-FUEL PRIME PUMP SW.	PED WP	2	561566	561690
C231	ENG.CPT.-FUEL PRIME PUMP	PED WP	2	561566	561690
C232	UNDER L.H.CONSOLE	MOLEX	4	561477	561476
C233	MICRO OUTLET SOCKET	MOLEX	4	561477	561476
C234	UNDER INSTRUMENT PANEL-VDO	AMP MNL	4	560851	560852
C235	UNDER INSTRUMENT PANEL-VDO	AMP MNL	4	560851	560852
C236	FR SERVICE CPT CENTER-ABS	AMP CPC	14	561585	561583
C237	FR AXLE CPT-ABS RH SENSOR	WABCO	2	641132	-------
C238	FR AXLE CPT-ABS RH VALVE	WABCO	3	-------	641098
C239	FR AXLE CPT-ABS LH VALVE	WABCO	3	-------	641098
C240	FR AXLE CPT-ABS LH SENSOR	WABCO	2	641132	-------
C241	DRIVE AXLE CPT-ABS	PED WP	6	561606	561607
C242	DRIVE AXLE CPT-ABS LH SENSOR	DEUTSCH	2	562486	562485
C243	DRIVE AXLE CPT-ABS LH VALVE	WABCO	3	-------	641098
C244	DRIVE AXLE CPT-ABS RH VALVE	WABCO	3	-------	641098

CONNECTORS CODE (C) Page G :2

No.	LOCATION	TYPE	(NB) CAVITY	*PIN HOUSING	*SOCKET HOUSING
C245	DRIVE AXLE CPT-ABS RH SENSOR	WABCO	2	641132	-------
C246	DRIVE AXLE CPT-ABS SENSOR	DEUTSCH	2	562486	562485
C247	FR SERVICE CPT-ABS MODULE	WABCO	35	-------	561094
C248	DRIVE AXLE CPT-ABS	PED WP	6	561606	561607
C249	FR SERVICE CPT-ABS/DDEC	PED WP	2	561566	561690
C250	RH SW PANEL-B/UP CANCEL	SWF	8	-------	561107
C251	RH SW PANEL-SEAT HTR	SWF	8	-------	561107
C252	LH SW PANEL-SWITCH LT	SWF	2	-------	561837
C254	FR SERVICE JCT BOX-ABS	AMP CPC	16	561693	561695
C255	RH CONSOLE-RADIO	AMP MNL	9	561670	561669
C257	ENGINE COMPT-WATER HEATER	AMP FF	6	-------	561186
C258	DRIVER GUARD WATER HTR TIMER	AMP FF	8	561188	562363
C259	ENGINE COMPT-WATER HEATER	TC	2	561597	-------
C260	ENGINE COMPT-WATER HEATER	TC	1	561073	-------
C261	ENGINE COMPT-WATER HEATER	TC	2	561597	-------
C266	BATTERY COMPT. LTS	AMP MNL	2	561248	561247
C267	LUGGAGE COMPT. LTS - 1	AMP MNL	2	561248	561247
C268	LUGGAGE COMPT. LTS - 2	AMP MNL	2	561248	561247
C269	LUGGAGE COMPT. LTS - 3 RH	AMP MNL	2	561248	561247
C270	LUGGAGE COMPT. LTS - 3 LH	AMP MNL	2	561248	561247
C271	LUGGAGE COMPT. LTS - 4	AMP MNL	2	561248	561247
C272	FR SERVICE CPT. LTS	AMP MNL	2	561248	561247
C274	FR JCT. PANEL-DIODES	AMP MNL	15	561987	561986
C276	FR JCT PANEL-ALARM BUZZER	BOSCH	5	-------	561183
C290	LUGGAGE CPT-DOOR LOCK	AMP MNL	4	560851	560852
C291	LUGGAGE CPT-DOOR LOCK	AMP MNL	4	560851	560852
C292	LUGGAGE CPT-DOOR LOCK	AMP MNL	4	560851	560852
C293	WIPER MOTOR	AMP FF	6	-------	561186
C294	UNDER DASH-WIPER SYST.FEED	AMP MNL	6	561552	561515
C295	UNDER DASH-WIPER PULSE GEN.	AMP FF	6	-------	561186
C296	FR SERVICE CPT-ABS LTS	ITT SS	3	561111	561080
C298	LH HAT RACK-AMPLI MODULE	MOLEX	6	-------	562464
C299	FR LH HAT RACK-AMPLI	MOLEX	10	-------	562465
C300	FR LH HAT RACK-AMPLI MODULE	MOLEX	6	-------	562464
C301	FR LH HAT RACK-AMPLI	MOLEX	10	-------	562465
C302	UNDER DASH-FLASHER MODULE	AMP MNL	2	560900	560898
C309	ENGINE DDEC III-ECM POWER	PED WP	5	-------	562345
C312	ENGINE DDEC III-ECM SIGNAL	PED WP	3	561781	561782
C313	ENGINE DDEC III-OUTPUT	PED WP	4	562398	-------
C314	FR SERVICE CPT-PRESS SW KNEEL	PED WP	2	561566	561690
C315	FR SERVICE CPT-KNEEL ALARM	PED WP	2	561566	561690
C316	FR SERVICE CPT-KNEEL ALARM	AMP MNL	2	560900	560898
C326	ENGINE DDEC III- MANUAL TR.	PED WP	4	561610	561611
C364	FR ROOF-DESTINATION SIGN	AMP MNL	3	561667	561550
C365	FR ROOF-DESTINATION SIGN	AMP MNL	2	560900	560898
C368	FR ROOF-DEST. SIGN BALLAST	AMP MNL	3	561667	561550
C369	FR ROOF-DEST. SIGN OPER SW.	TORRIX	5	-------	562110
C370	FR ROOF-DEST. SIGN FLUOR.	AMP MNL	2	560900	560898
C371	FR ROOF-DEST. SIGN FLUOR	AMP MNL	2	560900	560898
C372	FR ROOF-DEST. SIGN SPEED SW.	MOLEX	4	561477	561476

CONNECTORS CODE (C) Page G :2

No.	LOCATION	TYPE	(NB) CAVITY	*PIN HOUSING	*SOCKET HOUSING
C382	ENGINE GENERATOR 12 VAC RLY	PED WP	1	561605	561577
C383	LH UNDER DASH-MICRO W/O WIRE	AMP MNL	2	561248	561247
C384	LH UNDER DASH-MICRO W/O WIRE	AMP MNL	3	561550	561667
C385	BATTERY COMPT. ACC.	AMP MNL	12	561735	561734
C386	CONDENSER CPT-BYPASS VALVE	PED WP	2	561566	561590
C387	EVAPORATOR CPT-BYPASS VALVE	PED WP	2	561566	561590
C388	LH SW PANEL-MASTER SW	SWF	8	-------	561107
C389	EVAPORATOR CPT-WATER PUMP	PED WP	2	561566	561590
C390	CONDENSER CPT.-A/C JCT BOX	DEUTSCH	24	562280	562283
C391	CONDENSER CPT.-PRESS.SW	PED WP	2	561566	561590
C392	CONDENSER CPT.- MOTOR FAN	PED WP	2	561566	561590
C393	CONDENSER CPT.- MOTOR FAN	PED WP	2	561566	561590
C394	LH OVER CONSOLE- B-U MONITOR	AMP MNL	4	560851	560852
C395	LH OVER CONSOLE- B-U MONITOR	AMP MNL	5	-------	-------
C396	CONDENSER CPT.- MOTOR FAN	PED WP	2	561566	561590
C397	CONDENSER CPT.- MOTOR FAN	PED WP	2	561566	561590
C426	ENGINE 560 RAD.FAN CLUTCH	PED WP	3	561781	561782
C430	DRIVER GUARD WATER HTR TIMER	AMP FF	8	561188	562363
C500	FR JCT PANEL-PRODRIVER	MOLEX	6	562070	562069
C501	RH CONSOLE-PRODRIVER	PED MP	7	562433	-------
C502	DRIVER GUARD PRE-HTR SW.	SWF	8	-------	561107
C503	DRIVER GUARD PRE-HTR SW.	SWF	2	-------	561837
C504	DRIVER GUARD WEBASTO TIMER	AMP FF	8	561188	562363
C505	DRIVER GUARD ESPAR TIMER	AMP FF	3	-------	562034

SCALE= 3.18

No.	LOCATION	TYPE	(NB) CAVITY	*PIN CAVITY	*SOCKET HOUSING	HOUSING
C3	UNDER DASH-LH	AMP CPC	37		561645	561646
C7	FR SERVICE COMPT.-CLUTCH SW	ITT SS	3		561111	561080
C8	FR JCT PANEL-VCR FEED	AMP MNL	2		561248	561247
C11	LH CONSOLE SW-MIRROR	AMP MNL	3		561667	561550
C12	LH CONSOLE SW-MIRROR HTR	AMP MNL	2		561248	561247
C13	LH CONSOLE SW-MIRROR	AMP MNL	6		561552	561515
C14	UNDER DASH LH-MIRROR	AMP MNL	9		561670	561669
C15	UNDER DASH RH-MIRROR	AMP MNL	9		561670	561669
C18	UNDER DASH-FIRE ALARM	AMP MNL	2		560900	560898
C19	UNDER DASH-A/C & HEAT SYST.	TC	10		561072	561110
C20	RR JCT BOX DIODES	AMP MNL	9		561670	561669
C21	LUGGAGE COMPT.-LOCK DOOR MOT.	PED	2		-------	562076
C22	ENGINE COMPT.-CYLDOP LT	PED WP	2		561566	561590
C26	UNDER INSTRUMENT-PANEL RHEO.	TC	2		561030	560997
C29	FR SERVICE COMPT.-VIM FEED	PED WP	3		561781	561782
C32	RH CONSOLE-DRV TEMP SENSOR	BURNDY	3		-------	561104
C33	FRSERVICE COMPT.DDEC VSS	PED WP	2		561566	561690
C34	RH CONSOLE-DRV TEMP CTRL	BURNDY	6		-------	561103
C35	RECIRULATED AIR GRIL.-SENSER	BURNDY	3		-------	561104
C36	LH CONSOLE SW-CRUISE ON/OFF	SWF	8		-------	561107
C37	LH CONSOLE SW-CRUISE SET	SWF	8		-------	561107
C38	LH CONSOLE SW-CRUISE RESUME	SWF	8		-------	561107
C41	UNDER DASH-FLASHER UNIT	TC	2		-------	561945
C49	LAVATORY NIGHT LTS	AMP MNL	2		560900	560898
C50	RH CONSOLE-PAS. TEMP CTRL	BURNDY	6		-------	561103
C51	RH CONSOLE SW-A/C & HEAT	SWF	8		-------	561107
C52	ENGINE COMPT.-COMPRESSOR 05C	PED WP	2		561566	561690
C53	ENGINE COMPT.-COMPRESSOR 05C	PED WP	2		561566	561690
C54	ENGINE COMPT.-COMPRESSOR 05C	TC	1		560998	560697
C61	ENGINE COMPT.-FUEL FILTER	PED WP	2		561566	561690
C67	LH UNDER DASH-AMPLIF. RH SPK	BLAUPUNKT	2		561988	-------
C68	LH UNDER DASH-AMPLIF. RH SPK	BLAUPUNKT	2		561988	-------
C73	LH SW PANEL-MULTIFUNC.LEV.	AMP FF	8		561188	-------
C74	LH SW PANEL-MULTIFUNC.LEV.	AMP FF	6		-------	561108
C78	LUGGAGE COMPT.-DOOR LOCK 4 LH	AMP MNL	4		560851	560852
C79	LUGGAGE COMPT.-DOOR LOCK 4 RH	AMP MNL	4		560851	560852
C80	FR JCT PANEL-LUG.DOOR LOCK	AMP MNL	6		561552	561515
C81	LUGGAGE COMPT.-DOOR LOCK 1 LH	AMP MNL	4		560851	560852
C82	LUGGAGE COMPT.-DOOR LOCK 1 RH	AMP MNL	4		560851	560852
C83	UNDER DASH-FLASHER MODULE	TC	10		561072	561110
C84	UNDER DASH-A/C SYSTEM	TC	3		561091	561071
C85	LUGGAGE COMPT.-DOOR LOCK 3 RH	AMP MNL	4		560851	560852
C86	LUGGAGE COMPT.-DOOR LOCK 3 LH	AMP MNL	4		560851	560852
C88	RR END ROOF-CLEARANCE LTS	AMP MNL	2		560900	560898
C90	RR ROOF AUX. A/C THERMOST.	BURNDY	6		-------	561103
C91	RR ROOF AUX. A/C TMP SENSOR	BURNDY	6		-------	561104
C92	RR ROOF AUX. A/C FAN RH	TC	2		561030	560997
C93	RR ROOF AUX. A/C FAN LH	TC	2		561030	560997
C94	RR ROOF AUX. A/C FAN RES LH	AMP MNL	2		560900	560898
C95	RR ROOF AUX. A/C FAN RES RH	AMP MNL	2		560900	560898
C96	RR ROOF AUX. A/C LIQ SOL VAL	TC	2		561030	560997
C97	RR ROOF AUX. A/C SHUT SOL VAL	AMPHENOL	2		-------	560412
C98	CONDENSER CPT.	ITT SS	4		561998	561999
C101	CONDENSER CPT.-A/C PRESS. SW	PED WP	2		561566	561690
C105	UNDER DASH RH-DRV LIQ SOL VL	TC	2		561030	560997
C106	UNDER DASH RH-DRV WTR VALVE	TC	2		561030	560997
C107	UNDER DASH RH-DRV HTR FAN	TC	2		561030	560997
C108	UNDER DASH RH-DRV HTR LH FAN	TC	2		561030	560997

No.	LOCATION	TYPE	(NB) CAVITY	*PIN CAVITY	*SOCKET HOUSING	HOUSING
C111	LH CONSOLE SW-DRIVER.LTS	SWF	8		-------	561107
C112	LH CONSOLE SW-GENERAL LTS	SWF	8		-------	561107
C114	ENGINE DDEC-SPEED SIGNAL	PED WP	2		561566	561590
C115	RR JCT BOX-ENGINE ACCES.	DEUTSCH	40	562281	562284	
C116	DRIVE AXLE COMPT.-AIR DRYER	PED MP	2		-------	562251
C119	ENGINE COMPT.-LH LOWER LAMP	PED WP	6		561606	561607
C120	ENGINE COMPT.-LH LOWER LAMP	PED WP	6		561606	561607
C123	HAT RACK-BALLAST RH	AMP MNL	6		561552	561515
C123	HAT RACK-BALLAST RH	AMP MNL	6		561552	561515
C124	HAT RACK-FLUORESCENT	AMP MNL	4		561551	561668
C125	HAT RACK-FLUORESCENT	AMP MNL	4		561551	561668
C126	HAT RACK-READING LTS	AMP MNL	2		560900	560898
C130	LH CONSOLE SW-READING LTS	SWF	8		-------	561107
C131	LH CONSOLE SW-LUG.DOOR LOCK	SWF	8		-------	561107
C132	LH CONSOLE SW-PAS.& HOS CHIME	SWF	8		-------	561107
C133	LH CONSOLE SW-JACOB OR RET.	SWF	8		-------	561107
C134	LH CONSOLE SW-GALLEY	SWF	8		-------	561107
C135	LH SW PANEL-ETHER	SWF	8		-------	561107
C136	LH CONSOLE SW-MIRROR HTR	SWF	8		-------	561107
C137	RH SW PANEL-HEAD LAMP	SWF	8		-------	561107
C138	RH SW PANEL-SPARE	SWF	8		-------	561107
C139	RH SW PANEL-FOG LAMP	SWF	8		-------	561107
C140	FR JCT PANEL-BAT.HI/LO	AMP MNL	2		560900	560898
C141	ENGINE COMPT.-B/UP ALARM	PED WP	2		561566	561590
C142	FR SERVICE CPT-LH MARKER LTS	ITT SS	3		561111	561080
C143	RR LH HAT RACK-FEEDING	AMP MNL	9		561661	561662
C144	RR RH HAT RACK-FEEDING	AMP MNL	9		561661	561662
C145	RH HAT RACK-BALLAST	AMP MNL	4		560851	560852
C147	FR SERVICE CPT-RH MARKER LTS	ITT SS	3		561111	561080
C147	RR ROOF LH-EMERGENCY EXIT LTS	AMP MNL	2		560900	560898
C148	RR ROOF RH-EMERGENCY EXIT LTS	AMP MNL	4		560851	560852
C149	LH HAT RACK-BALLAST	AMP MNL	4		560851	560852
C150	FR RH HAT RACK-10V FLUOR	AMP MNL	2		561248	561247
C151	FR LH HAT RACK-10V FLUOR	AMP MNL	2		561248	561247
C152	LH HAT RACK-GENERAL LTS	AMP MNL	3		561667	561550
C153	LH HAT RACK-GENERAL LTS	AMP MNL	3		561667	561550
C154	RH SW PANEL-HAZARD	SWF	8		-------	561107
C155	LH SW PANEL-FAST IDLE	SWF	8		-------	561107
C156	LH SW PANEL-STP ENG. OVER.	SWF	8		-------	561107
C158	RR ROOF AUX. A/C FEEDING	AMP MNL	3		561667	561550
C160	FR SERVICE CPT-INTERFACE	AMP CPC	37		561644	561646
C161	ENGINE DDEC III-ECM	PED	30		-------	561600
C162	ENGINE DDEC III-ACCESSORIES	PED WP	4		561610	561611
C163	ENGINE CPT-COOLANT PROBE	PED WP			-------	562350
C164	FR SERVICE JCT BOX	AMP CPC	22		561709	561710
C165	FR SERVICE JCT BOX	AMP CPC	16		561693	561691
C166	UNDER INSTRUMENT PANEL	AMP CPC	16		561639	561640
C167	FR SERVICE CPT-EL.FOOT PEDAL	PED WP	3		561781	561782
C168	FR SERVICE CPT-DDR	DEUTSCH	6		562360	-------
C169	FR SERVICE CPT-WORLD TR. VIM	AMP CPC	16		561638	561640
C172	ENGINE COMPT-WATER TANK HEAT.	PED WP	2		561566	561590
C173	LAV.PORTABLE-WATER TANK HEAT.	AMP MNL	2		560900	560898
C175	FR SERV CPT-WHEELING FEEDING	PED WP	3		561781	561782
C177	GALLEY-REFRIGERATOR	AMP MNL	2		561248	561247

No.	LOCATION	TYPE	(NB) CAVITY	*PIN CAVITY	*SOCKET HOUSING	HOUSING
C179	RH HAT RACK-10V MONITOR	MOLEX	4		561477	561476
C180	FR SERV CPT-KNEEL DIODE	AMP MNL	9		561670	561669
C181	FR SERV CPT-WHEELING MODULE	AMP MNL	12		561735	561734
C182	FR SERVICE CPT-SPEED SW	AMP HDP		15	-------	562012
C184	FR SERV CPT-KNEEL MOD. CTRL	AMP MNL	3		-------	561550
C184	FR AXLE-KNEELING PROXIMITY SW	AMP MNL	3		561667	561550
C185	FR SERV CPT-KNEEL MOD. EXH.	AMP MNL	3		-------	561550
C187	FR SERV CPT-KNEEL MOD. BRK	AMP MNL	8		-------	561550
C187	FR SERVICE JCT BOX-RESISTORS	AMP MNL	6		561552	561515
C188	LH CONSOLE SW-KNEELING	SWF	8		-------	561107
C190	FR SERVICE CPT.-WORLD TR VIM	PED WP	30		-------	561600
C192	GALLEY-FEEDING	AMP CPC	3		561862	561847
C194	GALLEY SW-CONTAINER RH	SWF	8		-------	561107
C195	GALLEY SW-CONTAINER LH	SWF	8		-------	561107
C199	FR SERV.JCT BOX-SERVICE BRK	AMP MNL	3		561667	561550
C200	LH CONSOLE SW-24V FLUOR	SWF	8		-------	561107
C201	UNDER INSTRUMENT PANEL	AMP MNL	2		560900	560898
C202	UNDER INSTRUMENT PANEL	AMP CPC	9		561636	561637
C205	LH UNDER DASH-AMPLIF. LH SPK	BLAUPUNKT	2		561988	-------
C206	RH CONSOLE-FR DEFROSTER	TC	2		561030	560997
C207	RH CONSOLE-DRV RHEOSTAT	AMP MNL	6		561552	561515
C208	UNDER DASH-DRV HTR MODULE	AMP MNL	9		561670	561669
C209	UNDER DASH-DRV HTR MODULE	AMP MNL	9		561670	561669
C210	LH UNDER DASH-AMPLIF. LH SPK	BLAUPUNKT	2		561988	-------
C211	RH CONSOLE-VCR VOLUME	AMP MNL	4		561551	561668
C212	LH CONSOLE SW-VCR VIDEO	SWF	8		-------	561107
C213	FR ROOF-CLEARANCE LT	AMP MNL	2		560900	560898
C214	UNDER DASH PANEL-TACHOGRAPH	V.D.O.	8		-------	562043
C215	UNDER DASH PANEL-TACHOGRAPH	V.D.O.	8		-------	562043
C216	UNDER DASH PANEL-TACHOGRAPH	AMP MNL	4		560851	560852
C217	FR LH HAT RACK-SPEAKER	AMP MNL	4		561659	561660
C218	FR RH HAT RACK-SPEAKER	AMP MNL	4		561659	561660
C219	DASH RHEOSTAT-P.A.VOLUME	MOLEX	4		561477	561476
C220	LH UNDER DASH-P.A. VOLUME	AMP MNL	3		561667	561550
C221	LH UNDER DASH-AMPLIFIER FEED	AMP MNL	3		561550	561667
C222	LH UNDER DASH-P.A. RADIO	AMP MNL	9		561670	561669
C224	LH UNDER DASH-P.A. RADIO FEED	AMP MNL	6		561552	561515
C225	LH UNDER DASH-PA MICRO OUTLET	AMP MNL	3		561667	561550
C226	LH UNDER DASH-PA MICRO OUTLET	AMP MNL	3		561667	561550
C227	RH CONSOLE-SPEAKER CONTROL SW	SWF	8		-------	561107
C229	LH UNDER DASH-P.A.-DRV SPEAKERS	AMP MNL	4		561551	561668
C230	ENG.CPT.-FUEL PRIME PUMP SW.	PED WP	2		561566	561690
C231	ENG.CPT.-FUEL PRIME PUMP	PED WP	2		561566	561690
C232	UNDER L.H. CONSOLE	MOLEX	4		561477	561476
C233	MICRO OUTLET SOCKET	MOLEX	4		561477	561476
C234	UNDER INSTRUMENT PANEL-VDO	AMP MNL	4		560851	560852
C235	UNDER INSTRUMENT PANEL-VDO	AMP MNL	4		560851	560852
C236	FR SERVICE CPT CENTER-ABS	AMP CPC	14		561585	561583
C237	FR AXLE CPT-ABS RH SENSOR	WABCO	2		641132	-------
C238	FR AXLE CPT-ABS RH VALVE	WABCO	3		-------	641098
C239	FR AXLE CPT-ABS LH VALVE	WABCO	3		-------	641098
C240	FR AXLE CPT-ABS LH SENSOR	WABCO	2		641132	-------
C241	DRIVE AXLE CPT-ABS	PED WP	6		561606	561607
C242	DRIVE AXLE CPT-ABS LH SENSOR	DEUTSCH	2		562486	562485
C243	DRIVE AXLE CPT-ABS LH VALVE	WABCO	3		-------	641098
C244	DRIVE AXLE CPT-ABS RH VALVE	WABCO	3		-------	641098

No.	LOCATION	TYPE	(NB) CAVITY	*PIN CAVITY	*SOCKET HOUSING	HOUSING
C245	DRIVE AXLE CPT-ABS RH SENSOR	WABCO	2		641132	-------
C245	DRIVE AXLE CPT-ABS RH SENSOR	DEUTSCH	2		562486	562485
C246	DRIVE AXLE CPT-ABS SPARE	PED WP	4		561610	561611
C247	FR SERVICE CPT-ABS MODULE	WABCO	35		-------	561094
C248	DRIVE AXLE CPT-ABS	PED WP	6		561606	561607
C249	FR SERVICE CPT-ABS/DOOR	PED WP	2		561566	561690
C250	RH SW PANEL-B/UP CANCEL	SWF	8		-------	561107
C251	RH SW PANEL-SEAT HTR	SWF	8		-------	561107
C252	LH SW PANEL-SWITCH LT	SWF	2		-------	561837
C254	FR SERVICE JCT BOX-ABS	AMP CPC	16		561693	561695
C255	RH CONSOLE-RADIO	AMP MNL	9		561670	561669
C257	ENGINE COMPT-WATER HEATER	AMP FF	6		-------	561186
C258	DRIVER GUARD WATER HTR TIMER	AMP FF	8		561188	562363
C259	ENGINE COMPT-WATER HEATER	TC	2		561597	-------
C260	ENGINE COMPT-WATER HEATER	TC	1		561073	-------
C261	ENGINE COMPT-WATER HEATER	TC	2		561597	-------
C266	BATTERY COMPT. LTS	AMP MNL	2		561248	561247
C267	LUGGAGE COMPT. LTS - 1	AMP MNL	2		561248	561247
C268	LUGGAGE COMPT. LTS - 2	AMP MNL	2		561248	561247
C269	LUGGAGE COMPT. LTS - 3 RH	AMP MNL	2		561248	561247
C270	LUGGAGE COMPT. LTS - 3 LH	AMP MNL	2		561248	561247
C271	LUGGAGE COMPT. LTS - 4	AMP MNL	2		561248	561247
C272	FR SERVICE CPT LTS	AMP MNL	2		561248	561247
C274	FR JCT PANEL-DIODES	AMP MNL	15		561987	561986
C276	FR JCT PANEL-ALARM BUZZER	BOSCH	5		-------	561183
C290	LUGGAGE CPT-DOOR LOCK	AMP MNL	4		560851	560852
C291	LUGGAGE CPT-DOOR LOCK	AMP MNL	4		560851	560852
C292	LUGGAGE CPT-DOOR LOCK	AMP MNL	4		560851	560852
C293	WIPER MOTOR	AMP FF	6		-------	561186
C294	UNDER DASH-WIPER SYST.FEED	AMP MNL	6		561552	561515
C295	UNDER DASH-WIPER PULSE GEN.	AMP FF	6		-------	561186
C296	FR SERVICE CPT-HEAD LTS	ITT SS	3		561111	561080
C298	FR LH HAT RACK-AMPLI	MOLEX	6		-------	562464
C299	FR LH HAT RACK-AMPLI	MOLEX	10		-------	562465
C473	FR LH HAT RACK-AMPLI	MOLEX	6		-------	562464
C301	FR LH HAT RACK-AMPLI	MOLEX	10		-------	562465
C302	UNDER DASH-FLASHER MODULE	AMP MNL	2		560900	560898
C309	ENGINE DDEC III-ECM POWER	PED WP	5		-------	562345
C312	ENGINE DDEC III-ECM SIGNAL	PED WP	3		561781	561782
C313	ENGINE DDEC III-ECM	PED WP	4		562398	-------
C314	FR SERVICE CPT-PRESS SW KNEEL	PED WP	2		561566	561690
C315	FR SERVICE CPT-KNEEL ALARM	PED WP	2		561566	561690
C316	FR SERVICE CPT-KNEEL ALARM	AMP MNL	2		560900	560898
C326	ENGINE DDEC III- MANUAL TR.	PED WP	4		561610	561611
C364	FR ROOF-DESTINATION SIGN	AMP MNL	3		561667	561550
C365	FR ROOF-DESTINATION SIGN	AMP MNL	2		560900	560898
C368	FR ROOF-DEST. SIGN BALLAST	AMP MNL	3		561667	561550
C369	FR ROOF-DEST. SIGN OPER SW.	TORRIX	5		-------	562110
C370	FR ROOF-DEST. SIGN FLUOR.	AMP MNL	2		560900	560898
C371	FR ROOF-DEST. SIGN FLUOR	AMP MNL	2		560900	560898
C372	FR ROOF-DEST. SIGN SPEED SW.	MOLEX	4		561477	561476

No.	LOCATION	TYPE	(NB) CAVITY	*PIN CAVITY	*SOCKET HOUSING	HOUSING
C382	ENGINE GENERATOR 12 VAC RLY	PED WP	1		561605	561577
C383	LH UNDER DASH-MICRO W/O WIRE	AMP MNL	2		561248	561247
C384	LH UNDER DASH-MICRO W/O WIRE	AMP MNL	3		561550	561667
C385	BATTERY COMPT. ACC.	AMP MNL	12		561735	561734
C386	CONDENSER CPT-BYPASS VALVE	PED WP	2		561566	561590
C387	EVAPORATOR CPT-BYPASS VALVE	PED WP	2		561566	561590
C388	LH SW PANEL-MASTER SW	SWF	8		-------	561107
C389	EVAPORATOR CPT-WATER PUMP	PED WP	2		561566	561590
C390	CONDENSER CPT.-A/C JCT BOX	DEUTSCH	24		562280	562283
C391	CONDENSER CPT.-PRESS.SW	PED WP	2		561566	561590
C392	CONDENSER CPT.- MOTOR FAN	PED WP	2		561566	561590
C393	CONDENSER CPT.- MOTOR FAN	PED WP	2		561566	561590
C394	LH OVER CONSOLE- B/U MONITOR	AMP MNL	4		560851	560852
C395	LH OVER CONSOLE- B/U MONITOR	AMP MNL	5		-------	-------
C396	CONDENSER CPT.- MOTOR FAN	PED WP	2		561566	561590
C397	CONDENSER CPT.- MOTOR FAN	PED WP	2		561566	561590
C426	ENGINE 560 RAD.FAN CLUTCH	PED WP	3		561781	561782
C430	DRIVER GUARD WATER HTR TIMER	AMP FF	8		561188	562363
C456	WORLD TRANSM.-RETARDER ACCUM.	PED WP	2		-------	562427
C457	WORLD TRANSM-MAIN CONNECTOR	DEUTSCH	31		562572	562436
C458	WORLD TRANSM.-TURBINE SP.SENS	PED WP	2		-------	562426
C459	WORLD TRANSM.-ENGINE SP.SENS.	PED WP	2		-------	562426
C460	WORLD TRANSM.-SPEED SENSOR	ITT	2		-------	562241
C461	WORLD TRANSM.-RETARDER TEMP.	PED WP	2		561566	561590
C462	WORLD TRANSM.-RETARD SOL.	PED MP	2		-------	562426
C463	WORLD TRANSM.-SENSOR CONN.	DEUTSCH	16		562570	562571
C464	FR SERVICE CPT-SOL CONN. W.T.	PED MP	12		-------	562574
C465	LH CONSOLE-DRIVER SELECTOR	T & BET	10		-------	562429
C466	FR SERVICE CPT.-RESIS. MOD.	PED WP	3		-------	562428
C467	FR SERVICE CPT-RESIS. MOD.	PED WP	3		-------	562428
C468	FR SERVICE CPT.-VIM MOD. W.T.	PED MP	18		-------	562573
C470	FR SERVICE CPT.-SILENT 1000	AMP MNL	2		561248	561247
C471	FR SERVICE CPT.-SILENT 1000	AMP MNL	2		561248	561247
C472	FR SERVICE CPT.-SILENT 1000	PED WP	2		561566	561690
C473	FR SERVICE CPT.-SILENT 1000	AMP MNL	3		561667	561550
C500	FR JCT PANEL-PRODRIVER	MOLEX	6		562070	562069
C501	RH CONSOLE-PRODRIVER	PED MP	7		562433	-------
C502	DRIVER GUARD PRE-HTR SW.	SWF	8		-------	561107
C503	DRIVER GUARD PRE-HTR SW.	SWF	2		-------	561837
C504	DRIVER GUARD WEBASTO TIMER	AMP FF	8		561188	562363
C505	DRIVER GUARD ESPAR TIMER	AMP FF	3		-------	562034
C508	RR JCT BOX-FAN CLUTCH MOD	AMP MNL	6		561552	561515
CA	FR SERVICE CPT-ECU WORLD TR. T & BET		34		-------	562419
CB	FR SERVICE CPT-ECU WORLD TR. T & BET		34		-------	562420

No.	LOCATION	(NB) TYPE	*PIN CAVITY	*SOCKET HOUSING	HOUSING	
C3	UNDER DASH-LH	AMP CPC	37	561645	561646	
C7	FR SERVICE COMPT.-CLUTCH SW	ITT SS	3	561111	561080	
C8	FR JCT PANEL VCR FEED	AMP MNL	2	561248	561247	PRIOR REV 010
C11	LH CONSOLE SW-MIRROR	AMP MNL	3	561667	561550	
C12	LH CONSOLE SW-MIRROR HTR	AMP MNL	2	561248	561247	
C13	LH CONSOLE SW-MIRROR	AMP MNL	6	561552	561515	
C14	UNDER DASH LH-MIRROR	AMP MNL	9	561670	561669	
C15	UNDER DASH RH-MIRROR	AMP MNL	9	561670	561669	
C18	UNDER DASH-FIRE ALARM	AMP MNL	2	560900	560898	
C19	UNDER DASH-A/C & HEAT SYST. TC		10	561072	561110	
C20	RR JCT BOX DIODES	AMP MNL	9	561670	561669	
C21	LUGGAGE COMPT.-LOCK DOOR MOT.-PED		2	-------	562076	
C22	ENGINE COMPT.-CYCLOP LT	PED WP	2	561566	561690	
C26	UNDER INSTRUMENT-PANEL RHEO.TC		2	561030	560997	
C29	FR SERVICE COMPT.-VIM FEED	PED WP	3	561781	561782	
C32	RH CONSOLE-DRV TEMP SENSOR	BURNDY	3	-------	56104	
C33	FRSERVICE COMPT.-DDEC VSS	PED WP	2	561566	561690	
C34	RH CONSOLE-DRV TEMP. CTRL	BURNDY	6	-------	56103	
C35	RECIRULATED AIR GRL.-SENSER	BURNDY	3	-------	56104	
C36	LH CONSOLE SW-CRUISE ON/OFF	SWF	8	-------	561107	
C37	LH CONSOLE SW-CRUISE SET	SWF	8	-------	561107	
C38	LH CONSOLE SW-CRUISE RESUME	SWF	8	-------	561107	
C41	UNDER DASH-FLASHER UNIT	TC	2	-------	561945	
C49	LAVATORY NIGHT LTS	AMP MNL	2	560900	560898	
C50	RH CONSOLE-PAS. TEMP. CTRL	BURNDY	6	-------	56103	
C51	RH CONSOLE SW-A/C & HEAT	SWF	8	-------	561107	
C52	ENGINE COMPT.-COMPRESSOR 05G	PED WP	2	561566	561690	
C53	ENGINE COMPT.-COMPRESSOR 05G	PED WP	2	561566	561690	
C54	ENGINE COMPT.-COMPRESSOR 05G	TC	1	560098	560697	
C61	ENGINE COMPT.-FUEL FILTER	PED WP	2	561566	561690	
C67	LH UNDER DASH-AMPLIF. RH SPK	BLAUPUNKT	2	561988	-------	
C68	LH UNDER DASH-AMPLIF. RH SPK	BLAUPUNKT	2	561988	-------	
C73	LH SW. PANEL-MULTIFUNC.LEV.	AMP FF	8	561188	-------	
C74	LH SW. PANEL-MULTIFUNC.LEV.	AMP FF	6	-------	561108	
C78	LUGGAGE COMPT.-DOOR LOCK 4 LH	AMP MNL	4	560851	560852	
C79	LUGGAGE COMPT.-DOOR LOCK 4 RH	AMP MNL	4	560851	560852	
C80	FR JCT PANEL-LUG.DOOR LOCK	AMP MNL	6	561552	561515	
C81	LUGGAGE COMPT.-DOOR LOCK 1 LH	AMP MNL	4	560851	560852	
C82	LUGGAGE COMPT.-DOOR LOCK 1 RH	AMP MNL	4	560851	560852	
C83	UNDER DASH-FLASHER MODULE	TC	10	561072	561110	
C84	UNDER DASH-A/C SYSTEM	TC	3	560991	561071	
C85	LUGGAGE COMPT.-DOOR LOCK 3 RH	AMP MNL	4	560851	560852	
C86	LUGGAGE COMPT.-DOOR LOCK 3 LH	AMP MNL	4	560851	560852	
C88	RR END ROOF-CLEARANCE LTS	AMP MNL	2	560900	560898	
C90	RR ROOF AUX. A/C THERMOST.	BURNDY	6	-------	56103	
C91	RR ROOF AUX. A/C TMP SENSOR	BURNDY	6	-------	56104	
C92	RR ROOF AUX. A/C FAN RH	TC	2	561030	560997	
C93	RR ROOF AUX. A/C FAN LH	TC	2	561030	560997	
C94	RR ROOF AUX. A/C FAN RES LH	AMP MNL	2	560900	560898	
C95	RR ROOF AUX. A/C FAN RES RH	AMP MNL	2	560900	560898	
C96	RR ROOF AUX. A/C LIQ SOL VAL.	TC	2	561030	560997	
C97	RR ROOF AUX. A/C SHUT SOL.VAL	AMPHENOL	2	-------	560412	
C98	CONDENSER CPT.	ITT SS	4	561998	561999	
C101	CONDENSER CPT.-A/C PRESS. SW	PED WP	2	561566	561690	
C105	UNDER DASH RH-DRV LIQ SOL VL	TC	2	561030	560997	
C106	UNDER DASH RH-DRV WTR VALVE	TC	2	561030	560997	
C107	UNDER DASH RH-DRV HTR RH FAN	TC	2	561030	560997	
C108	UNDER DASH RH-DRV HTR LH FAN	TC	2	561030	560997	

No.	LOCATION	(NB) TYPE	*PIN CAVITY	*SOCKET HOUSING	HOUSING	
C111	LH CONSOLE SW-DRIVER'L TS	SWF	8	-------	561107	
C112	LH CONSOLE SW-GENERAL LTS	SWF	8	-------	561107	
C114	ENGINE DDEC-SPEED SIGNAL	PED WP	2	561566	561590	
C115	RR JCT BOX-ENGINE ACCES.	DEUTSCH	40	562281	562284	
C116	DRIVE AXLE COMPT.-AIR DRYER	PED MP	2	-------	562251	
C119	ENGINE COMPT.-LH LOWER LAMP	PED WP	6	561606	561607	
C120	ENGINE COMPT.-LH LOWER LAMP	PED WP	6	561606	561607	
C123	HAT RACK-BALLAST RH	AMP MNL	6	561552	561515	
C123	HAT RACK-BALLAST RH	AMP MNL	6	561552	561515	
C124	HAT RACK-FLUORESCENT	AMP MNL	4	561551	561668	
C125	HAT RACK-FLUORESCENT	AMP MNL	4	561551	561668	
C126	HAT RACK-RECEIVING LTS	AMP MNL	2	560900	560898	
C130	LH CONSOLE SW-READING LTS	SWF	8	-------	561107	
C131	LH CONSOLE SW-LUGGDOOR LOCK	SWF	8	-------	561107	
C132	LH CONSOLE SW-PAS & HOS CHIME	SWF	8	-------	561107	
C133	LH CONSOLE SW-JACOB OR RET.	SWF	8	-------	561107	
C134	LH CONSOLE SW-GALLEY	SWF	8	-------	561107	
C135	LH SW PANEL-ETHER	SWF	8	-------	561107	
C136	LH CONSOLE SW-MIRROR HTR	SWF	8	-------	561107	
C137	RH SW PANEL-HEAD LAMP	SWF	8	-------	561107	
C138	RH SW PANEL-SPARE	SWF	8	-------	561107	
C139	RH SW PANEL-FGG LAMP	SWF	8	-------	561107	
C140	FR JCT PANEL-BAT.HI/LO	AMP MNL	2	560900	560898	
C141	ENGINE COMPT.-B/UP ALARM	PED WP	2	561566	561690	
C142	FR SERVICE CPT-LH MARKER LTS	ITT SS	3	561111	561080	
C143	RR JCT HAT RACK-FEEDING	AMP MNL	9	561662	-------	
C144	RR RH HAT RACK-FEEDING	AMP MNL	9	561661	561662	
C145	RH HAT RACK-BALLAST	AMP MNL	4	560851	560852	
C146	FR SERVICE CPT-MARKER LTS	ITT SS	3	561111	561080	
C148	RR ROOF LH-EMERGENCY EXIT LTS	AMP MNL	2	560900	560898	
C149	RR ROOF RH-EMERGENCY EXIT LTS	AMP MNL	2	560900	560898	
C149	LH HAT RACK-BALLAST	AMP MNL	4	560851	560852	
C150	FR RH HAT RACK-110V FLUOR	AMP MNL	2	561248	561247	
C151	FR LH HAT RACK-110V FLUOR	AMP MNL	2	561247	561248	
C152	LH HAT RACK-GENERAL LTS	AMP MNL	3	561667	561550	
C153	LH HAT RACK-GENERAL LTS	AMP MNL	3	561667	561550	
C154	RH SW PANEL-HAZARD	SWF	8	-------	561107	
C155	LH SW PANEL-FIRE IDLE	SWF	8	-------	561107	
C156	LH CONSOLE SW-STOP ENG. OVER.	SWF	8	-------	561107	
C158	RR ROOF AUX. A/C FEEDING	AMP MNL	3	561667	561550	
C159	RR ROOF AUX. A/C FRONTEVAPORATOR	AMP CPC	37	561644	561646	
C161	ENGINE DDEC III-ECM	PED	30	-------	561600	
C162	ENGINE DDEC III-ACCESSORIES	PED WP	4	561610	561611	
C163	ENGINE CPT-COOLANT PROBE	PED MP	2	-------	562350	
C164	FR SERVICE JCT BOX	AMP CPC	22	561709	561710	
C165	FR SERVICE JCT BOX	AMP CPC	16	561693	561695	
C166	UNDER INSTRUMENT PANEL	AMP CPC	16	561639	561640	
C167	FR SERVICE CPT-EL.FOOT PEDAL	PED WP	3	561781	561782	
C168	FR SERVICE CPT-DDR	DEUTSCH	6	562360	-------	
C169	FR SERVICE CPT-WORLD TR. VIM	AMP CPC	16	561638	561640	
C172	ENGINE COMPT-WATER TANK HEAT	AMP FF	3	561666	561690	
C173	LAV.PORTABLE-WATER TANK HEAT	AMP MNL	2	560900	560898	
C175	FR SERV CPT-KNEELING FEEDING	PED WP	3	561781	561782	
C177	GALLEY-REFRIGERATOR	AMP MNL	2	561248	561247	

No.	LOCATION	(NB) TYPE	*PIN CAVITY	*SOCKET HOUSING	HOUSING	
C179	RH HAT RACK-110V MONITOR	MOLEX	4	561477	561476	PRIOR REV. 010
C180	FR SERV CPT-KNEEL DIODE	AMP MNL	9	561670	561669	
C181	FR SERV CPT-WHEELING MODULE	AMP MNL	12	561735,	561734	
C182	FR SERVICE CPT-SPEED SW	AMP HDP	15	-------	562012	
C184	FR SERVICE CPT-KNEEL MOD. CTRL	AMP MNL	3	-------	561550	
C184	FR AXLE-KNEELING PROXIMITY SW	AMP MNL	3	561667	561550	
C185	FR SERVICE CPT-KNEEL MOD.EXH.	AMP MNL	3	-------	561550	
C187	FR SERV CPT-KNEEL MOD.BRK	AMP MNL	3	-------	561550	
C187	FR SERVICE JCT BOX-RESISTORS	AMP MNL	6	561552	561515	
C188	LH CONSOLE SW-KNEELING	SWF	8	-------	561107	
C190	FR SERVICE CPT.-WORLD TP VIM	PED WP	30	-------	560600	
C192	GALLEY-FEEDING	AMP CPC	3	561862	561847	
C194	GALLEY SW-CONTAINER RH	SWF	8	-------	561107	
C195	GALLEY SW-CONTAINER LH	SWF	8	-------	561107	
C199	FR SERV. JCT BOX-SERVICE BRK	AMP MNL	3	561667	561550	
C200	LH CONSOLE SW-24V FLUOR	SWF	8	-------	561107	
C201	UNDER INSTRUMENT PANEL	AMP	2	560900	560898	PRIOR REV. 010
C202	UNDER INSTRUMENT PANEL	AMP CPC	9	561636	561637	
C205	LH UNDER DASH-AMPLIF. LH SPK	BLAUPUNKT	2	561988	-------	
C206	RH CONSOLE-FR DEFROSTER	TC	2	561030	560997	
C207	RH CONSOLE-DRV RHEOSTAT	AMP MNL	6	561552	561515	
C208	UNDER DASH-DRV HTR MODULE	AMP MNL	9	561670	561669	
C209	UNDER DASH-DRV HTR MODULE	AMP MNL	9	561670	561669	
C210	LH UNDER DASH-AMPLIF. LH SPK	BLAUPUNKT	2	561988	-------	
C211	RH CONSOLE-VCR VOLUME	AMP MNL	4	561551	561662	PRIOR REV. 010
C212	LH CONSOLE SW-VCR VIDEO	SWF	8	-------	561107	PRIOR REV. 010
C213	FR ROOF-CLEARANCE LT	AMP MNL	2	560900	560898	
C214	UNDER DASH PANEL-TACHOGRAPH	V.D.O.	8	-------	560280	
C215	UNDER DASH PANEL-TACHOGRAPH	V.D.O.	8	-------	562043	
C216	UNDER DASH PANEL-TACHOGRAPH	AMP MNL	4	560851	560852	
C217	FR LH HAT RACK-SPEAKER	AMP MNL	4	561659	561660	
C218	FR RH HAT RACK-SPEAKER	AMP MNL	4	561659	561660	
C219	DASH-WHEELING PULSE GEN. VOLUME	MOLEX	4	561477	561476	PRIOR REV. 010
C220	LH UNDER DASH-P.A. VOLUME	AMP MNL	3	561667	561550	PRIOR REV. 010
C221	LH HAT RACK-AMPLIFIER FEED	AMP MNL	3	561667	561550	PRIOR REV. 010
C222	LH UNDER DASH-P.A. RADIO	AMP MNL	9	561670	561669	PRIOR REV. 010
C223	LH UNDER DASH-P.A. RADIO	AMP MNL	9	561670	561669	PRIOR REV. 010
C224	LH HAT RACK-PA & RADIO FEED	AMP MNL	6	561552	561515	PRIOR REV. 010
C225	LH UNDER DASH-PA MICRO OUTLET	AMP MNL	3	561667	561550	PRIOR REV. 010
C226	LH UNDER DASH-PA MICRO OUTLET	AMP MNL	3	561667	561550	PRIOR REV. 010
C227	RH CONSOLE-SPEAKER CONTROL SW	SWF	8	-------	561107	PRIOR REV. 010
C229	LH UNDER DASH-PA DRV SPEAKERS	AMP MNL	4	561551	561668	PRIOR REV. 010
C230	FR AXLE CPT-AIR PUMP SW.	PED WP	2	561566	561690	
C231	ENG.CPT.-FUEL PRIME PUMP	PED WP	2	561566	561690	
C232	UNDER L.H. CONSOLE	MOLEX	4	561477	561476	PRIOR REV. 010
C233	MICRO OUTLET SOCKET	MOLEX	4	561477	561476	PRIOR REV. 010
C234	UNDER INSTRUMENT PANEL-VDO	AMP MNL	4	560851	560852	PRIOR REV. 010
C234	UNDER INSTRUMENT PANEL-VDO	AMP FF	8	-------	562363	
C235	UNDER INSTRUMENT PANEL-VDO	AMP MNL	4	560851	560852	PRIOR REV. 010
C235	UNDER INSTRUMENT PANEL-VDO	AMP FF	8	-------	562363	
C236	FR SERVICE CPT CENTER-ABS	AMP CPC	14	561585	561583	
C237	FR AXLE CPT-ABS RH SENSOR	WABCO	2	641132	-------	
C238	FR AXLE CPT-ABS RH VALVE	WABCO	3	-------	641098	
C239	FR AXLE CPT-ABS LH VALVE	WABCO	3	-------	641098	
C240	FR AXLE CPT-ABS LH SENSOR	WABCO	2	641132	-------	
C241	DRIVE AXLE CPT-ABS	PED WP	6	561606	561607	
C242	DRIVE AXLE CPT-ABS LH SENSOR	DEUTSCH	2	562486	562485	

No.	LOCATION	(NB) TYPE	*PIN CAVITY	*SOCKET HOUSING	HOUSING	
C243	DRIVE AXLE CPT-ABS LH VALVE	WABCO	3	-------	641098	
C244	DRIVE AXLE CPT-ABS RH VALVE	WABCO	3	-------	641098	
C245	DRIVE AXLE CPT-ABS RH SENSOR	WABCO	2	641132	-------	PRIOR S570
C245	DRIVE AXLE CPT-ABS RH SENSOR	DEUTSCH	2	562486	562485	EFF.W/S570
C246	DRIVE AXLE CPT-ABS SPARE	PED WP	4	561610	561611	
C247	FR SERVICE CPT-ABS BYPASS	WABCO	35	-------	561094	
C248	DRIVE AXLE CPT-ABS	PED WP	6	561606	561607	
C249	FR SERVICE CPT-ABS/ODEC	PED WP	2	561566	561690	
C250	RH SW PANEL-B/UP CANCEL	SWF	8	-------	561107	
C251	RH SW PANEL-SEAT HTR	SWF	8	-------	561107	
C252	LH SW PANEL-SWITCH LT	PED WP	2	561566	561837	
C254	FR SERVICE JCT BOX-ABS	AMP CPC	16	561693	561695	
C255	RH CONSOLE-RADIO	AMP MNL	9	561670	561669	PRIOR REV 010
C257	ENGINE COMPT-WATER HEATER	AMP FF	6	-------	561186	
C258	DRIVER GUARD WATER HTR TIMER	AMP FF	8	561188	562363	
C259	ENGINE COMPT-WATER HEATER	TC	2	561597	-------	
C260	ENGINE COMPT-WATER HEATER	TC	1	561073	-------	
C261	ENGINE COMPT-WATER HEATER	TC	2	561597	-------	
C266	BATTERY COMPT.-LTS	AMP MNL	2	561248	561247	
C267	LUGGAGE COMPT.-LTS - 1	AMP MNL	2	561248	561247	
C268	LUGGAGE COMPT.-LTS - 2	AMP MNL	2	561248	561247	
C269	LUGGAGE COMPT.-LTS - 3 RH	AMP MNL	2	561248	561247	
C270	LUGGAGE COMPT.-LTS - 3 LH	AMP MNL	2	561248	561247	
C271	LUGGAGE COMPT.-LTS - 4	AMP MNL	2	561248	561247	
C272	FR JCT PANEL-LTS	AMP MNL	2	561248	561247	
C274	FR JCT PANEL-DIODES	AMP MNL	15	561987	561986	
C276	FR JCT PANEL-ALARM BUZZER	BOSCH	5	-------	561183	
C279	LUGGAGE CPT-DOOR LOCK	AMP PED	4	560851	560852	
C291	LUGGAGE CPT-DOOR LOCK	AMP MNL	4	560851	560852	
C292	LUGGAGE CPT-DOOR LOCK	AMP MNL	4	560851	560852	
C293	WIPER MOTOR	AMP FF	6	-------	561186	
C294	UNDER DASH-WIPER SYST.FEED	AMP MNL	6	561552	561515	
C295	UNDER DASH-WIPER PULSE GEN.	AMP FF	6	-------	561186	
C296	FR SERVICE CPT-HEAD LTS	ITT SS	3	561111	561080	
C298	FR LH HAT RACK-AMPLI	MOLEX	6	-------	562464	PRIOR REV 010
C299	FR LH HAT RACK-AMPLI	MOLEX	10	-------	562465	PRIOR REV 010
C300	FR LH HAT RACK-AMPLI	MOLEX	6	-------	562464	PRIOR REV 010
C301	FR LH HAT RACK-AMPLI	MOLEX	10	-------	562465	PRIOR REV 010
C302	UNDER DASH-FLASHER MODULE	AMP MNL	2	560900	560898	
C309	ENGINE DDEC III-ECM POWER	PED WP	3	-------	562345	
C312	ENGINE DDEC III-ECM SIGNAL	PED WP	3	561781	561782	
C313	ENGINE DDEC III-OUTPUT	PED WP	4	562398	-------	
C314	FR SERVICE CPT-PRESS SW KNEEL	PED WP	2	561566	561690	
C315	FR SERVICE CPT-KNEEL ALARM	PED WP	2	561566	561690	
C316	FR SERVICE CPT-KNEEL ALARM	AMP MNL	2	560900	560898	
C326	ENGINE DDEC III- MANUAL TR.	PED WP	4	561610	561611	
C364	FR ROOF-DESTINATION SIGN	AMP MNL	3	561667	561550	
C365	FR ROOF-DESTINATION SIGN	AMP MNL	2	560900	560898	
C368	FR ROOF-DEST. SIGN BALLAST	AMP MNL	3	561667	561550	
C369	FR ROOF-DEST. SIGN OPER SW.	TORRO	2	-------	56210	
C370	FR ROOF-DEST. SIGN FLUOR.	AMP MNL	2	560900	560898	
C371	FR ROOF-DEST. SIGN FLUOR.	AMP MNL	2	560900	560898	
C372	FR ROOF-DEST. SIGN SPEED SW.	MOLEX	4	561477	561476	

No.	LOCATION	(NB) TYPE	*PIN CAVITY	*SOCKET HOUSING	HOUSING	
C382	ENGINE GENERATOR 12 VAC RLY	PED WP	1	561605	561577	
C383	LH UNDER DASH-MICRO W/O WIRE	AMP MNL	2	561248	561247	PRIOR REV. 010
C384	LH UNDER DASH-MICRO W/O WIRE	AMP MNL	4	561550	561667	PRIOR REV. 010
C385	BATTERY COMPT.-ACC.	AMP MNL	12	561735	561734	
C386	CONDENSER CPT-BYPASS VALVE	PED WP	2	561566	561590	
C387	EVAPORATOR CPT-BYPASS VALVE	PED WP	2	561566	561590	
C388	LH SW PANEL-MASTER SW	SWF	8	-------	561107	
C389	EVAPORATOR CPT-WATER PUMP	PED WP	2	561566	561590	
C390	CONDENSER CPT.-A/C JCT BOX	DEUTSCH	24	562280	562283	
C391	CONDENSER CPT.-PRESS.SW	PED WP	2	561566	561590	
C392	CONDENSER CPT.-MOTOR FAN	PED WP	2	561566	561590	
C393	CONDENSER CPT.-MOTOR FAN	PED WP	2	561566	561590	
C394	LH OVER CONSOLE-B/U MONITOR	AMP MNL	4	560851	560852	
C395	LH OVER CONSOLE-B/U MONITOR	AMP MNL	5	-------	561666	
C396	CONDENSER CPT.-MOTOR FAN	PED WP	2	561566	561590	
C396	HAT RACK SPEAKER	MOLEX	4	562507	562503	
C397	CONDENSER CPT.-MOTOR FAN	PED WP	2	561566	561590	
C426	ENGINE 560 RAD.FAN CLUTCH	PED WP	3	561781	561782	
C430	DRIVER GUARD WATER HTR TIMER	AMP FF	8	561188	562363	
C450	SOUND SYS.CPT.-PANEL	MOLEX	4	562507	562503	
C451	WIRELESS MICRO-FIRST CPT BAG	MOLEX	2	562550	562549	
C452	UNDER DASH INSTR.PANEL	MOLEX	2	562550	562549	
C453	SOUND SYS.JCT.PANEL-VCP	PED WP	2	561566	561590	
C454	SOUND SYS.JCT.PAN.-FILT. VCP	PED WP	3	561566	561590	
C455	WIRELESS MICRO-FIRST CPT	PED WP	2	562554	562551	
C456	WORLD TRANSM.-RETARDER ACCUM.	PED MP	2	-------	562427	
C457	WORLD TRANSM.-MAIN CONNECTOR	DEUTSCH	31	562572	562536	
C458	WORLD TRANSM.-TURBINE SP.SENS	PED MP	2	-------	562426	
C459	WORLD TRANSM.-ENGINE SP.SENS.	PED MP	2	-------	562426	
C460	WORLD TRANSM.-SPEED SENSOR	ITT	2	-------	562541	
C461	WORLD TRANSM.-RETARDER TEMP.	PED MP	2	561566	561590	
C462	WORLD TRANSM.-RETARD SOL.	PED MP	2	-------	562426	
C463	WORLD TRANSM.-SENSOR CONN.	DEUTSCH	16	562570	562571	
C464	FR SERVICE CPT.-DDL CONN W.T.	PED MP	12	-------	562574	
C465	LH CONSOLE-SHIFTER SELECTOR	T & BET	10	-------	562429	
C466	FR SERVICE CPT.-RESIS. MOD.	PED WP	3	-------	562428	
C467	FR SERVICE CPT.-RESIS. MOD.	PED MP	3	-------	562428	
C468	FR SERVICE CPT.-VIM MOD.W.T.	PED MP	18	-------	562573	
C470	FR SERVICE CPT-SILENT 1000	AMP MNL	2	561248	561247	
C471	FR SERVICE CPT.-SILENT 1000	AMP MNL	2	561248	561247	
C472	FR SERVICE CPT-SILENT 1000	PED WP	2	561566	561690	
C473	FR SERVICE CPT-SILENT 1000	AMP MNL	3	561667	561550	
C500	FR JCT PANEL-PRODRIVER	MOLEX	6	562070	562069	
C501	RH CONSOLE-PRODRIVER	PED MP	7	562433	-------	
C502	DRIVER GUARD PRE-HTR SW.	SWF	8	-------	561107	
C503	DRIVER GUARD PRE-HTR SW.	SWF	2	-------	561837	
C504	DRIVER GUARD WEBASTO TIMER	AMP FF	8	561188	562363	
C505	DRIVER GUARD ESPAR TIMER	AMP FF	3	-------	562034	
C508	RR JCT BOX-FAN CLUTCH MOD	AMP MNL	6	561552	561515	
CA	FR SERVICE CPT-ECU WORLD TR. T & BET		34	-------	562419	
CB	FR SERVICE CPT-ECU WORLD TR. T & BET		34	-------	562420	

No.	LOCATION	TYPE	(NB) CAVITY	*PIN HOUSING	*SOCKET HOUSING	HOUSING
C3	UNDER DASH-LH	AMP CPC	37	561645	561646	
C7	FR SERVICE COMPT.-CLUTCH SW	ITT SS	3	561111	561080	
C8	FR JCT PANEL VCR FEED	AMP MNL	2	561248	561247	PRIOR REV 010
C11	LH CONSOLE SW-MIRROR	AMP MNL	3	561667	561550	
C12	LH CONSOLE SW-MIRROR HTR	AMP MNL	2	561248	561247	
C13	LH CONSOLE SW-MIRROR	AMP MNL	6	561552	561515	
C14	UNDER DASH LH-MIRROR	AMP MNL	9	561670	561669	
C15	UNDER DASH RH-MIRROR	AMP MNL	9	561670	561669	
C18	UNDER DASH-FIRE ALARM	AMP MNL	2	560900	560898	
C19	UNDER DASH-A/C & HEAT SYST. TC		10	561072	561110	
C20	RR JCT BOX-DIODES	AMP MNL	9	561670	561669	
C21	LUGGAGE COMPT.-LOCK DOOR MOT.-PED		2	--------	562076	
C22	ENGINE COMPT.-CYCLOP LT	PED WP	2	561566	561690	
C26	UNDER INSTRUMENT-PANEL RHEO.TC		2	561030	560997	
C29	FR SERVICE COMPT.-VIM FEED	PED WP	3	561781	561782	
C32	RH CONSOLE-DRV TEMP SENSOR	BURNDY	3	--------	56104	
C33	FRSERVICE COMPT.-DDEC VSS	PED WP	2	561566	561690	
C34	RH CONSOLE-DRV TEMP CTRL	BURNDY	6	--------	56103	
C35	RECIRULATED AIR GRIL-SENSER	BURNDY	3	--------	56104	
C36	LH CONSOLE SW-CRUISE ON/OFF	SWF	8	--------	561107	
C37	LH CONSOLE SW-CRUISE SET	SWF	8	--------	561107	
C38	LH CONSOLE SW-CRUISE RESUME	SWF	8	--------	561107	
C41	UNDER DASH-FLASHER UNIT	TC	2	--------	561945	
C49	LAVATORY NIGHT LTS	AMP MNL	2	560900	560898	
C50	RH CONSOLE-PAS. TEMP. CTRL	BURNDY	6	--------	56103	
C51	RH CONSOLE SW-A/C & HEAT	SWF	8	--------	561107	
C52	ENGINE COMPT.-COMPRESSOR 05G	PED WP	2	561566	561690	
C53	ENGINE COMPT.-COMPRESSOR 05G	PED WP	2	561566	561690	
C54	ENGINE COMPT.-COMPRESSOR 05G	TC	1	560998	560697	
C61	ENGINE COMPT.-FUEL FILTER	PED WP	2	561566	561690	
C67	LH UNDER DASH-AMPLIF. RH SPK	BLAUPUNKT	2	561988	--------	
C68	LH UNDER DASH-AMPLIF. RH SPK	BLAUPUNKT	2	561988	--------	
C73	LH SW. PANEL-MULTIFUNC.LEV.	AMP FF	8	561689	--------	
C74	LH SW. PANEL-MULTIFUNC.LEV.	AMP FF	6	--------	561108	
C78	LUGGAGE COMPT.-DOOR LOCK 4 LH	AMP MNL	4	560851	560852	
C79	LUGGAGE COMPT.-DOOR LOCK 4 RH	AMP MNL	4	560851	560852	
C80	FR JCT PANEL-LUG.DOOR LOCK	AMP MNL	6	561552	561515	
C81	LUGGAGE COMPT.-DOOR LOCK 1 LH	AMP MNL	4	560851	560852	
C82	LUGGAGE COMPT.-DOOR LOCK 1 RH	AMP MNL	4	560851	560852	
C83	UNDER DASH-FLASHER MODULE	TC	10	561072	561110	
C84	UNDER DASH-A/C SYSTEM	TC	3	561091	561071	
C85	LUGGAGE COMPT.-DOOR LOCK 3 RH	AMP MNL	4	560851	560852	
C86	LUGGAGE COMPT.-DOOR LOCK 3 LH	AMP MNL	4	560851	560852	
C88	RR END ROOF-CLEARANCE LTS	AMP MNL	2	560900	560898	
C90	RR ROOF AUX.-A/C THERMOST.	BURNDY	6	--------	56103	
C91	RR ROOF AUX.-A/C TMP SENSOR	BURNDY	6	--------	56104	
C92	RR ROOF AUX.-A/C FAN RH	TC	2	561030	560997	
C93	RR ROOF AUX.-A/C FAN LH	TC	2	561030	560997	
C94	RR ROOF AUX.-A/C FAN RES LH	AMP MNL	2	560900	560898	
C95	RR ROOF AUX.-A/C FAN RES RH	AMP MNL	2	560900	560898	
C96	RR ROOF AUX.-A/C LIQ SOL VAL.	TC	2	561030	560997	
C97	RR ROOF AUX.-A/C SHUT SOL.VAL	AMPHENOL	2	--------	560412	
C98	CONDENSER CPT.	ITT SS	561998	561999		
C101	CONDENSER CPT.-A/C PRESS.SW	PED WP	2	561566	561690	
C105	UNDER DASH RH-DRV LIQ SOL VL	TC	2	561030	560997	
C106	UNDER DASH RH-DRV WTR VALVE	TC	2	561030	560997	
C107	UNDER DASH RH-DRV HTR RH FAN	TC	2	561030	560997	
C108	UNDER DASH RH-DRV HTR LH FAN	TC	2	561030	560997	

No.	LOCATION	TYPE	(NB) CAVITY	*PIN HOUSING	*SOCKET HOUSING	HOUSING
C111	LH CONSOLE SW-DRIVER'L TS	SWF	8	--------	561107	
C112	LH CONSOLE SW-GENERAL LTS	SWF	8	--------	561107	
C114	ENGINE DDEC-SPEED SIGNAL	PED WP	2	561566	561590	
C115	RR JCT BOX-ENGINE ACCES.	DEUTSCH	40	562281	562284	
C116	DRIVE AXLE COMPT.-AIR DRYER	PED MP	2	--------	562251	
C119	ENGINE COMPT.-LH LOWER LAMP	PED WP	6	561606	561607	
C120	ENGINE COMPT.-LH LOWER LAMP	PED WP	6	561606	561607	
C123	HAT RACK-BALLAST RH	AMP MNL	6	561552	561515	
C123	HAT RACK-BALLAST RH	AMP MNL	6	561552	561515	
C124	HAT RACK-FLUORESCENT	AMP MNL	4	561551	561668	
C125	HAT RACK-FLUORESCENT	AMP MNL	4	561551	561668	
C126	HAT RACK-REC.LTS	AMP MNL	2	560900	560898	
C130	LH CONSOLE SW-READING LTS	SWF	8	--------	561107	
C131	LH CONSOLE SW-LUG.DOOR LOCK	SWF	8	--------	561107	
C132	LH CONSOLE SW-PAS & HOS CHME	SWF	8	--------	561107	
C133	LH CONSOLE SW-JACOB OR RET.	SWF	8	--------	561107	
C134	LH CONSOLE SW-GALLEY	SWF	8	--------	561107	
C135	LH SW. PANEL-ETHER	SWF	8	--------	561107	
C136	LH CONSOLE SW-MIRROR HTR	SWF	8	--------	561107	
C137	RH SW PANEL-HEAD LAMP	SWF	8	--------	561107	
C138	RH SW PANEL-SPARE	SWF	8	--------	561107	
C139	RH SW PANEL-FGG LAMP	SWF	8	--------	561107	
C140	FR JCT PANEL-BAT.HI.LO	AMP MNL	2	560900	560898	
C141	ENGINE COMPT.-B-UP ALARM	PED WP	2	561566	561690	
C142	FR SERVICE CPT-LH MARKER LTS	ITT SS	3	561111	561080	
C143	FR LH HAT RACK-FEEDING	AMP MNL	2	561248	561247	
C144	RR RH HAT RACK-FEEDING	AMP MNL	9	561661	561662	
C145	RH HAT RACK-BALLAST	AMP MNL	4	560851	560852	
C146	FR SERVICE DASH PANEL-TACHOGRAPH	ITT SS	3	561111	561080	
C147	RR ROOF LH-EMERGENCY EXIT LTS	AMP MNL	2	560900	560898	
C148	RR ROOF RH-EMERGENCY EXIT LTS	AMP MNL	2	560900	560898	
C149	LH HAT RACK-BALLAST	AMP MNL	4	560851	560852	
C150	FR RH HAT RACK-110V FLUOR	AMP MNL	2	561248	561247	
C153	FR LH HAT RACK-110V FLUOR	AMP MNL	2	561248	561247	
C152	LH HAT RACK-GENERAL LTS	AMP MNL	3	561667	561550	
C153	LH HAT RACK-GENERAL LTS	AMP MNL	3	561667	561550	
C154	RH SW PANEL-HAZARD	SWF	8	--------	561107	
C155	LH SW PANEL-FAST IDLE	SWF	8	--------	561107	
C156	LH SW PANEL-STOP ENG.OVER.	SWF	8	--------	561107	
C158	RR ROOF AUX. A/C FEEDING	AMP MNL	3	561667	561550	
C159	RR ROOF CPT-INTERFACE	AMP CPC	37	561644	561646	
C161	ENGINE DDEC III-ECM	PED	30	--------	561600	
C162	ENGINE DDEC III-ACCESSORIES	PED WP	4	561610	561611	
C163	ENGINE CPT-COOLANT PROBE	PED WP	2	--------	562350	
C164	FR SERVICE JCT BOX	AMP CPC	22	561709	561710	
C165	FR SERVICE JCT BOX	AMP CPC	16	561693	561695	
C166	UNDER INSTRUMENT PANEL	AMP CPC	16	561639	561640	
C167	FR SERVICE CPT-EL.FOOT PEDAL	PED WP	3	561781	561782	
C168	FR SERVICE CPT-DDR	DEUTSCH	6	562360	--------	
C169	FR SERVICE CPT-WORLD TR. VIM	AMP CPC	16	561638	561640	
C172	ENGINE COMPT-WATER TANK HEAT	AMP FF	2	561566	561690	
C173	LAV.PORTABLE-WATER TANK HEAT	AMP MNL	2	560900	560898	
C175	FR SERV CPT-WHEELING FEEDING	PED WP	3	561781	561782	
C177	GALLEY-REFRIGERATOR	AMP MNL	2	561248	561247	

No.	LOCATION	TYPE	(NB) CAVITY	*PIN HOUSING	*SOCKET HOUSING	HOUSING
C179	RH HAT RACK-110V MONITOR	MOLEX	4	561477	561476	PRIOR REV. 010
C180	FR SERV CPT-KNEEL DIODE	AMP MNL	9	561670	561669	
C181	FR SERV CPT-WHEELING MODULE	AMP MNL	12	561735,	561734	
C182	FR SERVICE CPT-SPEED SW	AMP HDP	15	--------	562012	
C184	FR SERV CPT-KNEEL MOD. CTRL	AMP MNL	3	--------	561550	
C184	FR AXLE-KNEELING PRO/INST	SW AMP MNL	3	561667	561550	
C185	FR SERVICE JCT-KNEEL MOD.EXH.	AMP MNL	3	--------	561550	
C187	FR SERV CPT-KNEEL MOD.BRK	AMP MNL	3	--------	561550	
C187	FR SERVICE JCT BOX-RESISTORS	AMP MNL	6	561552	561515	
C188	LH CONSOLE SW-KNEELING	SWF	8	--------	561107	
C190	FR SERVICE CPT.-WORLD TP VIM	PED WP	30	--------	561600	
C192	GALLEY-FEEDING	AMP CPC	3	561862	561847	
C194	GALLEY SW-CONTAINER RH	SWF	8	--------	561107	
C195	GALLEY SW-CONTAINER LH	SWF	8	--------	561107	
C199	FR SERV. JCT BOX-SERVICE BRK	AMP MNL	3	561667	561550	
C200	LH CONSOLE SW-24V FLUOR	SWF	8	--------	561107	
C201	UNDER INSTRUMENT PANEL	AMP MNL	2	560900	560898	PRIOR REV. 010
C202	UNDER INSTRUMENT PANEL	AMP CPC	9	561636	561637	
C205	LH UNDER DASH-AMPLIF. LH SPK	BLAUPUNKT	2	561988	--------	
C206	RH CONSOLE-FR DEFROSTER	TC	2	561030	560997	
C207	RH CONSOLE-DRV RHEOSTAT	AMP MNL	6	561552	561515	
C208	UNDER DASH-DRV HTR MODULE	AMP MNL	9	561670	561669	
C209	UNDER DASH-DRV HTR MODULE	AMP MNL	9	561670	561669	
C214	LH UNDER DASH-AMPLIF. LH SPK	BLAUPUNKT	2	561988	--------	
C211	FR CONSOLE-VCR VIDEO	AMP MNL	4	561551	561668	PRIOR REV. 010
C212	LH CONSOLE SW-VCR VIDEO	SWF	8	--------	561107	PRIOR REV. 010
C213	FR ROOF-CLEARANCE LT	AMP MNL	2	560900	560898	
C214	FR JCT PANEL-TACHOGRAPH	V.D.O.	8	--------	561080	
C215	UNDER DASH PANEL-TACHOGRAPH	V.D.O.	8	--------	562043	
C216	UNDER DASH PANEL-TACHOGRAPH	AMP MNL	4	560851	560852	
C217	FR LH HAT RACK-SPEAKER	AMP MNL	4	561659	561660	
C218	FR RH HAT RACK-SPEAKER	AMP MNL	4	561659	561660	
C219	FR HAT RACK-110V PLUS-DEL.	MOLEX	4	561477	561476	PRIOR REV. 010
C220	LH UNDER DASH-P.A. VOLUME	AMP MNL	3	561667	561550	PRIOR REV. 010
C221	LH UNDER DASH-AMPLIFIER FEED	AMP MNL	3	561667	561550	PRIOR REV. 010
C222	LH UNDER DASH-P.A RADIO	AMP MNL	9	561670	561669	PRIOR REV. 010
C223	LH UNDER DASH-P.A RADIO	AMP MNL	9	561670	561669	PRIOR REV. 010
C224	LH UNDER DASH-PA & RADIO FEED	AMP MNL	6	561552	561515	PRIOR REV. 010
C225	LH UNDER DASH-PA MICRO OUTLET	AMP MNL	3	561667	561550	PRIOR REV. 010
C226	LH UNDER DASH-PA MICRO OUTLET	AMP MNL	3	561667	561550	PRIOR REV. 010
C227	RH CONSOLE-SPEAKER CONTROL	SW SWF	8	--------	561107	PRIOR REV. 010
C229	LH UNDER DASH-PA DRV SPEAKERS	AMP MNL	4	561551	561668	PRIOR REV. 010
C230	FR SERVICE CPT-PUMP SW.	PED WP	2	561566	561690	
C231	ENG.CPT.-FUEL PRIME PUMP	PED WP	2	561566	561690	
C232	UNDER L.H. CONSOLE	MOLEX	4	561477	561476	PRIOR REV. 010
C233	MICRO OUTLET SOCKET	MOLEX	4	561477	561476	PRIOR REV. 010
C234	UNDER INSTRUMENT PANEL-VDO	AMP MNL	4	560851	560852	PRIOR REV. 010
C234	UNDER INSTRUMENT PANEL-VDO	AMP FF	8	--------	562363	
C235	UNDER INSTRUMENT PANEL-VDO	AMP MNL	4	560851	560852	PRIOR REV. 010
C236	UNDER INSTRUMENT PANEL-VDO	AMP FF	2	561566	561690	
C236	FR SERVICE CPT CENTER-ABS	AMP CPC	14	561585	561583	
C237	FR AXLE CPT-ABS RH SENSOR	WABCO	2	641132	--------	
C238	FR AXLE CPT-ABS RH VALVE	WABCO	3	--------	641098	
C239	FR AXLE CPT-ABS LH VALVE	WABCO	3	--------	641098	
C240	FR AXLE CPT-ABS LH SENSOR	WABCO	2	641132	--------	
C241	DRIVE AXLE CPT-ABS	PED WP	6	561606	561607	
C242	DRIVE AXLE CPT-ABS LH SENSOR	DEUTSCH	2	562486	562485	

No.	LOCATION	TYPE	(NB) CAVITY	*PIN HOUSING	*SOCKET HOUSING	HOUSING
C243	DRIVE AXLE CPT-ABS LH VALVE	WABCO	3	--------	641098	
C244	DRIVE AXLE CPT-ABS RH VALVE	WABCO	3	--------	641098	
C245	DRIVE AXLE CPT-ABS RH SENSOR	WABCO	2	641132	--------	PRIOR S570
C245	DRIVE AXLE CPT-ABS RH SENSOR	DEUTSCH	2	562486	562485	EFF. W/S570
C246	DRIVE AXLE CPT-ABS SPARE	PED WP	4	561610	561611	
C247	FR SERVICE CPT-ABS MODULE	WABCO	35	--------	561094	
C248	DRIVE AXLE CPT-ABS	PED WP	6	561606	561607	
C249	FR SERVICE CPT-ABS/DDEC	PED WP	2	561566	561690	
C250	RH SW PANEL-B/UP CANCEL	SWF	8	--------	561107	
C251	RH SW PANEL-SEAT HTR	SWF	8	--------	561107	
C252	LH SW PANEL-SWITCH LT	SWF	2	--------	561837	
C254	FR SERVICE JCT BOX-ABS	AMP CPC	16	561693	561695	
C255	RH CONSOLE-RADIO	AMP MNL	9	561670	561669	PRIOR REV 010
C257	ENGINE COMPT-WATER HEATER	AMP FF	6	--------	561186	
C258	DRIVER GUARD WATER HTR TIMER	AMP FF	8	561188	562363	
C259	ENGINE COMPT-WATER HEATER	TC	2	561597	--------	
C260	ENGINE COMPT-WATER HEATER	TC	1	561073	--------	
C261	ENGINE COMPT-WATER HEATER	TC	2	561597	--------	
C266	BATTERY COMPT.-LTS	AMP MNL	2	561248	561247	
C267	LUGGAGE COMPT.-LTS - 1	AMP MNL	2	561248	561247	
C268	LUGGAGE COMPT.-LTS - 2	AMP MNL	2	561248	561247	
C269	LUGGAGE COMPT.-LTS - 3 PH	AMP MNL	2	561248	561247	
C270	LUGGAGE COMPT.-LTS - 3 LH	AMP MNL	2	561248	561247	
C271	LUGGAGE COMPT.-LTS - 4	AMP MNL	2	561248	561247	
C272	FR SERVICE CPT-LTS	AMP MNL	2	561248	561247	
C274	FR JCT PANEL-DIODES	AMP MNL	15	561987	561986	
C276	FR JCT PANEL-ALARM BUZZER	BOSCH	5	--------	561183	
C290	LUGGAGE CPT-DOOR LOCK	AMP MNL	4	560851	560852	
C291	LUGGAGE CPT-DOOR LOCK	AMP MNL	4	560851	560852	
C292	LUGGAGE CPT-DOOR LOCK	AMP MNL	4	560851	560852	
C293	WIPER MOTOR	AMP FF	6	--------	561186	
C294	UNDER DASH-WIPER SYST.FEED	AMP MNL	6	561552	561515	
C295	UNDER DASH-WIPER SYST.DEL.	AMP FF	6	--------	561186	
C296	FR SERVICE CPT-HEAD LTS	ITT SS	3	561111	561080	
C297	FR LH HAT RACK-AMPLIF.	MOLEX	6	--------	562465	PRIOR REV 010
C299	FR LH HAT RACK-AMPLI	MOLEX	10	--------	562465	PRIOR REV 010
C300	FR LH HAT RACK-AMPLI	MOLEX	6	--------	562464	PRIOR REV 010
C301	FR LH HAT RACK-AMPLI	MOLEX	10	--------	562465	PRIOR REV 010
C302	UNDER DASH-FLASHER MODULE	AMP MNL	2	560900	560898	
C309	ENGINE DDEC III-ECM POWER	PED WP	5	--------	562345	
C312	ENGINE DDEC III-ECM SIGNAL	PED WP	3	561781	561782	
C313	ENGINE DDEC III-OUTPUT	PED WP	4	562398	--------	
C314	FR SERVICE CPT-PRESS SW KNEEL	PED WP	2	561566	561690	
C315	FR SERVICE CPT-KNEEL ALARM	PED WP	2	561566	561690	
C316	FR SERVICE CPT-KNEEL ALARM	AMP MNL	2	560900	560898	
C326	ENGINE DDEC III- MANUAL TR.	PED WP	4	561610	561611	
C364	FR ROOF-DESTINATION SIGN	AMP MNL	3	561667	561550	
C365	FR ROOF-DESTINATION SIGN	AMP MNL	2	560900	560898	
C368	FR ROOF-DEST. SIGN BALLAST	AMP MNL	3	561667	561550	
C369	FR ROOF-DEST. SIGN OPER SW.	TORRO	2	--------	562110	
C370	FR ROOF-DEST. SIGN FLUOR.	AMP MNL	2	560900	560898	
C371	FR ROOF-DEST. SIGN SPEED SW.	MOLEX	4	561477	561476	
C372	FR ROOF-DEST. SIGN SPEED SW.	MOLEX	4	561477	561476	

No.	LOCATION	TYPE	(NB) CAVITY	*PIN HOUSING	*SOCKET HOUSING	HOUSING
C382	ENGINE GENERATOR 12 VOLT REG	PED WP	1	561605	561577	
C383	LH UNDER DASH-MICRO W/O WIRE	AMP MNL	2	561248	561247	PRIOR REV. 010
C384	LH UNDER DASH-MICRO W/O WIRE	AMP MNL	3	561550	561667	PRIOR REV. 010
C385	BATTERY COMPT. ACC.	AMP MNL	12	561735	561734	
C386	CONDENSER CPT-BYPASS VALVE	PED WP	2	561566	561590	
C387	EVAPORATOR CPT-BYPASS VALVE	PED WP	2	561566	561590	
C388	LH SW.PANEL-MASTER SW.	SWF	8	--------	561107	
C389	EVAPORATOR CPT-WATER PUMP	PED WP	2	561566	561590	
C390	CONDENSER CPT.-A/C JCT BOX	DEUTSCH	24	562280	562283	
C391	CONDENSER CPT-PRESS.SW	PED WP	2	561566	561590	
C392	CONDENSER CPT-MOTOR FAN	PED WP	2	561566	561590	
C393	CONDENSER CPT.-MOTOR FAN	PED WP	2	561566	561590	
C394	LH OVER CONSOLE- B/U MONITOR	AMP MNL	4	560851	560852	
C395	LH OVER CONSOLE- B/U MONITOR	AMP MNL	5	--------	--------	
C396	CONDENSER CPT.-MOTOR FAN	PED WP	2	561566	561590	
C396	HAT RACK SPEAKER	MOLEX	6	--------	562507	562503
C397	CONDENSER CPT.-MOTOR FAN	PED WP	2	561566	561590	
C426	ENGINE 560 PAD.FAN CLUTCH	PED WP	3	561781	561782	
C430	DRIVER GUARD WATER HTR TIMER	AMP FF	8	561188	562363	
C450	SOUND SYS.-JCT.PANEL	MOLEX	4	562507	562503	
C451	WIRELESS MICRO-FIRST CPT BAG	MOLEX	2	562550	562549	
C452	UNDER DASH INSTR.PANEL	MOLEX	2	562550	562549	
C453	SOUND SYS.-JCT.PANEL-VCP	PED WP	2	561566	561590	
C454	SOUND SYS.JCT.PANEL-FILT.VCP	PED WP	2	561566	561590	
C455	WIRELESS MICRO-LH HAT-RACK	MOLEX	2	562554	562551	
C456	WORLD TRANSM.-RETARDER ACCUM.	PED MP	2	--------	562427	
C457	WORLD TRANSM.-MAIN CONNECTOR	DEUTSCH	31	562572	562536	
C458	WORLD TRANSM.-RETARDER SENS	PED MP	2	--------	562426	
C459	WORLD TRANSM.-ENGINE SP.SENS.	PED MP	2	--------	562426	
C460	WORLD TRANSM.-SPEED SENSOR	PED MP	2	--------	562541	
C461	WORLD TRANSM.-RETARDER TEMP.	PED MP	2	561566	561590	
C462	WORLD TRANSM.-RETARD SOL."X"	PED MP	2	--------	562426	
C463	WORLD TRANSM.-SOLR CONN.	DEUTSCH	16	562570	562571	
C464	FR SERVICE CPT.-DDL CONN. W.T.	PED MP	12	--------	562574	
C465	LH CONSOLE-DRIVER SELECTOR	T.A. BET	10	--------	562429	
C466	FR SERVICE CPT.-PRESS. MOD.	PED WP	3	--------	562428	
C467	FR SERVICE CPT.-PRESS. MOD.	PED WP	3	--------	562428	
C468	FR SERVICE CPT.-VIM MOD.W.T.	PED MP	18	--------	562573	
C470	FR SERVICE CPT.-SILENT 1000	AMP MNL	2	561248	561247	
C471	FR SERVICE CPT.-SILENT 1000	AMP MNL	2	561248	561247	
C472	FR SERVICE CPT.-SILENT 1000	PED WP	2	561566	561690	
C473	FR SERVICE CPT.-SILENT 1000	AMP MNL	3	561667	561550	
C474	FR SERVICE CPT-SPEED SIGN CONN	DEUTSCH	6	--------	562581	
C475M	FR SERVICE CPT-SPEED SIGN M.T.	DEUTSCH	6	562583	--------	
C475W	FR SERVICE CPT-SPEED SIGN W.T	DEUTSCH	6	562583	--------	
C500	FR JCT PANEL-PRODRIVER	MOLEX	6	562070	562069	
C501	RH CONSOLE-PRODRIVER	PED MP	7	562433	--------	
C502	DRIVER GUARD PRE-HTR SW.	SWF	8	--------	561107	
C503	DRIVER GUARD PRE-HTR SW.	SWF	2	--------	561837	
C504	DRIVER GUARD WEBASTO	AMP FF	8	561188	562363	
C505	DRIVER GUARD ESPAR TIMER	AMP FF	3	--------	562034	
C508	RR JCT BOX-FAN CLUTCH MOD	AMP MNL	6	561552	561515	
C4	FR SERVICE CPT-ECU WORLD TP.	T & BET	34	--------	562419	
C8	FR SERVICE CPT-ECU WORLD TP.	T & BET	34	--------	562420	

NO.	LOCATION	TYPE	(NB) CAVITY	*PIN HOUSING	*SOCKET HOUSING
C3	UNDER DASH-LH	AMP CPC	37	561645	561646
C7	FR SERVICE COMPT.-CLUTCH SW	ITT SS	3	561111	561080
C8	FR JCT PANEL VCR FEED	AMP MNL	2	561248	561247 PRIOR REV 010
C11	LH CONSOLE SW-MIRROR	AMP MNL	3	561667	561550
C12	LH CONSOLE SW-MIRROR HTR	AMP MNL	2	561248	561247
C13	LH CONSOLE SW-MIRROR	AMP MNL	6	561552	561515
C14	UNDER DASH LH-MIRROR	AMP MNL	9	561670	561669
C15	UNDER DASH RH-MIRROR	AMP MNL	9	561670	561669
C18	UNDER DASH-FIRE ALARM	AMP MNL	2	560900	560898
C19	UNDER DASH-A/C & HEAT SYST.	TC	10	561072	561110
C20	RR JCT BOX DIODES	AMP MNL	9	561670	561669
C21	LUGGAGE COMPT.-LOCK DOOR MOT.	PED	2	------	562076
C22	ENGINE COMPT.-CYCLOP LT	PED WP	2	561566	561690
C26	UNDER INSTRUMENT.-PANEL RHEO.	TC	2	561030	560997
C29	FR SERVICE COMPT.-VIM FEED	PED WP	3	561781	561782
C32	RH CONSOLE-DRV TEMP SENSOR	BURNDY	3	------	561104
C33	FRSERVICE COMPT. DDEC VSS	PED WP	2	561566	561690
C34	RH CONSOLE-DRV TEMP CTRL	BURNDY	6	------	561103
C35	RECIRULATED AIR GRIL.-SENSER	BURNDY	3	------	561104
C36	LH CONSOLE SW-CRUISE ON/OFF	SWF	8	------	561107
C37	LH CONSOLE SW-CRUISE SET	SWF	8	------	561107
C38	LH CONSOLE SW-CRUISE RESUME	SWF	8	------	561107
C41	UNDER DASH-FLASHER UNIT	TC	2	------	561940
C49	LAVATORY NIGHT LTS	AMP MNL	2	560900	560898
C50	RH CONSOLE-PAS. TEMP CTRL	BURNDY	6	------	561103
C51	RH CONSOLE SW-A/C & HEAT	SWF	8	------	561107
C52	ENGINE COMPT.-COMPRESSOR 05G	PED WP	2	561566	561690
C53	ENGINE COMPT.-COMPRESSOR 05G	PED WP	2	561566	561690
C54	ENGINE COMPT.-COMPRESSOR 05G	TC	1	560098	560697
C61	ENGINE COMPT.-FUEL FILTER	PED WP	2	561566	561690
C65	UNDER LH HAT RACK	MOLEX	4	561477	561476
C67	LH UNDER DASH-AMPLIF. RH SPK	BLAUPUNKT	2	561988	------
C68	LH UNDER DASH-AMPLIF. RH SPK	BLAUPUNKT	2	561988	------
C73	LH SW PANEL-MULTI FUNC. LEV.	AMP FF	8	561188	------
C74	LH SW PANEL-MULTI FUNC. LEV.	AMP FF	6	------	561108
C78	LUGGAGE COMPT.-DOOR LOCK 4 LH	AMP MNL	4	560851	560852
C79	LUGGAGE COMPT.-DOOR LOCK 4 RH	AMP MNL	4	560851	560852
C80	FR JCT PANEL-LUG. DOOR LOCK	AMP MNL	6	561552	561515
C81	LUGGAGE COMPT.-DOOR LOCK 1 LH	AMP MNL	4	560851	560852
C82	LUGGAGE COMPT.-DOOR LOCK 1 RH	AMP MNL	4	560851	560852
C83	UNDER DASH-FLASHER MODULE	TC	10	561072	561110
C84	UNDER DASH-A/C SYSTEM	TC	3	561091	561071
C85	LUGGAGE COMPT.-DOOR LOCK 3 RH	AMP MNL	4	560851	560852
C86	LUGGAGE COMPT.-DOOR LOCK 3 LH	AMP MNL	4	560851	560852
C88	RR END ROOF-CLEARANCE LTS	AMP MNL	2	560900	560898
C90	RR ROOF AUX. A/C THERMOST.	BURNDY	6	------	561103
C91	RR ROOF AUX. A/C TMP SENSOR	BURNDY	6	------	561104
C92	RR ROOF AUX. A/C FAN RH	TC	2	561030	560997
C93	RR ROOF AUX. A/C FAN LH	TC	2	561030	560997
C94	RR ROOF AUX. A/C FAN RES LH	AMP MNL	2	560900	560898
C95	RR ROOF AUX. A/C FAN RES RH	AMP MNL	2	560900	560898
C96	RR ROOF AUX. A/C LIQ SOL VAL	TC	2	561030	560997
C97	RR ROOF AUX. A/C SHUT SOL VAL	AMPHENOL	2	------	560412
C98	CONDENSER CPT.	ITT SS	4	561998	561999
C101	CONDENSER CPT.-A/C PRESS. SW	PED WP	2	561566	561690
C105	UNDER DASH RH-DRV LIQ SOL VL	TC	2	561030	560997
C106	UNDER DASH RH-DRV WTR VALVE	TC	2	561030	560997
C107	UNDER DASH RH-DRV HTR RH FAN	TC	2	561030	560997
C108	UNDER DASH RH-DRV HTR LH FAN	TC	2	561030	560997

CONNECTORS CODE (C) PAGE G : 1

NO.	LOCATION	TYPE	(NB) CAVITY	*PIN HOUSING	*SOCKET HOUSING
C111	LH CONSOLE SW-DRIVER'LTS	SWF	8	------	561107
C112	LH CONSOLE SW-GENERAL LTS	SWF	8	------	561107
C114	ENGINE DDEC-SPEED SIGNAL	PED WP	2	561566	561590
C115	RR JCT BOX-ENGINE ACCES.	DEUTSCH	40	562281	562284
C116	DRIVE AXLE COMPT.-AIR DRYER	PED MP	2	------	562251
C119	ENGINE COMPT.-LH LOWER LAMP	PED WP	6	561606	561607
C120	ENGINE COMPT.-LH LOWER LAMP	PED WP	6	561606	561607
C123	HAT RACK-BALLAST RH	AMP MNL	6	561552	561515
C123	HAT RACK-BALLAST RH	AMP MNL	6	561552	561515
C124	HAT RACK-FLUORESCENT	AMP MNL	4	561551	561668
C125	HAT RACK-FLUORESCENT	AMP MNL	4	561551	561668
C126	HAT RACK-READING LTS	AMP MNL	2	560900	560898
C130	LH CONSOLE SW-READING LTS	SWF	8	------	561107
C131	LH CONSOLE SW-LUG.DOOR LOCK	SWF	8	------	561107
C132	LH CONSOLE SW-PAS & HOS CHIME	SWF	8	------	561107
C133	LH CONSOLE SW-JACOB OR RET.	SWF	8	------	561107
C134	LH CONSOLE SW-GALLEY	SWF	8	------	561107
C135	LH SW PANEL-ETHER	SWF	8	------	561107
C136	LH CONSOLE SW-MIRROR HTR	SWF	8	------	561107
C137	RH SW PANEL-HEAD LAMP	SWF	8	------	561107
C138	RH SW PANEL-SPARE	SWF	8	------	561107
C139	RH SW PANEL-FOG LAMP	SWF	8	------	561107
C140	FR JCT PANEL-BAT. HI/LO	AMP MNL	2	560900	560898
C141	ENGINE COMPT.-B/UP ALARM	PED WP	2	561566	561590
C142	FR SERVICE CPT-LH MARKER LTS	ITT SS	3	561111	561080
C143	RR LH HAT RACK-FEEDING	AMP MNL	9	561661	561662
C144	RR RH HAT RACK-FEEDING	AMP MNL	9	561661	561662
C145	RH HAT RACK-BALLAST	AMP MNL	4	560851	560852
C146	FR SERVICE CPT-RH MARKER LTS	ITT SS	3	561111	561080
C147	RR ROOF LH-EMERGENCY EXIT LTS	AMP MNL	2	560900	560898
C148	RR ROOF RH-EMERGENCY EXIT LTS	AMP MNL	2	560900	560898
C149	LH HAT RACK-BALLAST	AMP MNL	4	560851	560852
C150	FR RH HAT RACK-110V FLUOR	AMP MNL	2	561248	561247
C151	FR LH HAT RACK-110V FLUOR	AMP MNL	2	561248	561247
C152	LH HAT RACK-GENERAL LTS	AMP MNL	3	561667	561550
C153	RH HAT RACK-GENERAL LTS	AMP MNL	3	561667	561550
C154	RH SW PANEL-HAZARD	SWF	8	------	561107
C155	LH SW PANEL-FAST IDLE	SWF	8	------	561107
C156	LH SW PANEL-STP ENG. OVER.	SWF	8	------	561107
C158	RR ROOF AUX. A/C FEEDING	AMP MNL	3	561667	561550
C160	FR SERVICE CPT-INTERFACE	AMP CPC	37	561644	561646
C161	ENGINE DDEC III-ECM	PED	30	------	561600
C162	ENGINE DDEC III-ACCESSORIES	PED WP	4	561610	561611
C163	ENGINE CPT-COOLANT PROBE	PED MP	2	------	562350
C164	FR SERVICE JCT BOX	AMP CPC	22	561709	561710
C165	FR SERVICE JCT BOX	AMP CPC	16	561693	561695
C166	UNDER INSTRUMENT PANEL	AMP CPC	16	561639	561640
C167	FR SERVICE CPT-EL. FOOT PEDAL	PED WP	3	561781	561782
C168	FR SERVICE CPT-DDR	DEUTSCH	6	562360	------
C169	FR SERVICE CPT-WORLD TR. VIW	AMP CPC	16	561638	561640
C172	ENGINE COMPT-WATER TANK HEAT.	PED WP	2	561566	561690
C173	LAV.PORTABLE-WATER TANK HEAT.	AMP MNL	2	560900	560898
C175	FR SERV CPT-KNEELING FEEDING	PED WP	3	561781	561782
C177	GALLEY-REFRIGERATOR	AMP MNL	2	561248	561247

NO.	LOCATION	TYPE	(NB) CAVITY	*PIN HOUSING	*SOCKET HOUSING	
C179	RH HAT RACK-110V MONITOR	MOLEX	4	561477	561476	PRIOR REV. 010
C180	FR SERV CPT-KNEEL. DIODE	AMP MNL	9	561670	561699	
C181	FR SERV CPT-KNEELING MODULE	AMP MNL	12	561735	561734	
C182	FR SERVICE CPT-SPEED SW	AMP HDP	15	------	562012	
C184	FR SERV CPT-KNEEL. MOD. CTRL	AMP MNL	3	------	561550	
C184	FR AXLE-KNEELING PROXIMITY SW	AMP MNL	3	561667	561550	
C185	FR SERV CPT-KNEEL. MOD. EXH.	AMP MNL	3	------	561550	
C187	FR SERV CPT-KNEEL. MOD. BRK	AMP MNL	3	------	561550	
C187	FR SERVICE JCT BOX-RESISTORS	AMP MNL	6	561552	561515	
C188	LH CONSOLE SW-KNEELING	SWF	8	------	561107	
C190	FR SERVICE CPT.-WORLD TR VIM	PED WP	30	------	561600	
C192	GALLEY-FEEDING	AMP CPC	3	561862	561847	
C194	GALLEY SW-CONTAINER RH	SWF	8	------	561107	
C195	GALLEY SW-CONTAINER LH	SWF	8	------	561107	
C199	FR SERV. JCT BOX-SERVICE BRK	AMP MNL	3	561667	561550	
C200	LH CONSOLE SW-24V FLUOR	SWF	8	------	561107	
C201	UNDER INSTRUMENT PANEL	AMP MNL	2	560900	560898	PRIOR REV. 010
C202	UNDER INSTRUMENT PANEL	AMP CPC	9	561636	561637	
C205	LH UNDER DASH-AMPLIF. LH SPK	BLAUPUNKT	2	561988	------	
C206	RH CONSOLE-FR DEFROSTER	TC	2	561030	560997	
C207	RH CONSOLE-DRV RHEOSTAT	AMP MNL	6	561552	561515	
C208	UNDER DASH-DRV HTR MODULE	AMP MNL	9	561670	561669	
C209	UNDER DASH-DRV HTR MODULE	AMP MNL	9	561670	561669	
C210	LH UNDER DASH-AMPLIF. LH SPK	BLAUPUNKT	2	561988	------	
C211	RH CONSOLE-VCR VOLUME	AMP MNL	4	561551	561668	PRIOR REV. 010
C212	LH CONSOLE SW-VCR VIDEO	SWF	8	------	561107	PRIOR REV. 010
C213	FR ROOF-CLEARANCE LT	AMP MNL	2	560900	560898	
C214	UNDER DASH PANEL-TACHOGRAPH	V.D.O.	8	------	562041	
C215	UNDER DASH PANEL-TACHOGRAPH	V.D.O.	8	------	562043	
C216	UNDER DASH PANEL-TACHOGRAPH	AMP MNL	4	560851	560852	
C217	FR LH HAT RACK-SPEAKER	AMP MNL	4	561659	561660	
C218	FR RH HAT RACK-SPEAKER	AMP MNL	4	561659	561660	
C219	DASH RHEOSTAT-P.A. VOLUME	MOLEX	4	561477	561476	PRIOR REV. 010
C220	LH UNDER DASH-P.A. VOLUME	AMP MNL	3	561667	561550	PRIOR REV. 010
C221	LH UNDER DASH-AMPLIFIER FEED	AMP MNL	3	561550	561667	PRIOR REV. 010
C222	LH UNDER DASH-P.A. RADIO	AMP MNL	9	561670	561669	PRIOR REV. 010
C223	LH UNDER DASH-P.A. RADIO	AMP MNL	9	561670	561669	PRIOR REV. 010
C224	LH UNDER DASH-PA & RADIO FEED	AMP MNL	6	561552	561515	PRIOR REV. 010
C225	LH UNDER DASH-PA MICRO OUTLET	AMP MNL	3	561667	561550	PRIOR REV. 010
C226	LH UNDER DASH-PA MICRO OUTLET	AMP MNL	3	561667	561550	PRIOR REV. 010
C227	RH CONSOLE-SPEAKER CONTROL SW	SWF	8	------	561107	PRIOR REV. 010
C229	LH UNDER DASH-PA DRV SPEAKERS	AMP MNL	4	561551	561668	PRIOR REV. 010
C230	ENG.CPT.-FUEL PRIME PUMP SW.	PED WP	2	561566	561690	
C231	ENG.CPT.-FUEL PRIME PUMP	PED WP	2	561566	561690	
C232	UNDER L.H. CONSOLE	MOLEX	4	561477	561476	PRIOR REV. 010
C233	MICRO OUTLET SOCKET	MOLEX	4	561477	561476	PRIOR REV. 010
C234	UNDER INSTRUMENT PANEL-VDO	AMP MNL	4	560851	560852	PRIOR REV. 010
C234	UNDER INSTRUMENT PANEL-VDO	AMP FF	8	------	562363	
C235	UNDER INSTRUMENT PANEL-VDO	AMP MNL	4	560851	560852	PRIOR REV. 010
C235	UNDER INSTRUMENT PANEL-VDO	AMP FF	8	------	562363	
C236	FR SERVICE CPT CENTER-ABS	AMP CPC	14	561585	561583	
C237	FR AXLE CPT-ABS RH SENSOR	WABCO	2	641132	------	
C238	FR AXLE CPT-ABS RH VALVE	WABCO	3	------	641098	
C239	FR AXLE CPT-ABS LH VALVE	WABCO	3	------	641098	
C240	FR AXLE CPT-ABS LH SENSOR	WABCO	2	641132	------	
C241	DRIVE AXLE CPT-ABS	PED WP	6	561606	561607	
C242	DRIVE AXLE CPT-ABS LH SENSOR	DEUTSCH	2	562486	562485	

CONNECTORS CODE (C) PAGE G : 2

NO.	LOCATION	TYPE	(NB) CAVITY	*PIN HOUSING	*SOCKET HOUSING	
C243	DRIVE AXLE CPT-ABS LH VALVE	WABCO	3	------	641098	
C244	DRIVE AXLE CPT-ABS RH VALVE	WABCO	3	------	641098	
C245	DRIVE AXLE CPT-ABS RH SENSOR	WABCO	2	641132	------	PROIR S570
C245	DRIVE AXLE CPT-ABS RH SENSOR	DEUTSCH	2	562486	562485	EFF. W/S570
C246	DRIVE AXLE CPT-ABS SPARE	PED WP	4	561610	561611	
C247	FR SERVICE CPT-ABS MODULE	WABCO	35	------	561094	
C248	DRIVE AXLE CPT-ABS	PED WP	6	561606	561607	
C249	FR SERVICE CPT-ABS/DDEC	PED WP	2	561566	561690	
C250	RH SW PANEL-B/UP CANCEL	SWF	8	------	561107	
C251	RH SW PANEL-SEAT HTR	SWF	8	------	561107	
C252	LH SW PANEL-SWITCH LT	SWF	2	------	561837	
C254	FR SERVICE JCT BOX-ABS	AMP CPC	16	561693	561695	
C255	RH CONSOLE-RADIO	AMP MNL	9	561670	561669	PRIOR REV 010
C257	ENGINE COMPT-WATER HEATER	AMP FF	6	------	561186	
C258	DRIVER GUARD WATER HTR TIMER	AMP FF	8	561188	562363	
C259	ENGINE COMPT-WATER HEATER	TC	2	561597	------	
C260	ENGINE COMPT-WATER HEATER	TC	1	561073	------	
C261	ENGINE COMPT-WATER HEATER	TC	2	561597	------	
C266	BATTERY COMPT. LTS	AMP MNL	2	561248	561247	
C267	LUGGAGE COMPT. LTS - 1	AMP MNL	2	561248	561247	
C268	LUGGAGE COMPT. LTS - 2	AMP MNL	2	561248	561247	
C269	LUGGAGE COMPT. LTS - 3 RH	AMP MNL	2	561248	561247	
C270	LUGGAGE COMPT. LTS - 3 LH	AMP MNL	2	561248	561247	
C271	LUGGAGE COMPT. LTS - 4	AMP MNL	2	561248	561247	
C272	FR SERVICE CPT LTS	AMP MNL	2	561248	561247	
C274	FR JCT PANEL-DIODES	AMP MNL	15	561987	561986	
C276	FR JCT PANEL-ALARM BUZZER	BOSCH	5	------	561183	
C290	LUGGAGE CPT-DOOR LOCK	AMP MNL	4	560851	560852	
C291	LUGGAGE CPT-DOOR LOCK	AMP MNL	4	560851	560852	
C292	LUGGAGE CPT-DOOR LOCK	AMP MNL	4	560851	560852	
C293	WIPER MOTOR	AMP FF	6	------	561186	
C294	UNDER DASH-WIPER SYST. FEED	AMP MNL	6	561552	561515	
C295	UNDER DASH-WIPER PULSE GEN.	AMP FF	6	------	561186	
C296	FR SERVICE CPT-HEAD LTS	ITT SS	3	561111	561080	
C298	FR LH HAT RACK-AMPLI	MOLEX	6	------	562464	PRIOR REV 010
C299	FR LH HAT RACK-AMPLI	MOLEX	10	------	562465	PRIOR REV 010
C300	FR LH HAT RACK-AMPLI	MOLEX	6	------	562464	PRIOR REV 010
C301	FR LH HAT RACK-AMPLI	MOLEX	10	------	562465	PRIOR REV 010
C302	UNDER DASH-FLASHER MODULE	AMP MNL	2	560900	560898	
C309	ENGINE DDEC III-ECM POWER	PED WP	5	------	562345	
C312	ENGINE DDEC III-ECM SIGNAL	PED WP	3	561781	561782	
C313	ENGINE DDEC III-OUTPUT	PED WP	4	562398	------	
C314	FR SERVICE CPT-PRESS SW KNEEL	PED WP	2	561566	561690	
C315	FR SERVICE CPT-KNEEL ALARM	PED WP	2	561566	561690	
C316	FR SERVICE CPT-KNEEL ALARM	AMP MNL	2	560900	560898	
C326	ENGINE DDEC III- MANUAL TR.	PED WP	4	561610	561611	
C364	FR ROOF-DESTINATION SIGN	AMP MNL	3	561667	561550	
C365	FR ROOF-DESTINATION SIGN	AMP MNL	2	560900	560898	
C368	FR ROOF-DEST. SIGN BALLAST	AMP MNL	3	561667	561550	
C369	FR ROOF-DEST. SIGN OPER. SW.	TORRIX	5	------	562110	
C370	FR ROOF-DEST. SIGN FLUOR.	AMP MNL	2	560900	560898	
C371	FR ROOF-DEST. SIGN FLUOR.	AMP MNL	2	560900	560898	
C372	FR ROOF-DEST. SIGN SPEED SW.	MOLEX	4	561477	561476	

NO.	LOCATION	TYPE	(NB) CAVITY	•PIN HOUSING	•SOCKET HOUSING	
C382	ENGINE GENERATOR 12 VAC RLY	PED WP	1	561605	561577	
C383	LH UNDER DASH-MICRO W/O WIRE	AMP MNL	2	561248	561247	PRIOR REV. 010
C384	LH UNDER DASH-MICRO W/O WIRE	AMP MNL	3	561550	561667	PRIOR REV. 010
C385	BATTERY COMPT. ACC.	AMP MNL	12	561735	561734	
C386	CONDENSER CPT-BYPASS VALVE	PED WP	2	561566	561590	
C387	EVAPORATOR CPT-BYPASS VALVE	PED WP	2	561566	561590	
C388	LH SW PANEL-MASTER SW	SWF	8	------	561107	
C389	EVAPORATOR CPT-WATER PUMP	PED WP	2	561566	561590	
C390	CONDENSER CPT.-A/C JCT BOX	DEUTSCH	24	562280	562283	
C391	CONDENSER CPT.-PRESS.SW	PED WP	2	561566	561590	
C392	CONDENSER CPT.- MOTOR FAN	PED WP	2	561566	561590	
C393	CONDENSER CPT.- MOTOR FAN	PED WP	2	561566	561590	
C394	LH OVER CONSOLE- B/U MONITOR	AMP MNL	4	560851	560852	
C395	LH OVER CONSOLE- B/U MONITOR	AMP MNL	5	------	------	
C396	CONDENSER CPT.- MOTOR FAN	PED WP	2	561566	561590	
C396	HAT RACK SPEAKER	MOLEX	4	562507	562503	
C397	CONDENSER CPT.- MOTOR FAN	PED WP	2	561566	561590	
C426	ENGINE S60 RAD. FAN CLUTCH	PED WP	3	561781	561782	
C430	DRIVER GUARD WATER HTR TIMER	AMP FF	8	561188	562363	
C450	SOUND SYS. JCT. PANEL	MOLEX	4	562507	562503	
C451	WIRELESS MICRO-FIRST CPT BAG	MOLEX	2	562550	562549	
C452	UNDER DASH INSTR. PANEL	MOLEX	2	562550	562549	
C453	SOUND SYS. JCT.PANEL-VCP	PED WP	2	561566	561590	
C454	SOUND SYS.JCT.PAN.-FILT. VCP	PED WP	2	561566	561590	
C455	WIRELESS MICRO-LH HAT-RACK	CINCH	2	562554	562551	
C456	WORLD TRANSM.-RETARDER ACCUM.	PED MP	2	------	562427	
C457	WORLD TRANSM.-MAIN CONNECTOR	DEUTSCH	31	562572	562536	
C458	WORLD TRANSM.-TURBINE SP.SENS	PED MP	2	------	562426	
C459	WORLD TRANSM.-ENGINE SP.SENS.	PED MP	2	------	562426	
C460	WORLD TRANSM.-SPEED SENSOR	ITT	2	------	562541	
C461	WORLD TRANSM.-RETARDER TEMP.	PED MP	2	561566	561590	
C462	WORLD TRANSM.-RETARD SOL."K"	PED MP	2	------	562426	
C463	WORLD TRANSM.-SENSOR CONN.	DEUTSCH	16	562570	562571	
C464	FR SERVICE CPT.-DDL CONN W.T.	PED MP	12	------	562574	
C465	LH CONSOLE-SHIFTER SELECTOR	T & BET	10	------	562429	
C466	FR SERVICE CPT.-RESIS. MOD.	PED WP	3	------	562428	
C467	FR SERVICE CPT.-RESIS. MOD.	PED WP	3	------	562428	
C468	FR SERVICE CPT.-VIM MOD. W.T.	PED MP	18	------	562573	
C470	FR SERVICE CPT.-SILENT 1000	AMP MNL	2	561248	561247	
C471	FR SERVICE CPT.-SILENT 1000	AMP MNL	2	561248	561247	
C472	FR SERVICE CPT.-SILENT 1000	PED WP	2	561566	561690	
C473	FR SERVICE CPT.-SILENT 1000	AMP MNL	3	561667	561550	
C475	FR SERVICE CPT-SPEED SIGN CON	DEUTSCH	6	------	562581	
C475M	FR SERVICE CPT-SPEED SIGN M.T	DEUTSCH	6	562583	------	
C475W	FR SERVICE CPT-SPEED SIGN W.T	DEUTSCH	6	562583	------	
C500	FR JCT PANEL-PRODRIVER	MOLEX	6	562070	562069	
C501	RH CONSOLE-PRODRIVER	PED MP	7	562433	------	
C502	DRIVER GUARD PRE-HTR SW.	SWF	8	------	561107	
C503	DRIVER GUARD PRE-HTR SW.	SWF	2	------	561837	
C504	DRIVER GUARD WEBASTO TIMER	AMP FF	8	561188	562363	
C505	DRIVER GUARD ESPAR TIMER	AMP FF	3	------	562034	
C508	RR JCT BOX-FAN CLUTCH MOD	AMP MNL	6	561552	561515	
CA	FR SERVICE CPT-ECU WORLD TR.	T & BET	34	------	562419	
CB	FR SERVICE CPT-ECU WORLD TR.	T & BET	34	------	562420	

CONNECTORS CODE (C) PAGE G : 2

NO.	LOCATION	TYPE	(NB) CAVITY	*PIN HOUSING	*SOCKET HOUSING
C3	UNDER DASH-LH	AMP CPC	37	561645	561646
C7	FR SERVICE COMPT.-CLUTCH SW	ITT SS	3	561111	561080
C8	FR JCT PANEL VCR FEED	AMP MNL	2	561248	561247 PRIOR REV 010
C11	LH CONSOLE SW-MIRROR	AMP MNL	3	561667	561550
C12	LH CONSOLE SW-MIRROR HTR	AMP MNL	2	561248	561247
C13	LH CONSOLE SW-MIRROR	AMP MNL	6	561552	561515
C14	UNDER DASH LH-MIRROR	AMP MNL	9	561670	561669
C15	UNDER DASH RH-MIRROR	AMP MNL	9	561670	561669
C18	UNDER DASH-FIRE ALARM	AMP MNL	2	560900	560898
C19	UNDER DASH-A/C & HEAT SYST.	TC	10	561072	561110
C20	RR JCT BOX DIODES	AMP MNL	9	561670	561669
C21	LUGGAGE COMPT.-LOCK DOOR MOT.	PED	2	------	562076
C22	ENGINE COMPT.-CYCLOP LT	PED WP	2	561566	561690
C26	UNDER INSTRUMENT.-PANEL RHEO.	TC	2	561030	560997
C29	FR SERVICE COMPT.-VIM FEED	PED WP	3	561781	561782
C32	RH CONSOLE-DRV TEMP SENSOR	BURNDY	3	------	561104
C33	FRSERVICE COMPT. DDEC VSS	PED WP	2	561566	561690
C34	RH CONSOLE-DRV TEMP CTRL	BURNDY	6	------	561103
C35	RECIRULATED AIR GRIL.-SENSER	BURNDY	3	------	561104
C36	LH CONSOLE SW-CRUISE ON/OFF	SWF	8	------	561107
C37	LH CONSOLE SW-CRUISE SET	SWF	8	------	561107
C38	LH CONSOLE SW-CRUISE RESUME	SWF	8	------	561107
C41	UNDER DASH-FLASHER UNIT	TC	2	------	561940
C49	LAVATORY NIGHT LTS	AMP MNL	2	560900	560898
C50	RH CONSOLE-PAS. TEMP CTRL	BURNDY	6	------	561103
C51	RH CONSOLE SW-A/C & HEAT	SWF	8	------	561107
C52	ENGINE COMPT.-COMPRESSOR 05G	PED WP	2	561566	561690
C53	ENGINE COMPT.-COMPRESSOR 05G	PED WP	2	561566	561690
C54	ENGINE COMPT.-COMPRESSOR 05G	TC	1	560098	560697
C61	ENGINE COMPT.-FUEL FILTER	PED WP	2	561566	561690
C65	UNDER LH HAT RACK	MOLEX	4	561477	561476
C67	LH UNDER DASH-AMPLIF. RH SPK	BLAUPUNKT	2	561988	------
C68	LH UNDER DASH-AMPLIF. RH SPK	BLAUPUNKT	2	561988	------
C73	LH SW PANEL-MULTI FUNC. LEV.	AMP FF	8	561188	------
C74	LH SW PANEL-MULTI FUNC. LEV.	AMP FF	6	------	561108
C78	LUGGAGE COMPT.-DOOR LOCK 4 LH	AMP MNL	4	560851	560852
C79	LUGGAGE COMPT.-DOOR LOCK 4 RH	AMP MNL	4	560851	560852
C80	FR JCT PANEL-LUG. DOOR LOCK	AMP MNL	6	561552	561515
C81	LUGGAGE COMPT.-DOOR LOCK 1 LH	AMP MNL	4	560851	560852
C82	LUGGAGE COMPT.-DOOR LOCK 1 RH	AMP MNL	4	560851	560852
C83	UNDER DASH-FLASHER MODULE	TC	10	561072	561110
C84	UNDER DASH-A/C SYSTEM	TC	3	561091	561071
C85	LUGGAGE COMPT.-DOOR LOCK 3 RH	AMP MNL	4	560851	560852
C86	LUGGAGE COMPT.-DOOR LOCK 3 LH	AMP MNL	4	560851	560852
C88	RR END ROOF-CLEARANCE LTS	AMP MNL	2	560900	560898
C90	RR ROOF AUX. A/C THERMOST.	BURNDY	6	------	561103
C91	RR ROOF AUX. A/C TMP SENSOR	BURNDY	6	------	561104
C92	RR ROOF AUX. A/C FAN RH	TC	2	561030	560997
C93	RR ROOF AUX. A/C FAN LH	TC	2	561030	560997
C94	RR ROOF AUX. A/C FAN RES LH	AMP MNL	2	560900	560898
C95	RR ROOF AUX. A/C FAN RES RH	AMP MNL	2	560900	560898
C96	RR ROOF AUX. A/C LIQ SOL VAL	TC	2	561030	560997
C97	RR ROOF AUX. A/C SHUT SOL VAL	AMPHENOL	2	------	560412
C98	CONDENSER CPT.	ITT SS	4	561998	561999
C101	CONDENSER CPT.-A/C PRESS. SW	PED WP	2	561566	561690
C105	UNDER DASH RH-DRV LIQ SOL VL	TC	2	561030	560997
C106	UNDER DASH RH-DRV WTR VALVE	TC	2	561030	560997
C107	UNDER DASH RH-DRV HTR RH FAN	TC	2	561030	560997
C108	UNDER DASH RH-DRV HTR LH FAN	TC	2	561030	560997

CONNECTORS CODE (C) PAGE G : 1

NO.	LOCATION	TYPE	(NB) CAVITY	*PIN HOUSING	*SOCKET HOUSING
C111	LH CONSOLE SW-DRIVER'LTS	SWF	8	------	561107
C112	LH CONSOLE SW-GENERAL LTS	SWF	8	------	561107
C114	ENGINE DDEC-SPEED SIGNAL	PED WP	2	561566	561590
C115	RR JCT BOX-ENGINE ACCES.	DEUTSCH	40	562281	562284
C116	DRIVE AXLE COMPT.-AIR DRYER	PED MP	2	------	562251
C119	ENGINE COMPT.-LH LOWER LAMP	PED WP	6	561606	561607
C120	ENGINE COMPT.-LH LOWER LAMP	PED WP	6	561606	561607
C123	HAT RACK-BALLAST RH	AMP MNL	6	561552	561515
C123	HAT RACK-BALLAST RH	AMP MNL	6	561552	561515
C124	HAT RACK-FLUORESCENT	AMP MNL	4	561551	561668
C125	HAT RACK-FLUORESCENT	AMP MNL	4	561551	561668
C126	HAT RACK-READING LTS	AMP MNL	2	560900	560898
C130	LH CONSOLE SW-READING LTS	SWF	8	------	561107
C131	LH CONSOLE SW-LUG.DOOR LOCK	SWF	8	------	561107
C132	LH CONSOLE SW-PAS & HOS CHIME	SWF	8	------	561107
C133	LH CONSOLE SW-JACOB OR RET.	SWF	8	------	561107
C134	LH CONSOLE SW-GALLEY	SWF	8	------	561107
C135	LH SW PANEL-ETHER	SWF	8	------	561107
C136	LH CONSOLE SW-MIRROR HTR	SWF	8	------	561107
C137	RH SW PANEL-HEAD LAMP	SWF	8	------	561107
C138	RH SW PANEL-SPARE	SWF	8	------	561107
C139	RH SW PANEL-FOG LAMP	SWF	8	------	561107
C140	FR JCT PANEL-BAT. HI/LO	AMP MNL	2	560900	560898
C141	ENGINE COMPT.-B/UP ALARM	PED WP	2	561566	561590
C142	FR SERVICE CPT-LH MARKER LTS	ITT SS	3	561111	561080
C143	RR LH HAT RACK-FEEDING	AMP MNL	9	561661	561662
C144	RR RH HAT RACK-FEEDING	AMP MNL	9	561661	561662
C145	RH HAT RACK-BALLAST	AMP MNL	4	560851	560852
C146	FR SERVICE CPT-RH MARKER LTS	ITT SS	3	561111	561080
C147	RR ROOF LH-EMERGENCY EXIT LTS	AMP MNL	2	560900	560898
C148	RR ROOF RH-EMERGENCY EXIT LTS	AMP MNL	2	560900	560898
C149	LH HAT RACK-BALLAST	AMP MNL	4	560851	560852
C150	FR RH HAT RACK-110V FLUOR	AMP MNL	2	561248	561247
C151	FR LH HAT RACK-110V FLUOR	AMP MNL	2	561248	561247
C152	LH HAT RACK-GENERAL LTS	AMP MNL	3	561667	561550
C153	RH HAT RACK-GENERAL LTS	AMP MNL	3	561667	561550
C154	RH SW PANEL-HAZARD	SWF	8	------	561107
C155	LH SW PANEL-FAST IDLE	SWF	8	------	561107
C156	LH SW PANEL-STP ENG. OVER.	SWF	8	------	561107
C158	RR ROOF AUX. A/C FEEDING	AMP MNL	3	561667	561550
C160	FR SERVICE CPT-INTERFACE	AMP CPC	37	561644	561646
C161	ENGINE DDEC III-ECM	PED	30	------	561600
C162	ENGINE DDEC III-ACCESSORIES	PED WP	4	561610	561611
C163	ENGINE CPT-COOLANT PROBE	PED MP	2	------	562350
C164	FR SERVICE JCT BOX	AMP CPC	22	561709	561710
C165	FR SERVICE JCT BOX	AMP CPC	16	561693	561695
C166	UNDER INSTRUMENT PANEL	AMP CPC	16	561639	561640
C167	FR SERVICE CPT-EL. FOOT PEDAL	PED WP	3	561781	561782
C168	FR SERVICE CPT-DDR	DEUTSCH	6	562360	------
C169	FR SERVICE CPT-WORLD TR. VIW	AMP CPC	16	561638	561640
C172	ENGINE COMPT-WATER TANK HEAT.	PED WP	2	561566	561690
C173	LAV.PORTABLE-WATER TANK HEAT.	AMP MNL	2	560900	560898
C175	FR SERV CPT-KNEELING FEEDING	PED WP	3	561781	561782
C177	GALLEY-REFRIGERATOR	AMP MNL	2	561248	561247

NO.	LOCATION	TYPE	(NB) CAVITY	•PIN HOUSING	•SOCKET HOUSING	
C179	RH HAT RACK-110V MONITOR	MOLEX	4	561477	561476	PRIOR REV. 010
C180	FR SERV CPT-KNEEL. DIODE	AMP MNL	9	561670	561699	
C181	FR SERV CPT-KNEELING MODULE	AMP MNL	12	561735	561734	
C182	FR SERVICE CPT-SPEED SW	AMP HDP	15	------	562012	
C184	FR SERV CPT-KNEEL. MOD. CTRL	AMP MNL	3	------	561550	
C184	FR AXLE-KNEELING PROXIMITY SW	AMP MNL	3	561667	561550	
C185	FR SERV CPT-KNEEL. MOD. EXH.	AMP MNL	3	------	561550	
C187	FR SERV CPT-KNEEL. MOD. BRK	AMP MNL	3	------	561550	
C187	FR SERVICE JCT BOX-RESISTORS	AMP MNL	6	561552	561515	
C188	LH CONSOLE SW-KNEELING	SWF	8	------	561107	
C190	FR SERVICE CPT.-WORLD TR VIM	PED WP	30	------	561600	
C192	GALLEY-FEEDING	AMP CPC	3	561862	561847	
C194	GALLEY SW-CONTAINER RH	SWF	8	------	561107	
C195	GALLEY SW-CONTAINER LH	SWF	8	------	561107	
C199	FR SERV. JCT BOX-SERVICE BRK	AMP MNL	3	561667	561550	
C200	LH CONSOLE SW-24V FLUOR	SWF	8	------	561107	
C201	UNDER INSTRUMENT PANEL	AMP MNL	2	560900	560898	PRIOR REV. 010
C202	UNDER INSTRUMENT PANEL	AMP CPC	9	561636	561637	
C205	LH UNDER DASH-AMPLIF. LH SPK	BLAUPUNKT	2	561988	------	
C206	RH CONSOLE-FR DEFROSTER	TC	2	561030	560997	
C207	RH CONSOLE-DRV RHEOSTAT	AMP MNL	6	561552	561515	
C208	UNDER DASH-DRV HTR MODULE	AMP MNL	9	561670	561669	
C209	UNDER DASH-DRV HTR MODULE	AMP MNL	9	561670	561669	
C210	LH UNDER DASH-AMPLIF. LH SPK	BLAUPUNKT	2	561988	------	
C211	RH CONSOLE-VCR VOLUME	AMP MNL	4	561551	561668	PRIOR REV. 010
C212	LH CONSOLE SW-VCR VIDEO	SWF	8	------	561107	PRIOR REV. 010
C213	FR ROOF-CLEARANCE LT	AMP MNL	2	560900	560898	
C214	UNDER DASH PANEL-TACHOGRAPH	V.D.O.	8	------	562041	
C215	UNDER DASH PANEL-TACHOGRAPH	V.D.O.	8	------	562043	
C216	UNDER DASH PANEL-TACHOGRAPH	AMP MNL	4	560851	560852	
C217	FR LH HAT RACK-SPEAKER	AMP MNL	4	561659	561660	
C218	FR RH HAT RACK-SPEAKER	AMP MNL	4	561659	561660	
C219	DASH RHEOSTAT-P.A. VOLUME	MOLEX	4	561477	561476	PRIOR REV. 010
C220	LH UNDER DASH-P.A. VOLUME	AMP MNL	3	561667	561550	PRIOR REV. 010
C221	LH UNDER DASH-AMPLIFIER FEED	AMP MNL	3	561550	561667	PRIOR REV. 010
C222	LH UNDER DASH-P.A. RADIO	AMP MNL	9	561670	561669	PRIOR REV. 010
C223	LH UNDER DASH-P.A. RADIO	AMP MNL	9	561670	561669	PRIOR REV. 010
C224	LH UNDER DASH-PA & RADIO FEED	AMP MNL	6	561552	561515	PRIOR REV. 010
C225	LH UNDER DASH-PA MICRO OUTLET	AMP MNL	3	561667	561550	PRIOR REV. 010
C226	LH UNDER DASH-PA MICRO OUTLET	AMP MNL	3	561667	561550	PRIOR REV. 010
C227	RH CONSOLE-SPEAKER CONTROL SW	SWF	8	------	561107	PRIOR REV. 010
C229	LH UNDER DASH-PA DRV SPEAKERS	AMP MNL	4	561551	561668	PRIOR REV. 010
C230	ENG.CPT.-FUEL PRIME PUMP SW.	PED WP	2	561566	561690	
C231	ENG.CPT.-FUEL PRIME PUMP	PED WP	2	561566	561690	
C232	UNDER L.H. CONSOLE	MOLEX	4	561477	561476	PRIOR REV. 010
C233	MICRO OUTLET SOCKET	MOLEX	4	561477	561476	PRIOR REV. 010
C234	UNDER INSTRUMENT PANEL-VDO	AMP MNL	4	560851	560852	PRIOR REV. 010
C234	UNDER INSTRUMENT PANEL-VDO	AMP FF	8	------	562363	
C235	UNDER INSTRUMENT PANEL-VDO	AMP MNL	4	560851	560852	PRIOR REV. 010
C235	UNDER INSTRUMENT PANEL-VDO	AMP FF	8	------	562363	
C236	FR SERVICE CPT CENTER-ABS	AMP CPC	14	561585	561583	
C237	FR AXLE CPT-ABS RH SENSOR	WABCO	2	641132	------	
C238	FR AXLE CPT-ABS RH VALVE	WABCO	3	------	641098	
C239	FR AXLE CPT-ABS LH VALVE	WABCO	3	------	641098	
C240	FR AXLE CPT-ABS LH SENSOR	WABCO	2	641132	------	
C241	DRIVE AXLE CPT-ABS	PED WP	6	561606	561607	
C242	DRIVE AXLE CPT-ABS LH SENSOR	DEUTSCH	2	562486	562485	

CONNECTORS CODE (C) PAGE G : 2

NO.	LOCATION	TYPE	(NB) CAVITY	•PIN HOUSING	•SOCKET HOUSING	
C243	DRIVE AXLE CPT-ABS LH VALVE	WABCO	3	------	641098	
C244	DRIVE AXLE CPT-ABS RH VALVE	WABCO	3	------	641098	
C245	DRIVE AXLE CPT-ABS RH SENSOR	WABCO	2	641132	------	PROIR S570
C245	DRIVE AXLE CPT-ABS RH SENSOR	DEUTSCH	2	562486	562485	EFF. W/S570
C246	DRIVE AXLE CPT-ABS SPARE	PED WP	4	561610	561611	
C247	FR SERVICE CPT-ABS MODULE	WABCO	35	------	561094	
C248	DRIVE AXLE CPT-ABS	PED WP	6	561606	561607	
C249	FR SERVICE CPT-ABS/DDEC	PED WP	2	561566	561690	
C250	RH SW PANEL-B/UP CANCEL	SWF	8	------	561107	
C251	RH SW PANEL-SEAT HTR	SWF	8	------	561107	
C252	LH SW PANEL-SWITCH LT	SWF	2	------	561837	
C254	FR SERVICE JCT BOX-ABS	AMP CPC	16	561693	561695	
C255	RH CONSOLE-RADIO	AMP MNL	9	561670	561669	PRIOR REV 010
C257	ENGINE COMPT-WATER HEATER	AMP FF	6	------	561186	
C258	DRIVER GUARD WATER HTR TIMER	AMP FF	8	561188	562363	
C259	ENGINE COMPT-WATER HEATER	TC	2	561597	------	
C260	ENGINE COMPT-WATER HEATER	TC	1	561073	------	
C261	ENGINE COMPT-WATER HEATER	TC	2	561597	------	
C266	BATTERY COMPT. LTS	AMP MNL	2	561248	561247	
C267	LUGGAGE COMPT. LTS - 1	AMP MNL	2	561248	561247	
C268	LUGGAGE COMPT. LTS - 2	AMP MNL	2	561248	561247	
C269	LUGGAGE COMPT. LTS - 3 RH	AMP MNL	2	561248	561247	
C270	LUGGAGE COMPT. LTS - 3 LH	AMP MNL	2	561248	561247	
C271	LUGGAGE COMPT. LTS - 4	AMP MNL	2	561248	561247	
C272	FR SERVICE CPT LTS	AMP MNL	2	561248	561247	
C274	FR JCT PANEL-DIODES	AMP MNL	15	561987	561986	
C276	FR JCT PANEL-ALARM BUZZER	BOSCH	5	------	561183	
C290	LUGGAGE CPT-DOOR LOCK	AMP MNL	4	560851	560852	
C291	LUGGAGE CPT-DOOR LOCK	AMP MNL	4	560851	560852	
C292	LUGGAGE CPT-DOOR LOCK	AMP MNL	4	560851	560852	
C293	WIPER MOTOR	AMP FF	6	------	561186	
C294	UNDER DASH-WIPER SYST. FEED	AMP MNL	6	561552	561515	
C295	UNDER DASH-WIPER PULSE GEN.	AMP FF	6	------	561186	
C296	FR SERVICE CPT-HEAD LTS	ITT SS	3	561111	561080	
C298	FR LH HAT RACK-AMPLI	MOLEX	6	------	562464	PRIOR REV 010
C299	FR LH HAT RACK-AMPLI	MOLEX	10	------	562465	PRIOR REV 010
C300	FR LH HAT RACK-AMPLI	MOLEX	6	------	562464	PRIOR REV 010
C301	FR LH HAT RACK-AMPLI	MOLEX	10	------	562465	PRIOR REV 010
C302	UNDER DASH-FLASHER MODULE	AMP MNL	2	560900	560898	
C309	ENGINE DDEC III-ECM POWER	PED WP	5	------	562345	
C312	ENGINE DDEC III-ECM SIGNAL	PED WP	3	561781	561782	
C313	ENGINE DDEC III-OUTPUT	PED WP	4	562398	------	
C314	FR SERVICE CPT-PRESS SW KNEEL	PED WP	2	561566	561690	
C315	FR SERVICE CPT-KNEEL ALARM	PED WP	2	561566	561690	
C316	FR SERVICE CPT-KNEEL ALARM	AMP MNL	2	560900	560898	
C326	ENGINE DDEC III- MANUAL TR.	PED WP	4	561610	561611	
C364	FR ROOF-DESTINATION SIGN	AMP MNL	3	561667	561550	
C365	FR ROOF-DESTINATION SIGN	AMP MNL	2	560900	560898	
C368	FR ROOF-DEST. SIGN BALLAST	AMP MNL	3	561667	561550	
C369	FR ROOF-DEST. SIGN OPER. SW.	TORRIX	5	------	562110	
C370	FR ROOF-DEST. SIGN FLUOR.	AMP MNL	2	560900	560898	
C371	FR ROOF-DEST. SIGN FLUOR.	AMP MNL	2	560900	560898	
C372	FR ROOF-DEST. SIGN SPEED SW.	MOLEX	4	561477	561476	

NO.	LOCATION	TYPE	(NB) CAVITY	•PIN HOUSING	•SOCKET HOUSING	
C382	ENGINE GENERATOR 12 VAC RLY	PED WP	1	561605	561577	
C383	LH UNDER DASH-MICRO W/O WIRE	AMP MNL	2	561248	561247	PRIOR REV. 010
C384	LH UNDER DASH-MICRO W/O WIRE	AMP MNL	3	561550	561667	PRIOR REV. 010
C385	BATTERY COMPT. ACC.	AMP MNL	12	561735	561734	
C386	CONDENSER CPT-BYPASS VALVE	PED WP	2	561566	561590	
C387	EVAPORATOR CPT-BYPASS VALVE	PED WP	2	561566	561590	
C388	LH SW PANEL-MASTER SW	SWF	8	------	561107	
C389	EVAPORATOR CPT-WATER PUMP	PED WP	2	561566	561590	
C390	CONDENSER CPT.-A/C JCT BOX	DEUTSCH	24	562280	562283	
C391	CONDENSER CPT.-PRESS.SW	PED WP	2	561566	561590	
C392	CONDENSER CPT.- MOTOR FAN	PED WP	2	561566	561590	
C393	CONDENSER CPT.- MOTOR FAN	PED WP	2	561566	561590	
C394	LH OVER CONSOLE- B/U MONITOR	AMP MNL	4	560851	560852	
C395	LH OVER CONSOLE- B/U MONITOR	AMP MNL	5	------	------	
C396	CONDENSER CPT.- MOTOR FAN	PED WP	2	561566	561590	
C396	HAT RACK SPEAKER	MOLEX	4	562507	562503	
C397	CONDENSER CPT.- MOTOR FAN	PED WP	2	561566	561590	
C426	ENGINE S60 RAD. FAN CLUTCH	PED WP	3	561781	561782	
C430	DRIVER GUARD WATER HTR TIMER	AMP FF	8	561188	562363	
C450	SOUND SYS. JCT. PANEL	MOLEX	4	562507	562503	
C451	WIRELESS MICRO-FIRST CPT BAG	MOLEX	2	562550	562549	
C452	UNDER DASH INSTR. PANEL	MOLEX	2	562550	562549	
C453	SOUND SYS. JCT.PANEL-VCP	PED WP	2	561566	561590	
C454	SOUND SYS.JCT.PAN.-FILT. VCP	PED WP	2	561566	561590	
C455	WIRELESS MICRO-LH HAT-RACK	CINCH	2	562554	562551	
C456	WORLD TRANSM.-RETARDER ACCUM.	PED MP	2	------	562427	
C457	WORLD TRANSM.-MAIN CONNECTOR	DEUTSCH	31	562572	562536	
C458	WORLD TRANSM.-TURBINE SP.SENS	PED MP	2	------	562426	
C459	WORLD TRANSM.-ENGINE SP.SENS.	PED MP	2	------	562426	
C460	WORLD TRANSM.-SPEED SENSOR	ITT	2	------	562541	
C461	WORLD TRANSM.-RETARDER TEMP.	PED MP	2	561566	561590	
C462	WORLD TRANSM.-RETARD SOL."K"	PED MP	2	------	562426	
C463	WORLD TRANSM.-SENSOR CONN.	DEUTSCH	16	562570	562571	
C464	FR SERVICE CPT.-DDL CONN W.T.	PED MP	12	------	562574	
C465	LH CONSOLE-SHIFTER SELECTOR	T & BET	10	------	562429	
C466	FR SERVICE CPT.-RESIS. MOD.	PED WP	3	------	562428	
C467	FR SERVICE CPT.-RESIS. MOD.	PED WP	3	------	562428	
C468	FR SERVICE CPT.-VIM MOD. W.T.	PED MP	18	------	562573	
C470	FR SERVICE CPT.-SILENT 1000	AMP MNL	2	561248	561247	
C471	FR SERVICE CPT.-SILENT 1000	AMP MNL	2	561248	561247	
C472	FR SERVICE CPT.-SILENT 1000	PED WP	2	561566	561690	
C473	FR SERVICE CPT.-SILENT 1000	AMP MNL	3	561667	561550	
C475	FR SERVICE CPT-SPEED SIGN CON	DEUTSCH	6	------	562581	
C475M	FR SERVICE CPT-SPEED SIGN M.T	DEUTSCH	6	562583	------	
C475W	FR SERVICE CPT-SPEED SIGN W.T	DEUTSCH	6	562583	------	
C500	FR JCT PANEL-PRODRIVER	MOLEX	6	562070	562069	
C501	RH CONSOLE-PRODRIVER	PED MP	7	562433	------	
C502	DRIVER GUARD PRE-HTR SW.	SWF	8	------	561107	
C503	DRIVER GUARD PRE-HTR SW.	SWF	2	------	561837	
C504	DRIVER GUARD WEBASTO TIMER	AMP FF	8	561188	562363	
C505	DRIVER GUARD ESPAR TIMER	AMP FF	3	------	562034	
C508	RR JCT BOX-FAN CLUTCH MOD	AMP MNL	6	561552	561515	
C510	FR SERVICE CPT-RESIST.RUN LTS	PED MP	2	561566	561690	
C544	SOUND SYS.JCT.PANEL-SEET AUD.	PED WP	3	561781	561782	
CA	FR SERVICE CPT-ECU WORLD TR.	T & BET	34	------	562419	
CB	FR SERVICE CPT-ECU WORLD TR.	T & BET	34	------	562420	

CONNECTORS CODE (C) PAGE G : 2

NO.	LOCATION	TYPE	(NB) CAVITY	•PIN HOUSING	•SOCKET HOUSING

NO.	LOCATION	TYPE	(NB) CAVITY	*PIN HOUSING	*SOCKET HOUSING
C3	UNDER DASH-LH	AMP CPC	37	561645	561646
C7	FR SERVICE COMPT.-CLUTCH SW	ITT SS	3	561111	561080
C8	FR JCT PANEL VCR FEED	AMP MNL	2	561248	561247 PRIOR REV 010
C11	LH CONSOLE SW-MIRROR	AMP MNL	3	561667	561550
C12	LH CONSOLE SW-MIRROR HTR	AMP MNL	2	561248	561247
C13	LH CONSOLE SW-MIRROR	AMP MNL	6	561552	561515
C14	UNDER DASH LH-MIRROR	AMP MNL	9	561670	561669
C15	UNDER DASH RH-MIRROR	AMP MNL	9	561670	561669
C18	UNDER DASH-FIRE ALARM	AMP MNL	2	560900	560898
C19	UNDER DASH-A/C & HEAT SYST.	TC	10	561072	561110
C20	RR JCT BOX DIODES	AMP MNL	9	561670	561669
C21	LUGGAGE COMPT.-LOCK DOOR MOT.	PED	2	------	562076
C22	ENGINE COMPT.-CYCLOP LT	PED WP	2	561566	561690
C26	UNDER INSTRUMENT.-PANEL RHEO.	TC	2	561030	560997
C29	FR SERVICE COMPT.-VIM FEED	PED WP	3	561781	561782
C32	RH CONSOLE-DRV TEMP SENSOR	BURNDY	3	------	561104
C33	FRSERVICE COMPT. DDEC VSS	PED WP	2	561566	561690
C34	RH CONSOLE-DRV TEMP CTRL	BURNDY	6	------	561103
C35	RECIRULATED AIR GRIL.-SENSER	BURNDY	3	------	561104
C36	LH CONSOLE SW-CRUISE ON/OFF	SWF	8	------	561107
C37	LH CONSOLE SW-CRUISE SET	SWF	8	------	561107
C38	LH CONSOLE SW-CRUISE RESUME	SWF	8	------	561107
C41	UNDER DASH-FLASHER UNIT	TC	2	------	561940
C49	LAVATORY NIGHT LTS	AMP MNL	2	560900	560898
C50	RH CONSOLE-PAS. TEMP CTRL	BURNDY	6	------	561103
C51	RH CONSOLE SW-A/C & HEAT	SWF	8	------	561107
C52	ENGINE COMPT.-COMPRESSOR 05G	PED WP	2	561566	561690
C53	ENGINE COMPT.-COMPRESSOR 05G	PED WP	2	561566	561690
C54	ENGINE COMPT.-COMPRESSOR 05G	TC	1	560098	560697
C61	ENGINE COMPT.-FUEL FILTER	PED WP	2	561566	561690
C65	UNDER LH HAT RACK	MOLEX	4	561477	561476
C67	LH UNDER DASH-AMPLIF. RH SPK	BLAUPUNKT	2	561988	------
C68	LH UNDER DASH-AMPLIF. RH SPK	BLAUPUNKT	2	561988	------
C73	LH SW PANEL-MULTI FUNC. LEV.	AMP FF	8	561188	------
C74	LH SW PANEL-MULTI FUNC. LEV.	AMP FF	6	------	561108
C78	LUGGAGE COMPT.-DOOR LOCK 4 LH	AMP MNL	4	560851	560852
C79	LUGGAGE COMPT.-DOOR LOCK 4 RH	AMP MNL	4	560851	560852
C80	FR JCT PANEL-LUG. DOOR LOCK	AMP MNL	6	561552	561515
C81	LUGGAGE COMPT.-DOOR LOCK 1 LH	AMP MNL	4	560851	560852
C82	LUGGAGE COMPT.-DOOR LOCK 1 RH	AMP MNL	4	560851	560852
C83	UNDER DASH-FLASHER MODULE	TC	10	561072	561110
C84	UNDER DASH-A/C SYSTEM	TC	3	561091	561071
C85	LUGGAGE COMPT.-DOOR LOCK 3 RH	AMP MNL	4	560851	560852
C86	LUGGAGE COMPT.-DOOR LOCK 3 LH	AMP MNL	4	560851	560852
C88	RR END ROOF-CLEARANCE LTS	AMP MNL	2	560900	560898
C90	RR ROOF AUX. A/C THERMOST.	BURNDY	6	------	561103
C91	RR ROOF AUX. A/C TMP SENSOR	BURNDY	6	------	561104
C92	RR ROOF AUX. A/C FAN RH	TC	2	561030	560997
C93	RR ROOF AUX. A/C FAN LH	TC	2	561030	560997
C94	RR ROOF AUX. A/C FAN RES LH	AMP MNL	2	560900	560898
C95	RR ROOF AUX. A/C FAN RES RH	AMP MNL	2	560900	560898
C96	RR ROOF AUX. A/C LIQ SOL VAL	TC	2	561030	560997
C97	RR ROOF AUX. A/C SHUT SOL VAL	AMPHENOL	2	------	560412
C98	CONDENSER CPT.	ITT SS	4	561998	561999
C101	CONDENSER CPT.-A/C PRESS. SW	PED WP	2	561566	561690
C105	UNDER DASH RH-DRV LIQ SOL VL	TC	2	561030	560997
C106	UNDER DASH RH-DRV WTR VALVE	TC	2	561030	560997
C107	UNDER DASH RH-DRV HTR RH FAN	TC	2	561030	560997
C108	UNDER DASH RH-DRV HTR LH FAN	TC	2	561030	560997

CONNECTORS CODE (C) PAGE G : 1

NO.	LOCATION	TYPE	(NB) CAVITY	*PIN HOUSING	*SOCKET HOUSING
C111	LH CONSOLE SW-DRIVER'LTS	SWF	8	------	561107
C112	LH CONSOLE SW-GENERAL LTS	SWF	8	------	561107
C114	ENGINE DDEC-SPEED SIGNAL	PED WP	2	561566	561590
C115	RR JCT BOX-ENGINE ACCES.	DEUTSCH	40	562281	562284
C116	DRIVE AXLE COMPT.-AIR DRYER	PED MP	2	------	562251
C119	ENGINE COMPT.-LH LOWER LAMP	PED WP	6	561606	561607
C120	ENGINE COMPT.-LH LOWER LAMP	PED WP	6	561606	561607
C123	HAT RACK-BALLAST RH	AMP MNL	6	561552	561515
C124	HAT RACK-FLUORESCENT	AMP MNL	4	561551	561668
C125	HAT RACK-FLUORESCENT	AMP MNL	4	561551	561668
C126	HAT RACK-READING LTS	AMP MNL	2	560900	560898
C130	LH CONSOLE SW-READING LTS	SWF	8	------	561107
C131	LH CONSOLE SW-LUG.DOOR LOCK	SWF	8	------	561107
C132	LH CONSOLE SW-PAS & HOS CHIME	SWF	8	------	561107
C133	LH CONSOLE SW-JACOB OR RET.	SWF	8	------	561107
C134	LH CONSOLE SW-GALLEY	SWF	8	------	561107
C135	LH SW PANEL-ETHER	SWF	8	------	561107
C136	LH CONSOLE SW-MIRROR HTR	SWF	8	------	561107
C137	RH SW PANEL-HEAD LAMP	SWF	8	------	561107
C138	RH SW PANEL-SPARE	SWF	8	------	561107
C139	RH SW PANEL-FOG LAMP	SWF	8	------	561107
C140	FR JCT PANEL-BAT. HI/LO	AMP MNL	2	560900	560898
C141	ENGINE COMPT.-B/UP ALARM	PED WP	2	561566	561590
C142	FR SERVICE CPT-LH MARKER LTS	ITT SS	3	561111	561080
C143	RR LH HAT RACK-FEEDING	AMP MNL	9	561661	561662
C144	RR RH HAT RACK-FEEDING	AMP MNL	9	561661	561662
C145	RH HAT RACK-BALLAST	AMP MNL	4	560851	560852
C146	FR SERVICE CPT-RH MARKER LTS	ITT SS	3	561111	561080
C147	RR ROOF LH-EMERGENCY EXIT LTS	AMP MNL	2	560900	560898
C148	RR ROOF RH-EMERGENCY EXIT LTS	AMP MNL	2	560900	560898
C149	LH HAT RACK-BALLAST	AMP MNL	4	560851	560852
C150	FR RH HAT RACK-110V FLUOR	AMP MNL	2	561248	561247
C151	FR LH HAT RACK-110V FLUOR	AMP MNL	2	561248	561247
C152	LH HAT RACK-GENERAL LTS	AMP MNL	3	561667	561550
C153	RH HAT RACK-GENERAL LTS	AMP MNL	3	561667	561550
C154	RH SW PANEL-HAZARD	SWF	8	------	561107
C155	LH SW PANEL-FAST IDLE	SWF	8	------	561107
C156	LH SW PANEL-STP ENG. OVER.	SWF	8	------	561107
C158	RR ROOF AUX. A/C FEEDING	AMP MNL	3	561667	561550
C160	FR SERVICE CPT-INTERFACE	AMP CPC	37	561644	561646
C161	ENGINE DDEC III-ECM	PED	30	------	561600
C162	ENGINE DDEC III-ACCESSORIES	PED WP	4	561610	561611
C163	ENGINE CPT-COOLANT PROBE	PED MP	2	------	562350
C164	FR SERVICE JCT BOX	AMP CPC	22	561709	561710
C165	FR SERVICE JCT BOX	AMP CPC	16	561693	561695
C166	UNDER INSTRUMENT PANEL	AMP CPC	16	561639	561640
C167	FR SERVICE CPT-EL. FOOT PEDAL	PED WP	3	561781	561782
C168	FR SERVICE CPT-DDR	DEUTSCH	6	562360	------
C169	FR SERVICE CPT-WORLD TR. VIW	AMP CPC	16	561638	561640
C172	ENGINE COMPT-WATER TANK HEAT.	PED WP	2	561566	561690
C173	LAV.PORTABLE-WATER TANK HEAT.	AMP MNL	2	560900	560898
C175	FR SERV CPT-KNEELING FEEDING	PED WP	3	561781	561782
C177	GALLEY-REFRIGERATOR	AMP MNL	2	561248	561247

NO.	LOCATION	TYPE	(NB) CAVITY	*PIN HOUSING	*SOCKET HOUSING	
C179	RH HAT RACK-110V MONITOR	MOLEX	4	561477	561476	PRIOR REV. 010
C180	FR SERV CPT-KNEEL. DIODE	AMP MNL	9	561670	561699	
C181	FR SERV CPT-KNEELING MODULE	AMP MNL	12	561735	561734	
C182	FR SERVICE CPT-SPEED SW	AMP HDP	15	------	562012	
C184	FR SERV CPT-KNEEL. MOD. CTRL	AMP MNL	3	------	561550	
C184	FR AXLE-KNEELING PROXIMITY SW	AMP MNL	3	561667	561550	
C185	FR SERV CPT-KNEEL. MOD. EXH.	AMP MNL	3	------	561550	
C187	FR SERV CPT-KNEEL. MOD. BRK	AMP MNL	3	------	561550	
C187	FR SERVICE JCT BOX-RESISTORS	AMP MNL	6	561552	561515	
C188	LH CONSOLE SW-KNEELING	SWF	8	------	561107	
C190	FR SERVICE CPT.-WORLD TR VIM	PED WP	30	------	561600	
C192	GALLEY-FEEDING	AMP CPC	3	561862	561847	
C194	GALLEY SW-CONTAINER RH	SWF	8	------	561107	
C195	GALLEY SW-CONTAINER LH	SWF	8	------	561107	
C199	FR SERV. JCT BOX-SERVICE BRK	AMP MNL	3	561667	561550	
C200	LH CONSOLE SW-24V FLUOR	SWF	8	------	561107	
C201	UNDER INSTRUMENT PANEL	AMP MNL	2	560900	560898	PRIOR REV. 010
C202	UNDER INSTRUMENT PANEL	AMP CPC	9	561636	561637	
C205	LH UNDER DASH-AMPLIF. LH SPK	BLAUPUNKT	2	561988	------	
C206	RH CONSOLE-FR DEFROSTER	TC	2	561030	560997	
C207	RH CONSOLE-DRV RHEOSTAT	AMP MNL	6	561552	561515	
C208	UNDER DASH-DRV HTR MODULE	AMP MNL	9	561670	561669	
C209	UNDER DASH-DRV HTR MODULE	AMP MNL	9	561670	561669	
C210	LH UNDER DASH-AMPLIF. LH SPK	BLAUPUNKT	2	561988	------	
C211	RH CONSOLE-VCR VOLUME	AMP MNL	4	561551	561668	PRIOR REV. 010
C212	LH CONSOLE SW-VCR VIDEO	SWF	8	------	561107	PRIOR REV. 010
C213	FR ROOF-CLEARANCE LT	AMP MNL	2	560900	560898	
C214	UNDER DASH PANEL-TACHOGRAPH	V.D.O.	8	------	562041	
C215	UNDER DASH PANEL-TACHOGRAPH	V.D.O.	8	------	562043	
C216	UNDER DASH PANEL-TACHOGRAPH	AMP MNL	4	560851	560852	
C217	FR LH HAT RACK-SPEAKER	AMP MNL	4	561659	561660	
C218	FR RH HAT RACK-SPEAKER	AMP MNL	4	561659	561660	
C219	DASH RHEOSTAT-P.A. VOLUME	MOLEX	4	561477	561476	PRIOR REV. 010
C220	LH UNDER DASH-P.A. VOLUME	AMP MNL	3	561667	561550	PRIOR REV. 010
C221	LH UNDER DASH-AMPLIFIER FEED	AMP MNL	3	561550	561667	PRIOR REV. 010
C222	LH UNDER DASH-P.A. RADIO	AMP MNL	9	561670	561669	PRIOR REV. 010
C223	LH UNDER DASH-P.A. RADIO	AMP MNL	9	561670	561669	PRIOR REV. 010
C224	LH UNDER DASH-PA & RADIO FEED	AMP MNL	6	561552	561515	PRIOR REV. 010
C225	LH UNDER DASH-PA MICRO OUTLET	AMP MNL	3	561667	561550	PRIOR REV. 010
C226	LH UNDER DASH-PA MICRO OUTLET	AMP MNL	3	561667	561550	PRIOR REV. 010
C227	RH CONSOLE-SPEAKER CONTROL SW	SWF	8	------	561107	PRIOR REV. 010
C229	LH UNDER DASH-PA DRV SPEAKERS	AMP MNL	4	561551	561668	PRIOR REV. 010
C230	ENG.CPT.-FUEL PRIME PUMP SW.	PED WP	2	561566	561690	
C231	ENG.CPT.-FUEL PRIME PUMP	PED WP	2	561566	561690	
C232	UNDER L.H. CONSOLE	MOLEX	4	561477	561476	PRIOR REV. 010
C233	MICRO OUTLET SOCKET	MOLEX	4	561477	561476	PRIOR REV. 010
C234	UNDER INSTRUMENT PANEL-VDO	AMP MNL	4	560851	560852	PRIOR REV. 010
C234	UNDER INSTRUMENT PANEL-VDO	AMP FF	8	------	562363	
C235	UNDER INSTRUMENT PANEL-VDO	AMP MNL	4	560851	560852	PRIOR REV. 010
C235	UNDER INSTRUMENT PANEL-VDO	AMP FF	8	------	562363	
C236	FR SERVICE CPT CENTER-ABS	AMP CPC	14	561585	561583	
C237	FR AXLE CPT-ABS RH SENSOR	WABCO	2	641132	------	
C238	FR AXLE CPT-ABS RH VALVE	WABCO	3	------	641098	
C239	FR AXLE CPT-ABS LH VALVE	WABCO	3	------	641098	
C240	FR AXLE CPT-ABS LH SENSOR	WABCO	2	641132	------	
C241	DRIVE AXLE CPT-ABS	PED WP	6	561606	561607	
C242	DRIVE AXLE CPT-ABS LH SENSOR	DEUTSCH	2	562486	562485	

CONNECTORS CODE (C) PAGE G : 2

NO.	LOCATION	TYPE	(NB) CAVITY	*PIN HOUSING	*SOCKET HOUSING	
C243	DRIVE AXLE CPT-ABS LH VALVE	WABCO	3	------	641098	
C244	DRIVE AXLE CPT-ABS RH VALVE	WABCO	3	------	641098	
C245	DRIVE AXLE CPT-ABS RH SENSOR	WABCO	2	641132	------	PROIR S570
C245	DRIVE AXLE CPT-ABS RH SENSOR	DEUTSCH	2	562486	562485	EFF. W/S570
C246	DRIVE AXLE CPT-ABS SPARE	PED WP	4	561610	561611	
C247	FR SERVICE CPT-ABS MODULE	WABCO	35	------	561094	
C248	DRIVE AXLE CPT-ABS	PED WP	6	561606	561607	
C249	FR SERVICE CPT-ABS/DDEC	PED WP	2	561566	561690	
C250	RH SW PANEL-B/UP CANCEL	SWF	8	------	561107	
C251	RH SW PANEL-SEAT HTR	SWF	8	------	561107	
C252	LH SW PANEL-SWITCH LT	SWF	2	------	561837	
C254	FR SERVICE JCT BOX-ABS	AMP CPC	16	561693	561695	
C255	RH CONSOLE-RADIO	AMP MNL	9	561670	561669	PRIOR REV 010
C257	ENGINE COMPT-WATER HEATER	AMP FF	6	------	561186	
C258	DRIVER GUARD WATER HTR TIMER	AMP FF	8	561188	562363	
C259	ENGINE COMPT-WATER HEATER	TC	2	561597	------	
C260	ENGINE COMPT-WATER HEATER	TC	1	561073	------	
C261	ENGINE COMPT-WATER HEATER	TC	2	561597	------	
C266	BATTERY COMPT. LTS	AMP MNL	2	561248	561247	
C267	LUGGAGE COMPT. LTS - 1	AMP MNL	2	561248	561247	
C268	LUGGAGE COMPT. LTS - 2	AMP MNL	2	561248	561247	
C269	LUGGAGE COMPT. LTS - 3 RH	AMP MNL	2	561248	561247	
C270	LUGGAGE COMPT. LTS - 3 LH	AMP MNL	2	561248	561247	
C271	LUGGAGE COMPT. LTS - 4	AMP MNL	2	561248	561247	
C272	FR SERVICE CPT LTS	AMP MNL	2	561248	561247	
C274	FR JCT PANEL-DIODES	AMP MNL	15	561987	561986	
C276	FR JCT PANEL-ALARM BUZZER	BOSCH	5	------	561183	
C281	LH CONSOLE- FR. DEST. SIGN	SWF	2	------	561837	
C282	FR. ROOF- DEST. SIGN	AMP CPC	9	561636	561637	
C290	LUGGAGE CPT-DOOR LOCK	AMP MNL	4	560851	560852	
C291	LUGGAGE CPT-DOOR LOCK	AMP MNL	4	560851	560852	
C292	LUGGAGE CPT-DOOR LOCK	AMP MNL	4	560851	560852	
C293	WIPER MOTOR	AMP FF	6	------	561186	
C294	UNDER DASH-WIPER SYST. FEED	AMP MNL	6	561552	561515	
C295	UNDER DASH-WIPER PULSE GEN.	AMP FF	6	------	561186	PRIOR REV 010
C296	FR SERVICE CPT-HEAD LTS	ITT SS	3	561111	561080	PRIOR REV 010
C298	FR LH HAT RACK-AMPLI	MOLEX	6	------	562464	PRIOR REV 010
C299	FR LH HAT RACK-AMPLI	MOLEX	10	------	562465	PRIOR REV 010
C300	FR LH HAT RACK-AMPLI	MOLEX	6	------	562464	
C301	FR LH HAT RACK-AMPLI	MOLEX	10	------	562465	
C302	UNDER DASH-FLASHER MODULE	AMP MNL	2	560900	560898	
C309	ENGINE DDEC III-ECM POWER	PED WP	5	------	562345	
C312	ENGINE DDEC III-ECM SIGNAL	PED WP	3	561781	561782	
C313	ENGINE DDEC III-OUTPUT	PED WP	4	562398	------	
C314	FR SERVICE CPT-PRESS SW KNEEL	PED WP	2	561566	561690	
C315	FR SERVICE CPT-KNEEL ALARM	PED WP	2	561566	561690	
C316	FR SERVICE CPT-KNEEL ALARM	AMP MNL	2	560900	560898	
C326	ENGINE DDEC III- MANUAL TR.	PED WP	4	561610	561611	
C364	FR ROOF-DESTINATION SIGN	AMP MNL	3	561667	561550	
C365	FR ROOF-DESTINATION SIGN	AMP MNL	2	560900	560898	
C368	FR ROOF-DEST. SIGN BALLAST	AMP MNL	3	561667	561550	
C369	FR ROOF-DEST. SIGN OPER. SW.	TORRIX	5	------	562110	
C370	FR ROOF-DEST. SIGN FLUOR.	AMP MNL	2	560900	560898	
C371	FR ROOF-DEST. SIGN FLUOR.	AMP MNL	2	560900	560898	
C372	FR ROOF-DEST. SIGN SPEED SW.	MOLEX	4	561477	561476	

NO.	LOCATION	TYPE	(NB) CAVITY	*PIN HOUSING	*SOCKET HOUSING	
C382	ENGINE GENERATOR 12 VAC RLY	PED WP	1	561605	561577	
C383	LH UNDER DASH-MICRO W/O WIRE	AMP MNL	2	561248	561247	PRIOR REV. 010
C384	LH UNDER DASH-MICRO W/O WIRE	AMP MNL	3	561550	561667	PRIOR REV. 010
C385	BATTERY COMPT. ACC.	AMP MNL	12	561735	561734	
C386	CONDENSER CPT-BYPASS VALVE	PED WP	2	561566	561590	
C387	EVAPORATOR CPT-BYPASS VALVE	PED WP	2	561566	561590	
C388	LH SW PANEL-MASTER SW	SWF	8	------	561107	
C389	EVAPORATOR CPT-WATER PUMP	PED WP	2	561566	561590	
C390	CONDENSER CPT.-A/C JCT BOX	DEUTSCH	24	562280	562283	
C391	CONDENSER CPT.-PRESS.SW	PED WP	2	561566	561590	
C392	CONDENSER CPT.- MOTOR FAN	PED WP	2	561566	561590	
C393	CONDENSER CPT.- MOTOR FAN	PED WP	2	561566	561590	
C394	LH OVER CONSOLE- B/U MONITOR	AMP MNL	4	560851	560852	
C395	LH OVER CONSOLE- B/U MONITOR	AMP MNL	5	------	------	
C396	CONDENSER CPT.- MOTOR FAN	PED WP	2	561566	561590	
C396	HAT RACK SPEAKER	MOLEX	4	562507	562503	
C397	CONDENSER CPT.- MOTOR FAN	PED WP	2	561566	561590	
C426	ENGINE S60 RAD. FAN CLUTCH	PED WP	3	561781	561782	
C430	DRIVER GUARD WATER HTR TIMER	AMP FF	8	561188	562363	
C450	SOUND SYS. JCT. PANEL	MOLEX	4	562507	562503	
C451	WIRELESS MICRO-FIRST CPT BAG	MOLEX	2	562550	562549	
C452	UNDER DASH INSTR. PANEL	MOLEX	2	562550	562549	
C453	SOUND SYS. JCT.PANEL-VCP	PED WP	2	561566	561590	
C454	SOUND SYS.JCT.PAN.-FILT. VCP	PED WP	2	561566	561590	
C455	WIRELESS MICRO-LH HAT-RACK	CINCH	2	562554	562551	
C456	WORLD TRANSM.-RETARDER ACCUM.	PED MP	2	------	562427	
C457	WORLD TRANSM.-MAIN CONNECTOR	DEUTSCH	31	562572	562536	
C458	WORLD TRANSM.-TURBINE SP.SENS	PED MP	2	------	562426	
C459	WORLD TRANSM.-ENGINE SP.SENS.	PED MP	2	------	562426	
C460	WORLD TRANSM.-SPEED SENSOR	ITT	2	------	562541	
C461	WORLD TRANSM.-RETARDER TEMP.	PED MP	2	561566	561590	
C462	WORLD TRANSM.-RETARD SOL."K"	PED MP	2	------	562426	
C463	WORLD TRANSM.-SENSOR CONN.	DEUTSCH	16	562570	562571	
C464	FR SERVICE CPT.-DDL CONN W.T.	PED MP	12	------	562574	
C465	LH CONSOLE-SHIFTER SELECTOR	T & BET	10	------	562429	
C466	FR SERVICE CPT.-RESIS. MOD.	PED WP	3	------	562428	
C467	FR SERVICE CPT.-RESIS. MOD.	PED WP	3	------	562428	
C468	FR SERVICE CPT.-VIM MOD. W.T.	PED MP	18	------	562573	
C470	FR SERVICE CPT.-SILENT 1000	AMP MNL	2	561248	561247	
C471	FR SERVICE CPT.-SILENT 1000	AMP MNL	2	561248	561247	
C472	FR SERVICE CPT.-SILENT 1000	PED WP	2	561566	561690	
C473	FR SERVICE CPT.-SILENT 1000	AMP MNL	3	561667	561550	
C475	FR SERVICE CPT-SPEED SIGN CON	DEUTSCH	6	------	562581	
C475M	FR SERVICE CPT-SPEED SIGN M.T	DEUTSCH	6	562583	------	
C475W	FR SERVICE CPT-SPEED SIGN W.T	DEUTSCH	6	562583	------	
C500	FR JCT PANEL-PRODRIVER	MOLEX	6	562070	562069	
C501	RH CONSOLE-PRODRIVER	PED MP	7	562433	------	
C502	DRIVER GUARD PRE-HTR SW.	SWF	8	------	561107	
C503	DRIVER GUARD PRE-HTR SW.	SWF	2	------	561837	
C504	DRIVER GUARD WEBASTO TIMER	AMP FF	8	561188	562363	
C505	DRIVER GUARD ESPAR TIMER	AMP FF	3	------	562034	
C508	RR JCT BOX-FAN CLUTCH MOD	AMP MNL	6	561552	561515	
C510	FR SERVICE CPT-RESIST.RUN LTS	PED MP	2	561566	561690	
C544	SOUND SYS.JCT.PANEL-SEET AUD.	PED WP	3	561781	561782	
CA	FR SERVICE CPT-ECU WORLD TR.	T & BET	34	------	562419	
CB	FR SERVICE CPT-ECU WORLD TR.	T & BET	34	------	562420	

CONNECTORS CODE (C) PAGE G : 2

NO.	LOCATION	TYPE	(NB) CAVITY	*PIN HOUSING	*SOCKET HOUSING

NO.	LOCATION	TYPE	(NB) CAVITY	•PIN HOUSING	•SOCKET HOUSING
C3	UNDER DASH-LH	AMP CPC	37	561645	561646
C7	FR SERVICE COMPT.-CLUTCH SW	ITT SS	3	561111	561080
C8	FR JCT PANEL VCR FEED	AMP MNL	2	561248	561247 PRIOR REV 010
C11	LH CONSOLE SW-MIRROR	AMP MNL	3	561667	561550
C12	LH CONSOLE SW-MIRROR HTR	AMP MNL	2	561248	561247
C13	LH CONSOLE SW-MIRROR	AMP MNL	6	561552	561515
C14	UNDER DASH LH-MIRROR	AMP MNL	9	561670	561669
C15	UNDER DASH RH-MIRROR	AMP MNL	9	561670	561669
C18	UNDER DASH-FIRE ALARM	AMP MNL	2	560900	560898
C19	UNDER DASH-A/C & HEAT SYST.	TC	10	561072	561110
C20	RR JCT BOX DIODES	AMP MNL	9	561670	561669
C21	LUGGAGE COMPT.-LOCK DOOR MOT.	PED	2	------	562076
C22	ENGINE COMPT.-CYCLOP LT	PED WP	2	561566	561690
C26	UNDER INSTRUMENT.-PANEL RHEO.	TC	2	561030	560997
C29	FR SERVICE COMPT.-VIM FEED	PED WP	3	561781	561782
C32	RH CONSOLE-DRV TEMP SENSOR	BURNDY	3	------	561104
C33	FRSERVICE COMPT. DDEC VSS	PED WP	2	561566	561690
C34	RH CONSOLE-DRV TEMP CTRL	BURNDY	6	------	561103
C35	RECIRULATED AIR GRIL.-SENSER	BURNDY	3	------	561104
C36	LH CONSOLE SW-CRUISE ON/OFF	SWF	8	------	561107
C37	LH CONSOLE SW-CRUISE SET	SWF	8	------	561107
C38	LH CONSOLE SW-CRUISE RESUME	SWF	8	------	561107
C41	UNDER DASH-FLASHER UNIT	TC	2	------	561940
C49	LAVATORY NIGHT LTS	AMP MNL	2	560900	560898
C50	RH CONSOLE-PAS. TEMP CTRL	BURNDY	6	------	561103
C51	RH CONSOLE SW-A/C & HEAT	SWF	8	------	561107
C52	ENGINE COMPT.-COMPRESSOR 05G	PED WP	2	561566	561690
C53	ENGINE COMPT.-COMPRESSOR 05G	PED WP	2	561566	561690
C54	ENGINE COMPT.-COMPRESSOR 05G	TC	1	560098	560697
C61	ENGINE COMPT.-FUEL FILTER	PED WP	2	561566	561690
C65	UNDER LH HAT RACK	MOLEX	4	561477	561476
C67	LH UNDER DASH-AMPLIF. RH SPK	BLAUPUNKT	2	561988	------
C68	LH UNDER DASH-AMPLIF. RH SPK	BLAUPUNKT	2	561988	------
C73	LH SW PANEL-MULTI FUNC. LEV.	AMP FF	8	561188	------
C74	LH SW PANEL-MULTI FUNC. LEV.	AMP FF	6	------	561108
C78	LUGGAGE COMPT.-DOOR LOCK 4 LH	AMP MNL	4	560851	560852
C79	LUGGAGE COMPT.-DOOR LOCK 4 RH	AMP MNL	4	560851	560852
C80	FR JCT PANEL-LUG. DOOR LOCK	AMP MNL	6	561552	561515
C81	LUGGAGE COMPT.-DOOR LOCK 1 LH	AMP MNL	4	560851	560852
C82	LUGGAGE COMPT.-DOOR LOCK 1 RH	AMP MNL	4	560851	560852
C83	UNDER DASH-FLASHER MODULE	TC	10	561072	561110
C84	UNDER DASH-A/C SYSTEM	TC	3	561091	561071
C85	LUGGAGE COMPT.-DOOR LOCK 3 RH	AMP MNL	4	560851	560852
C86	LUGGAGE COMPT.-DOOR LOCK 3 LH	AMP MNL	4	560851	560852
C88	RR END ROOF-CLEARANCE LTS	AMP MNL	2	560900	560898
C90	RR ROOF AUX. A/C THERMOST.	BURNDY	6	------	561103
C91	RR ROOF AUX. A/C TMP SENSOR	BURNDY	6	------	561104
C92	RR ROOF AUX. A/C FAN RH	TC	2	561030	560997
C93	RR ROOF AUX. A/C FAN LH	TC	2	561030	560997
C94	RR ROOF AUX. A/C FAN RES LH	AMP MNL	2	560900	560898
C95	RR ROOF AUX. A/C FAN RES RH	AMP MNL	2	560900	560898
C96	RR ROOF AUX. A/C LIQ SOL VAL	TC	2	561030	560997
C97	RR ROOF AUX. A/C SHUT SOL VAL	AMPHENOL	2	------	560412
C98	CONDENSER CPT.	ITT SS	4	561998	561999
C101	CONDENSER CPT.-A/C PRESS. SW	PED WP	2	561566	561690
C105	UNDER DASH RH-DRV LIQ SOL VL	TC	2	561030	560997
C106	UNDER DASH RH-DRV WTR VALVE	TC	2	561030	560997
C107	UNDER DASH RH-DRV HTR RH FAN	TC	2	561030	560997
C108	UNDER DASH RH-DRV HTR LH FAN	TC	2	561030	560997

CONNECTORS CODE (C) PAGE G : 1

NO.	LOCATION	TYPE	(NB) CAVITY	•PIN HOUSING	•SOCKET HOUSING
C111	LH CONSOLE SW-DRIVER'LTS	SWF	8	------	561107
C112	LH CONSOLE SW-GENERAL LTS	SWF	8	------	561107
C114	ENGINE DDEC-SPEED SIGNAL	PED WP	2	561566	561590
C115	RR JCT BOX-ENGINE ACCES.	DEUTSCH	40	562281	562284
C116	DRIVE AXLE COMPT.-AIR DRYER	PED MP	2	------	562251
C119	ENGINE COMPT.-LH LOWER LAMP	PED WP	6	561606	561607
C120	ENGINE COMPT.-LH LOWER LAMP	PED WP	6	561606	561607
C123	HAT RACK-BALLAST RH	AMP MNL	6	561552	561515
C124	HAT RACK-FLUORESCENT	AMP MNL	4	561551	561668
C125	HAT RACK-FLUORESCENT	AMP MNL	4	561551	561668
C126	HAT RACK-READING LTS	AMP MNL	2	560900	560898
C130	LH CONSOLE SW-READING LTS	SWF	8	------	561107
C131	LH CONSOLE SW-LUG.DOOR LOCK	SWF	8	------	561107
C132	LH CONSOLE SW-PAS & HOS CHIME	SWF	8	------	561107
C133	LH CONSOLE SW-JACOB OR RET.	SWF	8	------	561107
C134	LH CONSOLE SW-GALLEY	SWF	8	------	561107
C135	LH SW PANEL-ETHER	SWF	8	------	561107
C136	LH CONSOLE SW-MIRROR HTR	SWF	8	------	561107
C137	RH SW PANEL-HEAD LAMP	SWF	8	------	561107
C138	RH SW PANEL-SPARE	SWF	8	------	561107
C139	RH SW PANEL-FOG LAMP	SWF	8	------	561107
C140	FR JCT PANEL-BAT. HI/LO	AMP MNL	2	560900	560898
C141	ENGINE COMPT.-B/UP ALARM	PED WP	2	561566	561590
C142	FR SERVICE CPT-LH MARKER LTS	ITT SS	3	561111	561080
C143	RR LH HAT RACK-FEEDING	AMP MNL	9	561661	561662
C144	RR RH HAT RACK-FEEDING	AMP MNL	9	561661	561662
C145	RH HAT RACK-BALLAST	AMP MNL	4	560851	560852
C146	FR SERVICE CPT-RH MARKER LTS	ITT SS	3	561111	561080
C147	RR ROOF LH-EMERGENCY EXIT LTS	AMP MNL	2	560900	560898
C148	RR ROOF RH-EMERGENCY EXIT LTS	AMP MNL	2	560900	560898
C149	LH HAT RACK-BALLAST	AMP MNL	4	560851	560852
C150	FR RH HAT RACK-110V FLUOR	AMP MNL	2	561248	561247
C151	FR LH HAT RACK-110V FLUOR	AMP MNL	2	561248	561247
C152	LH HAT RACK-GENERAL LTS	AMP MNL	3	561667	561550
C153	RH HAT RACK-GENERAL LTS	AMP MNL	3	561667	561550
C154	RH SW PANEL-HAZARD	SWF	8	------	561107
C155	LH SW PANEL-FAST IDLE	SWF	8	------	561107
C156	LH SW PANEL-STP ENG. OVER.	SWF	8	------	561107
C158	RR ROOF AUX. A/C FEEDING	AMP MNL	3	561667	561550
C160	FR SERVICE CPT-INTERFACE	AMP CPC	37	561644	561646
C161	ENGINE DDEC III-ECM	PED	30	------	561600
C162	ENGINE DDEC III-ACCESSORIES	PED WP	4	561610	561611
C163	ENGINE CPT-COOLANT PROBE	PED MP	2	------	562350
C164	FR SERVICE JCT BOX	AMP CPC	22	561709	561710
C165	FR SERVICE JCT BOX	AMP CPC	16	561693	561695
C166	UNDER INSTRUMENT PANEL	AMP CPC	16	561639	561640
C167	FR SERVICE CPT-EL. FOOT PEDAL	PED WP	3	561781	561782
C168	FR SERVICE CPT-DDR	DEUTSCH	6	562360	------
C169	FR SERVICE CPT-WORLD TR. VIW	AMP CPC	16	561638	561640
C172	ENGINE COMPT-WATER TANK HEAT.	PED WP	2	561566	561690
C173	LAV.PORTABLE-WATER TANK HEAT.	AMP MNL	2	560900	560898
C175	FR SERV CPT-KNEELING FEEDING	PED WP	3	561781	561782
C177	GALLEY-REFRIGERATOR	AMP MNL	2	561248	561247

NO.	LOCATION	TYPE	(NB) CAVITY	•PIN HOUSING	•SOCKET HOUSING	
C179	RH HAT RACK-110V MONITOR	MOLEX	4	561477	561476	PRIOR REV. 010
C180	FR SERV CPT-KNEEL. DIODE	AMP MNL	9	561670	561699	
C181	FR SERV CPT-KNEELING MODULE	AMP MNL	12	561735	561734	
C182	FR SERVICE CPT-SPEED SW	AMP HDP	15	------	562012	
C184	FR SERV CPT-KNEEL. MOD. CTRL	AMP MNL	3	------	561550	
C184	FR AXLE-KNEELING PROXIMITY SW	AMP MNL	3	561667	561550	
C185	FR SERV CPT-KNEEL. MOD. EXH.	AMP MNL	3	------	561550	
C187	FR SERV CPT-KNEEL. MOD. BRK	AMP MNL	3	------	561550	
C187	FR SERVICE JCT BOX-RESISTORS	AMP MNL	6	561552	561515	
C188	LH CONSOLE SW-KNEELING	SWF	8	------	561107	
C190	FR SERVICE CPT.-WORLD TR VIM	PED WP	30	------	561600	
C192	GALLEY-FEEDING	AMP CPC	3	561862	561847	
C194	GALLEY SW-CONTAINER RH	SWF	8	------	561107	
C195	GALLEY SW-CONTAINER LH	SWF	8	------	561107	
C199	FR SERV. JCT BOX-SERVICE BRK	AMP MNL	3	561667	561550	
C200	LH CONSOLE SW-24V FLUOR	SWF	8	------	561107	
C201	UNDER INSTRUMENT PANEL	AMP MNL	2	560900	560898	PRIOR REV. 010
C202	UNDER INSTRUMENT PANEL	AMP CPC	9	561636	561637	
C205	LH UNDER DASH-AMPLIF. LH SPK	BLAUPUNKT	2	561988	------	
C206	RH CONSOLE-FR DEFROSTER	TC	2	561030	560997	
C207	RH CONSOLE-DRV RHEOSTAT	AMP MNL	6	561552	561515	
C208	UNDER DASH-DRV HTR MODULE	AMP MNL	9	561670	561669	
C209	UNDER DASH-DRV HTR MODULE	AMP MNL	9	561670	561669	
C210	LH UNDER DASH-AMPLIF. LH SPK	BLAUPUNKT	2	561988	------	
C211	RH CONSOLE-VCR VOLUME	AMP MNL	4	561551	561668	PRIOR REV. 010
C212	LH CONSOLE SW-VCR VIDEO	SWF	8	------	561107	PRIOR REV. 010
C213	FR ROOF-CLEARANCE LT	AMP MNL	2	560900	560898	
C214	UNDER DASH PANEL-TACHOGRAPH	V.D.O.	8	------	562041	
C215	UNDER DASH PANEL-TACHOGRAPH	V.D.O.	8	------	562043	
C216	UNDER DASH PANEL-TACHOGRAPH	AMP MNL	4	560851	560852	
C217	FR LH HAT RACK-SPEAKER	AMP MNL	4	561659	561660	
C218	FR RH HAT RACK-SPEAKER	AMP MNL	4	561659	561660	
C219	DASH RHEOSTAT-P.A. VOLUME	MOLEX	4	561477	561476	PRIOR REV. 010
C220	LH UNDER DASH-P.A. VOLUME	AMP MNL	3	561667	561550	PRIOR REV. 010
C221	LH UNDER DASH-AMPLIFIER FEED	AMP MNL	3	561550	561667	PRIOR REV. 010
C222	LH UNDER DASH-P.A. RADIO	AMP MNL	9	561670	561669	PRIOR REV. 010
C223	LH UNDER DASH-P.A. RADIO	AMP MNL	9	561670	561669	PRIOR REV. 010
C224	LH UNDER DASH-PA & RADIO FEED	AMP MNL	6	561552	561515	PRIOR REV. 010
C225	LH UNDER DASH-PA MICRO OUTLET	AMP MNL	3	561667	561550	PRIOR REV. 010
C226	LH UNDER DASH-PA MICRO OUTLET	AMP MNL	3	561667	561550	PRIOR REV. 010
C227	RH CONSOLE-SPEAKER CONTROL SW	SWF	8	------	561107	PRIOR REV. 010
C229	LH UNDER DASH-PA DRV SPEAKERS	AMP MNL	4	561551	561668	PRIOR REV. 010
C230	ENG.CPT.-FUEL PRIME PUMP SW.	PED WP	2	561566	561690	
C231	ENG.CPT.-FUEL PRIME PUMP	PED WP	2	561566	561690	
C232	UNDER L.H. CONSOLE	MOLEX	4	561477	561476	PRIOR REV. 010
C233	MICRO OUTLET SOCKET	MOLEX	4	561477	561476	PRIOR REV. 010
C234	UNDER INSTRUMENT PANEL-VDO	AMP MNL	4	560851	560852	PRIOR REV. 010
C234	UNDER INSTRUMENT PANEL-VDO	AMP FF	8	------	562363	
C235	UNDER INSTRUMENT PANEL-VDO	AMP MNL	4	560851	560852	PRIOR REV. 010
C235	UNDER INSTRUMENT PANEL-VDO	AMP FF	8	------	562363	
C236	FR SERVICE CPT CENTER-ABS	AMP CPC	14	561585	561583	
C237	FR AXLE CPT-ABS RH SENSOR	WABCO	2	641132	------	
C238	FR AXLE CPT-ABS RH VALVE	WABCO	3	------	641098	
C239	FR AXLE CPT-ABS LH VALVE	WABCO	3	------	641098	
C240	FR AXLE CPT-ABS LH SENSOR	WABCO	2	641132	------	
C241	DRIVE AXLE CPT-ABS	PED WP	6	561606	561607	
C242	DRIVE AXLE CPT-ABS LH SENSOR	DEUTSCH	2	562486	562485	

CONNECTORS CODE (C) PAGE G : 2

NO.	LOCATION	TYPE	(NB) CAVITY	•PIN HOUSING	•SOCKET HOUSING	
C243	DRIVE AXLE CPT-ABS LH VALVE	WABCO	3	------	641098	
C244	DRIVE AXLE CPT-ABS RH VALVE	WABCO	3	------	641098	
C245	DRIVE AXLE CPT-ABS RH SENSOR	WABCO	2	641132	------	PROIR S570
C245	DRIVE AXLE CPT-ABS RH SENSOR	DEUTSCH	2	562486	562485	EFF. W/S570
C246	DRIVE AXLE CPT-ABS SPARE	PED WP	4	561610	561611	
C247	FR SERVICE CPT-ABS MODULE	WABCO	35	------	561094	
C248	DRIVE AXLE CPT-ABS	PED WP	6	561606	561607	
C249	FR SERVICE CPT-ABS/DDEC	PED WP	2	561566	561690	
C250	RH SW PANEL-B/UP CANCEL	SWF	8	------	561107	
C251	RH SW PANEL-SEAT HTR	SWF	8	------	561107	
C252	LH SW PANEL-SWITCH LT	SWF	2	------	561837	
C254	FR SERVICE JCT BOX-ABS	AMP CPC	16	561693	561695	
C255	RH CONSOLE-RADIO	AMP MNL	9	561670	561669	PRIOR REV 010
C257	ENGINE COMPT-WATER HEATER	AMP FF	6	------	561186	
C258	DRIVER GUARD WATER HTR TIMER	AMP FF	8	561188	562363	
C259	ENGINE COMPT-WATER HEATER	TC	2	561597	------	
C260	ENGINE COMPT-WATER HEATER	TC	1	561073	------	
C261	ENGINE COMPT-WATER HEATER	TC	2	561597	------	
C266	BATTERY COMPT. LTS	AMP MNL	2	561248	561247	
C267	LUGGAGE COMPT. LTS - 1	AMP MNL	2	561248	561247	
C268	LUGGAGE COMPT. LTS - 2	AMP MNL	2	561248	561247	
C269	LUGGAGE COMPT. LTS - 3 RH	AMP MNL	2	561248	561247	
C270	LUGGAGE COMPT. LTS - 3 LH	AMP MNL	2	561248	561247	
C271	LUGGAGE COMPT. LTS - 4	AMP MNL	2	561248	561247	
C272	FR SERVICE CPT LTS	AMP MNL	2	561248	561247	
C274	FR JCT PANEL-DIODES	AMP MNL	15	561987	561986	
C276	FR JCT PANEL-ALARM BUZZER	BOSCH	5	------	561183	
C281	LH CONSOLE- FR. DEST. SIGN	SWF	2	------	561837	
C282	FR. ROOF- DEST. SIGN	AMP CPC	9	561636	561637	
C290	LUGGAGE CPT-DOOR LOCK	AMP MNL	4	560851	560852	
C291	LUGGAGE CPT-DOOR LOCK	AMP MNL	4	560851	560852	
C292	LUGGAGE CPT-DOOR LOCK	AMP MNL	4	560851	560852	
C293	WIPER MOTOR	AMP FF	6	------	561186	
C294	UNDER DASH-WIPER SYST. FEED	AMP MNL	6	561552	561515	
C295	UNDER DASH-WIPER PULSE GEN.	AMP FF	6	------	561186	PRIOR REV 010
C296	FR SERVICE CPT-HEAD LTS	ITT SS	3	561111	561080	PRIOR REV 010
C298	FR LH HAT RACK-AMPLI	MOLEX	6	------	562464	PRIOR REV 010
C299	FR LH HAT RACK-AMPLI	MOLEX	10	------	562465	PRIOR REV 010
C300	FR LH HAT RACK-AMPLI	MOLEX	6	------	562464	
C301	FR LH HAT RACK-AMPLI	MOLEX	10	------	562465	
C302	UNDER DASH-FLASHER MODULE	AMP MNL	2	560900	560898	
C309	ENGINE DDEC III-ECM POWER	PED WP	5	------	562345	
C312	ENGINE DDEC III-ECM SIGNAL	PED WP	3	561781	561782	
C313	ENGINE DDEC III-OUTPUT	PED WP	4	562398	------	
C314	FR SERVICE CPT-PRESS SW KNEEL	PED WP	2	561566	561690	
C315	FR SERVICE CPT-KNEEL ALARM	PED WP	2	561566	561690	
C316	FR SERVICE CPT-KNEEL ALARM	AMP MNL	2	560900	560898	
C326	ENGINE DDEC III- MANUAL TR.	PED WP	4	561610	561611	
C364	FR ROOF-DESTINATION SIGN	AMP MNL	3	561667	561550	
C365	FR ROOF-DESTINATION SIGN	AMP MNL	2	560900	560898	
C368	FR ROOF-DEST. SIGN BALLAST	AMP MNL	3	561667	561550	
C369	FR ROOF-DEST. SIGN OPER. SW.	TORRIX	5	------	562110	
C370	FR ROOF-DEST. SIGN FLUOR.	AMP MNL	2	560900	560898	
C371	FR ROOF-DEST. SIGN FLUOR.	AMP MNL	2	560900	560898	
C372	FR ROOF-DEST. SIGN SPEED SW.	MOLEX	4	561477	561476	

NO.	LOCATION	TYPE	(NB) CAVITY	•PIN HOUSING	•SOCKET HOUSING	
C382	ENGINE GENERATOR 12 VAC RLY	PED WP	1	561605	561577	
C383	LH UNDER DASH-MICRO W/O WIRE	AMP MNL	2	561248	561247	PRIOR REV. 010
C384	LH UNDER DASH-MICRO W/O WIRE	AMP MNL	3	561550	561667	PRIOR REV. 010
C385	BATTERY COMPT. ACC.	AMP MNL	12	561735	561734	
C386	CONDENSER CPT-BYPASS VALVE	PED WP	2	561566	561590	
C387	EVAPORATOR CPT-BYPASS VALVE	PED WP	2	561566	561590	
C388	LH SW PANEL-MASTER SW	SWF	8	------	561107	
C389	EVAPORATOR CPT-WATER PUMP	PED WP	2	561566	561590	
C390	CONDENSER CPT.-A/C JCT BOX	DEUTSCH	24	562280	562283	
C391	CONDENSER CPT.-PRESS.SW	PED WP	2	561566	561590	
C392	CONDENSER CPT.- MOTOR FAN	PED WP	2	561566	561590	
C393	CONDENSER CPT.- MOTOR FAN	PED WP	2	561566	561590	
C394	LH OVER CONSOLE- B/U MONITOR	AMP MNL	4	560851	560852	
C395	LH OVER CONSOLE- B/U MONITOR	AMP MNL	5	------	------	
C396	CONDENSER CPT.- MOTOR FAN	PED WP	2	561566	561590	
C396	HAT RACK SPEAKER	MOLEX	4	562507	562503	
C397	CONDENSER CPT.- MOTOR FAN	PED WP	2	561566	561590	
C421	ENGINE CPT. WEBASTO WATER HTR	AMP FF	2	562474	562473	
C422	ENGINE CPT. WEBASTO WATER HTR	PED	2	562644	561597	
C426	ENGINE S60 RAD. FAN CLUTCH	PED WP	3	561781	561782	
C430	DRIVER GUARD WATER HTR TIMER	AMP FF	8	561188	562363	
C450	SOUND SYS. JCT. PANEL	MOLEX	4	562507	562503	
C451	WIRELESS MICRO-FIRST CPT BAG	MOLEX	2	562550	562549	
C452	UNDER DASH INSTR. PANEL	MOLEX	2	562550	562549	
C453	SOUND SYS. JCT.PANEL-VCP	PED WP	2	561566	561590	
C454	SOUND SYS.JCT.PAN.-FILT. VCP	PED WP	2	561566	561590	
C455	WIRELESS MICRO-LH HAT-RACK	CINCH	2	562554	562551	
C456	WORLD TRANSM.-RETARDER ACCUM.	PED MP	2	------	562427	
C457	WORLD TRANSM.-MAIN CONNECTOR	DEUTSCH	31	562572	562536	
C458	WORLD TRANSM.-TURBINE SP.SENS	PED MP	2	------	562426	
C459	WORLD TRANSM.-ENGINE SP.SENS.	PED MP	2	------	562426	
C460	WORLD TRANSM.-SPEED SENSOR	ITT	2	------	562541	
C461	WORLD TRANSM.-RETARDER TEMP.	PED MP	2	561566	561590	
C462	WORLD TRANSM.-RETARD SOL."K"	PED MP	2	------	562426	
C463	WORLD TRANSM.-SENSOR CONN.	DEUTSCH	16	562570	562571	
C464	FR SERVICE CPT.-DDL CONN W.T.	PED MP	12	------	562574	
C465	LH CONSOLE-SHIFTER SELECTOR	T & BET	10	------	562429	
C466	FR SERVICE CPT.-RESIS. MOD.	PED WP	3	------	562428	
C467	FR SERVICE CPT.-RESIS. MOD.	PED WP	3	------	562428	
C468	FR SERVICE CPT.-VIM MOD. W.T.	PED MP	18	------	562573	
C470	FR SERVICE CPT.-SILENT 1000	AMP MNL	2	561248	561247	
C471	FR SERVICE CPT.-SILENT 1000	AMP MNL	2	561248	561247	
C472	FR SERVICE CPT.-SILENT 1000	PED WP	2	561566	561690	
C473	FR SERVICE CPT.-SILENT 1000	AMP MNL	3	561667	561550	
C475	FR SERVICE CPT-SPEED SIGN CON	DEUTSCH	6	------	562581	
C475M	FR SERVICE CPT-SPEED SIGN M.T	DEUTSCH	6	562583	------	
C475W	FR SERVICE CPT-SPEED SIGN W.T	DEUTSCH	6	562583	------	
C500	FR JCT PANEL-PRODRIVER	MOLEX	6	562070	562069	
C501	RH CONSOLE-PRODRIVER	PED MP	7	562433	------	
C502	DRIVER GUARD PRE-HTR SW.	SWF	8	------	561107	
C503	DRIVER GUARD PRE-HTR SW.	SWF	2	------	561837	
C504	DRIVER GUARD WEBASTO TIMER	AMP FF	8	561188	562363	
C505	DRIVER GUARD ESPAR TIMER	AMP FF	3	------	562034	
C508	RR JCT BOX-FAN CLUTCH MOD	AMP MNL	6	561552	561515	
C510	FR SERVICE CPT-RESIST.RUN LTS	PED MP	2	561566	561690	
C544	SOUND SYS.JCT.PANEL-SEET AUD.	PED WP	3	561781	561782	
CA	FR SERVICE CPT-ECU WORLD TR.	T & BET	34	------	562419	
CB	FR SERVICE CPT-ECU WORLD TR.	T & BET	34	------	562420	

CONNECTORS CODE (C) PAGE G : 2

NO.	LOCATION	TYPE	(NB) CAVITY	•PIN HOUSING	•SOCKET HOUSING
C541	SOUND SYS.JCT.PANEL-AUDIO SEAT SYS.	PED WP	2	561566	561690
C542	LH HAT RACK-AUDIO SEAT SYSTEM	AMP MNL	2	561667	561550
C545	LH HAT RACK-AUDIO SEAT SYSTEM	AMP MNL	2	561667	561550
WEB1	ENGINE CPT. WEBASTO WATER HTR	AMP FF	2	562474	562643
WEB2	ENGINE CPT. WEBASTO WATER HTR	AMP FF	2	562474	562643

NO.	LOCATION	TYPE	(NB) CAVITY	*PIN HOUSING	*SOCKET HOUSING
C3	UNDER DASH-LH	AMP CPC	37	561645	561646
C7	FR SERVICE COMPT.-CLUTCH SW	ITT SS	3	561111	561080
C8	FR JCT PANEL VCR FEED	AMP MNL	2	561248	561247 PRIOR REV 010
C11	LH CONSOLE SW-MIRROR	AMP MNL	3	561667	561550
C12	LH CONSOLE SW-MIRROR HTR	AMP MNL	2	561248	561247
C13	LH CONSOLE SW-MIRROR	AMP MNL	6	561552	561515
C14	UNDER DASH LH-MIRROR	AMP MNL	9	561670	561669
C15	UNDER DASH RH-MIRROR	AMP MNL	9	561670	561669
C18	UNDER DASH-FIRE ALARM	AMP MNL	2	560900	560898
C19	UNDER DASH-A/C & HEAT SYST.	TC	10	561072	561110
C20	RR JCT BOX DIODES	AMP MNL	9	561670	561669
C21	LUGGAGE COMPT.-LOCK DOOR MOT.	PED	2	------	562076
C22	ENGINE COMPT.-CYCLOP LT	PED WP	2	561566	561690
C26	UNDER INSTRUMENT.-PANEL RHEO.	TC	2	561030	560997
C29	FR SERVICE COMPT.-VIM FEED	PED WP	3	561781	561782
C32	RH CONSOLE-DRV TEMP SENSOR	BURNDY	3	------	561104
C33	FRSERVICE COMPT. DDEC VSS	PED WP	2	561566	561690
C34	RH CONSOLE-DRV TEMP CTRL	BURNDY	6	------	561103
C35	RECIRULATED AIR GRIL.-SENSER	BURNDY	3	------	561104
C36	LH CONSOLE SW-CRUISE ON/OFF	SWF	8	------	561107
C37	LH CONSOLE SW-CRUISE SET	SWF	8	------	561107
C38	LH CONSOLE SW-CRUISE RESUME	SWF	8	------	561107
C41	UNDER DASH-FLASHER UNIT	TC	2	------	561940
C49	LAVATORY NIGHT LTS	AMP MNL	2	560900	560898
C50	RH CONSOLE-PAS. TEMP CTRL	BURNDY	6	------	561103
C51	RH CONSOLE SW-A/C & HEAT	SWF	8	------	561107
C52	ENGINE COMPT.-COMPRESSOR 05G	PED WP	2	561566	561690
C53	ENGINE COMPT.-COMPRESSOR 05G	PED WP	2	561566	561690
C54	ENGINE COMPT.-COMPRESSOR 05G	TC	1	560098	560697
C61	ENGINE COMPT.-FUEL FILTER	PED WP	2	561566	561690
C65	UNDER LH HAT RACK	MOLEX	4	561477	561476
C67	LH UNDER DASH-AMPLIF. RH SPK	BLAUPUNKT	2	561988	------
C68	LH UNDER DASH-AMPLIF. RH SPK	BLAUPUNKT	2	561988	------
C73	LH SW PANEL-MULTI FUNC. LEV.	AMP FF	8	561188	------
C74	LH SW PANEL-MULTI FUNC. LEV.	AMP FF	6	------	561108
C78	LUGGAGE COMPT.-DOOR LOCK 4 LH	AMP MNL	4	560851	560852
C79	LUGGAGE COMPT.-DOOR LOCK 4 RH	AMP MNL	4	560851	560852
C80	FR JCT PANEL-LUG. DOOR LOCK	AMP MNL	6	561552	561515
C81	LUGGAGE COMPT.-DOOR LOCK 1 LH	AMP MNL	4	560851	560852
C82	LUGGAGE COMPT.-DOOR LOCK 1 RH	AMP MNL	4	560851	560852
C83	UNDER DASH-FLASHER MODULE	TC	10	561072	561110
C84	UNDER DASH-A/C SYSTEM	TC	3	561091	561071
C85	LUGGAGE COMPT.-DOOR LOCK 3 RH	AMP MNL	4	560851	560852
C86	LUGGAGE COMPT.-DOOR LOCK 3 LH	AMP MNL	4	560851	560852
C88	RR END ROOF-CLEARANCE LTS	AMP MNL	2	560900	560898
C90	RR ROOF AUX. A/C THERMOST.	BURNDY	6	------	561103
C91	RR ROOF AUX. A/C TMP SENSOR	BURNDY	6	------	561104
C92	RR ROOF AUX. A/C FAN RH	TC	2	561030	560997
C93	RR ROOF AUX. A/C FAN LH	TC	2	561030	560997
C94	RR ROOF AUX. A/C FAN RES LH	AMP MNL	2	560900	560898
C95	RR ROOF AUX. A/C FAN RES RH	AMP MNL	2	560900	560898
C96	RR ROOF AUX. A/C LIQ SOL VAL	TC	2	561030	560997
C97	RR ROOF AUX. A/C SHUT SOL VAL	AMPHENOL	2	------	560412
C98	CONDENSER CPT.	ITT SS	4	561998	561999
C101	CONDENSER CPT.-A/C PRESS. SW	PED WP	2	561566	561690
C105	UNDER DASH RH-DRV LIQ SOL VL	TC	2	561030	560997
C106	UNDER DASH RH-DRV WTR VALVE	TC	2	561030	560997
C107	UNDER DASH RH-DRV HTR RH FAN	TC	2	561030	560997
C108	UNDER DASH RH-DRV HTR LH FAN	TC	2	561030	560997

CONNECTORS CODE (C) PAGE G : 1

NO.	LOCATION	TYPE	(NB) CAVITY	*PIN HOUSING	*SOCKET HOUSING
C111	LH CONSOLE SW-DRIVER'LTS	SWF	8	------	561107
C112	LH CONSOLE SW-GENERAL LTS	SWF	8	------	561107
C114	ENGINE DDEC-SPEED SIGNAL	PED WP	2	561566	561590
C115	RR JCT BOX-ENGINE ACCES.	DEUTSCH	40	562281	562284
C116	DRIVE AXLE COMPT.-AIR DRYER	PED MP	2	------	562251
C119	ENGINE COMPT.-LH LOWER LAMP	PED WP	6	561606	561607
C120	ENGINE COMPT.-LH LOWER LAMP	PED WP	6	561606	561607
C123	HAT RACK-BALLAST RH	AMP MNL	6	561552	561515
C124	HAT RACK-FLUORESCENT	AMP MNL	4	561551	561668
C125	HAT RACK-FLUORESCENT	AMP MNL	4	561551	561668
C126	HAT RACK-READING LTS	AMP MNL	2	560900	560898
C130	LH CONSOLE SW-READING LTS	SWF	8	------	561107
C131	LH CONSOLE SW-LUG.DOOR LOCK	SWF	8	------	561107
C132	LH CONSOLE SW-PAS & HOS CHIME	SWF	8	------	561107
C133	LH CONSOLE SW-JACOB OR RET.	SWF	8	------	561107
C134	LH CONSOLE SW-GALLEY	SWF	8	------	561107
C135	LH SW PANEL-ETHER	SWF	8	------	561107
C136	LH CONSOLE SW-MIRROR HTR	SWF	8	------	561107
C137	RH SW PANEL-HEAD LAMP	SWF	8	------	561107
C138	RH SW PANEL-SPARE	SWF	8	------	561107
C139	RH SW PANEL-FOG LAMP	SWF	8	------	561107
C140	FR JCT PANEL-BAT. HI/LO	AMP MNL	2	560900	560898
C141	ENGINE COMPT.-B/UP ALARM	PED WP	2	561566	561590
C142	FR SERVICE CPT-LH MARKER LTS	ITT SS	3	561111	561080
C143	RR LH HAT RACK-FEEDING	AMP MNL	9	561661	561662
C144	RR RH HAT RACK-FEEDING	AMP MNL	9	561661	561662
C145	RH HAT RACK-BALLAST	AMP MNL	4	560851	560852
C146	FR SERVICE CPT-RH MARKER LTS	ITT SS	3	561111	561080
C147	RR ROOF LH-EMERGENCY EXIT LTS	AMP MNL	2	560900	560898
C148	RR ROOF RH-EMERGENCY EXIT LTS	AMP MNL	2	560900	560898
C149	LH HAT RACK-BALLAST	AMP MNL	4	560851	560852
C150	FR RH HAT RACK-110V FLUOR	AMP MNL	2	561248	561247
C151	FR LH HAT RACK-110V FLUOR	AMP MNL	2	561248	561247
C152	LH HAT RACK-GENERAL LTS	AMP MNL	3	561667	561550
C153	RH HAT RACK-GENERAL LTS	AMP MNL	3	561667	561550
C154	RH SW PANEL-HAZARD	SWF	8	------	561107
C155	LH SW PANEL-FAST IDLE	SWF	8	------	561107
C156	LH SW PANEL-STP ENG. OVER.	SWF	8	------	561107
C158	RR ROOF AUX. A/C FEEDING	AMP MNL	3	561667	561550
C160	FR SERVICE CPT-INTERFACE	AMP CPC	37	561644	561646
C161	ENGINE DDEC III-ECM	PED	30	------	561600
C162	ENGINE DDEC III-ACCESSORIES	PED WP	4	561610	561611
C163	ENGINE CPT-COOLANT PROBE	PED MP	2	------	562350
C164	FR SERVICE JCT BOX	AMP CPC	22	561709	561710
C165	FR SERVICE JCT BOX	AMP CPC	16	561693	561695
C166	UNDER INSTRUMENT PANEL	AMP CPC	16	561639	561640
C167	FR SERVICE CPT-EL. FOOT PEDAL	PED WP	3	561781	561782
C168	FR SERVICE CPT-DDR	DEUTSCH	6	562360	------
C169	FR SERVICE CPT-WORLD TR. VIW	AMP CPC	16	561638	561640
C172	ENGINE COMPT-WATER TANK HEAT.	PED WP	2	561566	561690
C173	LAV.PORTABLE-WATER TANK HEAT.	AMP MNL	2	560900	560898
C175	FR SERV CPT-KNEELING FEEDING	PED WP	3	561781	561782
C177	GALLEY-REFRIGERATOR	AMP MNL	2	561248	561247

NO.	LOCATION	TYPE	(NB) CAVITY	*PIN HOUSING	*SOCKET HOUSING	
C179	RH HAT RACK-110V MONITOR	MOLEX	4	561477	561476	PRIOR REV. 010
C180	FR SERV CPT-KNEEL. DIODE	AMP MNL	9	561670	561699	
C181	FR SERV CPT-KNEELING MODULE	AMP MNL	12	561735	561734	
C182	FR SERVICE CPT-SPEED SW	AMP HDP	15	------	562012	
C184	FR SERV CPT-KNEEL. MOD. CTRL	AMP MNL	3	------	561550	
C184	FR AXLE-KNEELING PROXIMITY SW	AMP MNL	3	561667	561550	
C185	FR SERV CPT-KNEEL. MOD. EXH.	AMP MNL	3	------	561550	
C187	FR SERV CPT-KNEEL. MOD. BRK	AMP MNL	3	------	561550	
C187	FR SERVICE JCT BOX-RESISTORS	AMP MNL	6	561552	561515	
C188	LH CONSOLE SW-KNEELING	SWF	8	------	561107	
C190	FR SERVICE CPT.-WORLD TR VIM	PED WP	30	------	561600	
C192	GALLEY-FEEDING	AMP CPC	3	561862	561847	
C194	GALLEY SW-CONTAINER RH	SWF	8	------	561107	
C195	GALLEY SW-CONTAINER LH	SWF	8	------	561107	
C199	FR SERV. JCT BOX-SERVICE BRK	AMP MNL	3	561667	561550	
C200	LH CONSOLE SW-24V FLUOR	SWF	8	------	561107	
C201	UNDER INSTRUMENT PANEL	AMP MNL	2	560900	560898	PRIOR REV. 010
C202	UNDER INSTRUMENT PANEL	AMP CPC	9	561636	561637	
C205	LH UNDER DASH-AMPLIF. LH SPK	BLAUPUNKT	2	561988	------	
C206	RH CONSOLE-FR DEFROSTER	TC	2	561030	560997	
C207	RH CONSOLE-DRV RHEOSTAT	AMP MNL	6	561552	561515	
C208	UNDER DASH-DRV HTR MODULE	AMP MNL	9	561670	561669	
C209	UNDER DASH-DRV HTR MODULE	AMP MNL	9	561670	561669	
C210	LH UNDER DASH-AMPLIF. LH SPK	BLAUPUNKT	2	561988	------	
C211	RH CONSOLE-VCR VOLUME	AMP MNL	4	561551	561668	PRIOR REV. 010
C212	LH CONSOLE SW-VCR VIDEO	SWF	8	------	561107	PRIOR REV. 010
C213	FR ROOF-CLEARANCE LT	AMP MNL	2	560900	560898	
C214	UNDER DASH PANEL-TACHOGRAPH	V.D.O.	8	------	562041	
C215	UNDER DASH PANEL-TACHOGRAPH	V.D.O.	8	------	562043	
C216	UNDER DASH PANEL-TACHOGRAPH	AMP MNL	4	560851	560852	
C217	FR LH HAT RACK-SPEAKER	AMP MNL	4	561659	561660	
C218	FR RH HAT RACK-SPEAKER	AMP MNL	4	561659	561660	
C219	DASH RHEOSTAT-P.A. VOLUME	MOLEX	4	561477	561476	PRIOR REV. 010
C220	LH UNDER DASH-P.A. VOLUME	AMP MNL	3	561667	561550	PRIOR REV. 010
C221	LH UNDER DASH-AMPLIFIER FEED	AMP MNL	3	561550	561667	PRIOR REV. 010
C222	LH UNDER DASH-P.A. RADIO	AMP MNL	9	561670	561669	PRIOR REV. 010
C223	LH UNDER DASH-P.A. RADIO	AMP MNL	9	561670	561669	PRIOR REV. 010
C224	LH UNDER DASH-PA & RADIO FEED	AMP MNL	6	561552	561515	PRIOR REV. 010
C225	LH UNDER DASH-PA MICRO OUTLET	AMP MNL	3	561667	561550	PRIOR REV. 010
C226	LH UNDER DASH-PA MICRO OUTLET	AMP MNL	3	561667	561550	PRIOR REV. 010
C227	RH CONSOLE-SPEAKER CONTROL SW	SWF	8	------	561107	PRIOR REV. 010
C229	LH UNDER DASH-PA DRV SPEAKERS	AMP MNL	4	561551	561668	PRIOR REV. 010
C230	ENG.CPT.-FUEL PRIME PUMP SW.	PED WP	2	561566	561690	
C231	ENG.CPT.-FUEL PRIME PUMP	PED WP	2	561566	561690	
C232	UNDER L.H. CONSOLE	MOLEX	4	561477	561476	PRIOR REV. 010
C233	MICRO OUTLET SOCKET	MOLEX	4	561477	561476	PRIOR REV. 010
C234	UNDER INSTRUMENT PANEL-VDO	AMP MNL	4	560851	560852	PRIOR REV. 010
C234	UNDER INSTRUMENT PANEL-VDO	AMP FF	8	------	562363	
C235	UNDER INSTRUMENT PANEL-VDO	AMP MNL	4	560851	560852	PRIOR REV. 010
C235	UNDER INSTRUMENT PANEL-VDO	AMP FF	8	------	562363	
C236	FR SERVICE CPT CENTER-ABS	AMP CPC	14	561585	561583	
C237	FR AXLE CPT-ABS RH SENSOR	WABCO	2	641132	------	
C238	FR AXLE CPT-ABS RH VALVE	WABCO	3	------	641098	
C239	FR AXLE CPT-ABS LH VALVE	WABCO	3	------	641098	
C240	FR AXLE CPT-ABS LH SENSOR	WABCO	2	641132	------	
C241	DRIVE AXLE CPT-ABS	PED WP	6	561606	561607	
C242	DRIVE AXLE CPT-ABS LH SENSOR	DEUTSCH	2	562486	562485	

CONNECTORS CODE (C) PAGE G : 2

NO.	LOCATION	TYPE	(NB) CAVITY	*PIN HOUSING	*SOCKET HOUSING	
C243	DRIVE AXLE CPT-ABS LH VALVE	WABCO	3	------	641098	
C244	DRIVE AXLE CPT-ABS RH VALVE	WABCO	3	------	641098	
C245	DRIVE AXLE CPT-ABS RH SENSOR	WABCO	2	641132	------	PROIR S570
C245	DRIVE AXLE CPT-ABS RH SENSOR	DEUTSCH	2	562486	562485	EFF. W/S570
C246	DRIVE AXLE CPT-ABS SPARE	PED WP	4	561610	561611	
C247	FR SERVICE CPT-ABS MODULE	WABCO	35	------	561094	
C248	DRIVE AXLE CPT-ABS	PED WP	6	561606	561607	
C249	FR SERVICE CPT-ABS/DDEC	PED WP	2	561566	561690	
C250	RH SW PANEL-B/UP CANCEL	SWF	8	------	561107	
C251	RH SW PANEL-SEAT HTR	SWF	8	------	561107	
C252	LH SW PANEL-SWITCH LT	SWF	2	------	561837	
C254	FR SERVICE JCT BOX-ABS	AMP CPC	16	561693	561695	
C255	RH CONSOLE-RADIO	AMP MNL	9	561670	561669	PRIOR REV 010
C257	ENGINE COMPT-WATER HEATER	AMP FF	6	------	561186	
C258	DRIVER GUARD WATER HTR TIMER	AMP FF	8	561188	562363	
C259	ENGINE COMPT-WATER HEATER	TC	2	561597	------	
C260	ENGINE COMPT-WATER HEATER	TC	1	561073	------	
C261	ENGINE COMPT-WATER HEATER	TC	2	561597	------	
C266	BATTERY COMPT. LTS	AMP MNL	2	561248	561247	
C267	LUGGAGE COMPT. LTS - 1	AMP MNL	2	561248	561247	
C268	LUGGAGE COMPT. LTS - 2	AMP MNL	2	561248	561247	
C269	LUGGAGE COMPT. LTS - 3 RH	AMP MNL	2	561248	561247	
C270	LUGGAGE COMPT. LTS - 3 LH	AMP MNL	2	561248	561247	
C271	LUGGAGE COMPT. LTS - 4	AMP MNL	2	561248	561247	
C272	FR SERVICE CPT LTS	AMP MNL	2	561248	561247	
C274	FR JCT PANEL-DIODES	AMP MNL	15	561987	561986	
C276	FR JCT PANEL-ALARM BUZZER	BOSCH	5	------	561183	
C281	LH CONSOLE- FR. DEST. SIGN	SWF	2	------	561837	
C282	FR. ROOF- DEST. SIGN	AMP CPC	9	561636	561637	
C290	LUGGAGE CPT-DOOR LOCK	AMP MNL	4	560851	560852	
C291	LUGGAGE CPT-DOOR LOCK	AMP MNL	4	560851	560852	
C292	LUGGAGE CPT-DOOR LOCK	AMP MNL	4	560851	560852	
C293	WIPER MOTOR	AMP FF	6	------	561186	
C294	UNDER DASH-WIPER SYST. FEED	AMP MNL	6	561552	561515	
C295	UNDER DASH-WIPER PULSE GEN.	AMP FF	6	------	561186	PRIOR REV 010
C296	FR SERVICE CPT-HEAD LTS	ITT SS	3	561111	561080	PRIOR REV 010
C298	FR LH HAT RACK-AMPLI	MOLEX	6	------	562464	PRIOR REV 010
C299	FR LH HAT RACK-AMPLI	MOLEX	10	------	562465	PRIOR REV 010
C300	FR LH HAT RACK-AMPLI	MOLEX	6	------	562464	
C301	FR LH HAT RACK-AMPLI	MOLEX	10	------	562465	
C302	UNDER DASH-FLASHER MODULE	AMP MNL	2	560900	560898	
C309	ENGINE DDEC III-ECM POWER	PED WP	5	------	562345	
C312	ENGINE DDEC III-ECM SIGNAL	PED WP	3	561781	561782	
C313	ENGINE DDEC III-OUTPUT	PED WP	4	562398	------	
C314	FR SERVICE CPT-PRESS SW KNEEL	PED WP	2	561566	561690	
C315	FR SERVICE CPT-KNEEL ALARM	PED WP	2	561566	561690	
C316	FR SERVICE CPT-KNEEL ALARM	AMP MNL	2	560900	560898	
C326	ENGINE DDEC III- MANUAL TR.	PED WP	4	561610	561611	
C364	FR ROOF-DESTINATION SIGN	AMP MNL	3	561667	561550	
C365	FR ROOF-DESTINATION SIGN	AMP MNL	2	560900	560898	
C368	FR ROOF-DEST. SIGN BALLAST	AMP MNL	3	561667	561550	
C369	FR ROOF-DEST. SIGN OPER. SW.	TORRIX	5	------	562110	
C370	FR ROOF-DEST. SIGN FLUOR.	AMP MNL	2	560900	560898	
C371	FR ROOF-DEST. SIGN FLUOR.	AMP MNL	2	560900	560898	
C372	FR ROOF-DEST. SIGN SPEED SW.	MOLEX	4	561477	561476	

NO.	LOCATION	TYPE	(NB) CAVITY	•PIN HOUSING	•SOCKET HOUSING	
C382	ENGINE GENERATOR 12 VAC RLY	PED WP	1	561605	561577	
C383	LH UNDER DASH-MICRO W/O WIRE	AMP MNL	2	561248	561247	PRIOR REV. 010
C384	LH UNDER DASH-MICRO W/O WIRE	AMP MNL	3	561550	561667	PRIOR REV. 010
C385	BATTERY COMPT. ACC.	AMP MNL	12	561735	561734	
C386	CONDENSER CPT-BYPASS VALVE	PED WP	2	561566	561590	
C387	EVAPORATOR CPT-BYPASS VALVE	PED WP	2	561566	561590	
C388	LH SW PANEL-MASTER SW	SWF	8	------	561107	
C389	EVAPORATOR CPT-WATER PUMP	PED WP	2	561566	561590	
C390	CONDENSER CPT.-A/C JCT BOX	DEUTSCH	24	562280	562283	
C391	CONDENSER CPT.-PRESS.SW	PED WP	2	561566	561590	
C392	CONDENSER CPT.- MOTOR FAN	PED WP	2	561566	561590	
C393	CONDENSER CPT.- MOTOR FAN	PED WP	2	561566	561590	
C394	LH OVER CONSOLE- B/U MONITOR	AMP MNL	4	560851	560852	
C395	LH OVER CONSOLE- B/U MONITOR	AMP MNL	5	------	------	
C396	CONDENSER CPT.- MOTOR FAN	PED WP	2	561566	561590	
C396	HAT RACK SPEAKER	MOLEX	4	562507	562503	
C397	CONDENSER CPT.- MOTOR FAN	PED WP	2	561566	561590	
C421	ENGINE CPT. WEBASTO WATER HTR	AMP FF	2	562474	562473	
C422	ENGINE CPT. WEBASTO WATER HTR	PED	2	562644	561597	
C426	ENGINE S60 RAD. FAN CLUTCH	PED WP	3	561781	561782	
C430	DRIVER GUARD WATER HTR TIMER	AMP FF	8	561188	562363	
C450	SOUND SYS. JCT. PANEL	MOLEX	4	562507	562503	
C451	WIRELESS MICRO-FIRST CPT BAG	MOLEX	2	562550	562549	
C452	UNDER DASH INSTR. PANEL	MOLEX	2	562550	562549	
C453	SOUND SYS. JCT.PANEL-VCP	PED WP	2	561566	561590	
C454	SOUND SYS.JCT.PAN.-FILT. VCP	PED WP	2	561566	561590	
C455	WIRELESS MICRO-LH HAT-RACK	CINCH	2	562554	562551	
C456	WORLD TRANSM.-RETARDER ACCUM.	PED MP	2	------	562427	
C457	WORLD TRANSM.-MAIN CONNECTOR	DEUTSCH	31	562572	562536	
C458	WORLD TRANSM.-TURBINE SP.SENS	PED MP	2	------	562426	
C459	WORLD TRANSM.-ENGINE SP.SENS.	PED MP	2	------	562426	
C460	WORLD TRANSM.-SPEED SENSOR	ITT	2	------	562541	
C461	WORLD TRANSM.-RETARDER TEMP.	PED MP	2	561566	561590	
C462	WORLD TRANSM.-RETARD SOL."K"	PED MP	2	------	562426	
C463	WORLD TRANSM.-SENSOR CONN.	DEUTSCH	16	562570	562571	
C464	FR SERVICE CPT.-DDL CONN W.T.	PED MP	12	------	562574	
C465	LH CONSOLE-SHIFTER SELECTOR	T & BET	10	------	562429	
C466	FR SERVICE CPT.-RESIS. MOD.	PED WP	3	------	562428	
C467	FR SERVICE CPT.-RESIS. MOD.	PED WP	3	------	562428	
C468	FR SERVICE CPT.-VIM MOD. W.T.	PED MP	18	------	562573	
C470	FR SERVICE CPT.-SILENT 1000	AMP MNL	2	561248	561247	
C471	FR SERVICE CPT.-SILENT 1000	AMP MNL	2	561248	561247	
C472	FR SERVICE CPT.-SILENT 1000	PED WP	2	561566	561690	
C473	FR SERVICE CPT.-SILENT 1000	AMP MNL	3	561667	561550	
C475	FR SERVICE CPT-SPEED SIGN CON	DEUTSCH	6	------	562581	
C475M	FR SERVICE CPT-SPEED SIGN M.T	DEUTSCH	6	562583	------	
C475W	FR SERVICE CPT-SPEED SIGN W.T	DEUTSCH	6	562583	------	
C500	FR JCT PANEL-PRODRIVER	MOLEX	6	562070	562069	
C501	RH CONSOLE-PRODRIVER	PED MP	7	562433	------	
C502	DRIVER GUARD PRE-HTR SW.	SWF	8	------	561107	
C503	DRIVER GUARD PRE-HTR SW.	SWF	2	------	561837	
C504	DRIVER GUARD WEBASTO TIMER	AMP FF	8	561188	562363	
C505	DRIVER GUARD ESPAR TIMER	AMP FF	3	------	562034	
C508	RR JCT BOX-FAN CLUTCH MOD	AMP MNL	6	561552	561515	
C510	FR SERVICE CPT-RESIST.RUN LTS	PED MP	2	561566	561690	
C511	LH CONSOLE SW-FAN CLUTCH	SWF	8	_____	561107	
CA	FR SERVICE CPT-ECU WORLD TR.	T & BET	34	------	562419	

CONNECTORS CODE (C) PAGE G : 2

NO.	LOCATION	TYPE	(NB) CAVITY	•PIN HOUSING	•SOCKET HOUSING
CB	FR SERVICE CPT-ECU WORLD TR.	T & BET	34	------	562420
C541	SOUND SYS.JCT.PANEL-AUDIO SEAT SYS.	PED WP	2	561566	561690
C542	LH HAT RACK-AUDIO SEAT SYSTEM	AMP MNL	3	561667	561550
C544	SOUND SYS.JCT.PANEL-SEET AUD.	PED WP	3	561781	561782
C545	LH HAT RACK-AUDIO SEAT SYSTEM	AMP MNL	3	561667	561550
WEB1	ENGINE CPT. WEBASTO WATER HTR	AMP FF	2	562474	562643
WEB2	ENGINE CPT. WEBASTO WATER HTR	AMP FF	2	562474	562643

NO.	LOCATION	TYPE	(NB) CAVITY	*PIN HOUSING	*SOCKET HOUSING
C3	UNDER DASH-LH	AMP CPC	37	561645	561646
C7	FR SERVICE COMPT.-CLUTCH SW	ITT SS	3	561111	561080
C8	FR JCT PANEL VCR FEED	AMP MNL	2	561248	561247 PRIOR REV 010
C11	LH CONSOLE SW-MIRROR	AMP MNL	3	561667	561550
C12	LH CONSOLE SW-MIRROR HTR	AMP MNL	2	561248	561247
C13	LH CONSOLE SW-MIRROR	AMP MNL	6	561552	561515
C14	UNDER DASH LH-MIRROR	AMP MNL	9	561670	561669
C15	UNDER DASH RH-MIRROR	AMP MNL	9	561670	561669
C18	UNDER DASH-FIRE ALARM	AMP MNL	2	560900	560898
C19	UNDER DASH-A/C & HEAT SYST.	TC	10	561072	561110
C20	RR JCT BOX DIODES	AMP MNL	9	561670	561669
C21	LUGGAGE COMPT.-LOCK DOOR MOT.	PED	2	------	562076
C22	ENGINE COMPT.-CYCLOP LT	PED WP	2	561566	561690
C26	UNDER INSTRUMENT.-PANEL RHEO.	TC	2	561030	560997
C29	FR SERVICE COMPT.-VIM FEED	PED WP	3	561781	561782
C32	RH CONSOLE-DRV TEMP SENSOR	BURNDY	3	------	561104
C33	FRSERVICE COMPT. DDEC VSS	PED WP	2	561566	561690
C34	RH CONSOLE-DRV TEMP CTRL	BURNDY	6	------	561103
C35	RECIRULATED AIR GRIL.-SENSER	BURNDY	3	------	561104
C36	LH CONSOLE SW-CRUISE ON/OFF	SWF	8	------	561107
C37	LH CONSOLE SW-CRUISE SET	SWF	8	------	561107
C38	LH CONSOLE SW-CRUISE RESUME	SWF	8	------	561107
C41	UNDER DASH-FLASHER UNIT	TC	2	------	561940
C49	LAVATORY NIGHT LTS	AMP MNL	2	560900	560898
C50	RH CONSOLE-PAS. TEMP CTRL	BURNDY	6	------	561103
C51	RH CONSOLE SW-A/C & HEAT	SWF	8	------	561107
C52	ENGINE COMPT.-COMPRESSOR 05G	PED WP	2	561566	561690
C53	ENGINE COMPT.-COMPRESSOR 05G	PED WP	2	561566	561690
C54	ENGINE COMPT.-COMPRESSOR 05G	TC	1	560098	560697
C61	ENGINE COMPT.-FUEL FILTER	PED WP	2	561566	561690
C65	UNDER LH HAT RACK	MOLEX	4	561477	561476
C67	LH UNDER DASH-AMPLIF. RH SPK	BLAUPUNKT	2	561988	------
C68	LH UNDER DASH-AMPLIF. RH SPK	BLAUPUNKT	2	561988	------
C73	LH SW PANEL-MULTI FUNC. LEV.	AMP FF	8	561188	------
C74	LH SW PANEL-MULTI FUNC. LEV.	AMP FF	6	------	561108
C78	LUGGAGE COMPT.-DOOR LOCK 4 LH	AMP MNL	4	560851	560852
C79	LUGGAGE COMPT.-DOOR LOCK 4 RH	AMP MNL	4	560851	560852
C80	FR JCT PANEL-LUG. DOOR LOCK	AMP MNL	6	561552	561515
C81	LUGGAGE COMPT.-DOOR LOCK 1 LH	AMP MNL	4	560851	560852
C82	LUGGAGE COMPT.-DOOR LOCK 1 RH	AMP MNL	4	560851	560852
C83	UNDER DASH-FLASHER MODULE	TC	10	561072	561110
C84	UNDER DASH-A/C SYSTEM	TC	3	561091	561071
C85	LUGGAGE COMPT.-DOOR LOCK 3 RH	AMP MNL	4	560851	560852
C86	LUGGAGE COMPT.-DOOR LOCK 3 LH	AMP MNL	4	560851	560852
C88	RR END ROOF-CLEARANCE LTS	AMP MNL	2	560900	560898
C90	RR ROOF AUX. A/C THERMOST.	BURNDY	6	------	561103
C91	RR ROOF AUX. A/C TMP SENSOR	BURNDY	6	------	561104
C92	RR ROOF AUX. A/C FAN RH	TC	2	561030	560997
C93	RR ROOF AUX. A/C FAN LH	TC	2	561030	560997
C94	RR ROOF AUX. A/C FAN RES LH	AMP MNL	2	560900	560898
C95	RR ROOF AUX. A/C FAN RES RH	AMP MNL	2	560900	560898
C96	RR ROOF AUX. A/C LIQ SOL VAL	TC	2	561030	560997
C97	RR ROOF AUX. A/C SHUT SOL VAL	AMPHENOL	2	------	560412
C98	CONDENSER CPT.	ITT SS	4	561998	561999
C101	CONDENSER CPT.-A/C PRESS. SW	PED WP	2	561566	561690
C105	UNDER DASH RH-DRV LIQ SOL VL	TC	2	561030	560997
C106	UNDER DASH RH-DRV WTR VALVE	TC	2	561030	560997
C107	UNDER DASH RH-DRV HTR RH FAN	TC	2	561030	560997
C108	UNDER DASH RH-DRV HTR LH FAN	TC	2	561030	560997

CONNECTORS CODE (C) PAGE G : 1

NO.	LOCATION	TYPE	(NB) CAVITY	*PIN HOUSING	*SOCKET HOUSING
C111	LH CONSOLE SW-DRIVER'LTS	SWF	8	------	561107
C112	LH CONSOLE SW-GENERAL LTS	SWF	8	------	561107
C114	ENGINE DDEC-SPEED SIGNAL	PED WP	2	561566	561590
C115	RR JCT BOX-ENGINE ACCES.	DEUTSCH	40	562281	562284
C116	DRIVE AXLE COMPT.-AIR DRYER	PED MP	2	------	562251
C119	ENGINE COMPT.-LH LOWER LAMP	PED WP	6	561606	561607
C120	ENGINE COMPT.-LH LOWER LAMP	PED WP	6	561606	561607
C123	HAT RACK-BALLAST RH	AMP MNL	6	561552	561515
C124	HAT RACK-FLUORESCENT	AMP MNL	4	561551	561668
C125	HAT RACK-FLUORESCENT	AMP MNL	4	561551	561668
C126	HAT RACK-READING LTS	AMP MNL	2	560900	560898
C130	LH CONSOLE SW-READING LTS	SWF	8	------	561107
C131	LH CONSOLE SW-LUG.DOOR LOCK	SWF	8	------	561107
C132	LH CONSOLE SW-PAS & HOS CHIME	SWF	8	------	561107
C133	LH CONSOLE SW-JACOB OR RET.	SWF	8	------	561107
C134	LH CONSOLE SW-GALLEY	SWF	8	------	561107
C135	LH SW PANEL-ETHER	SWF	8	------	561107
C136	LH CONSOLE SW-MIRROR HTR	SWF	8	------	561107
C137	RH SW PANEL-HEAD LAMP	SWF	8	------	561107
C138	RH SW PANEL-SPARE	SWF	8	------	561107
C139	RH SW PANEL-FOG LAMP	SWF	8	------	561107
C140	FR JCT PANEL-BAT. HI/LO	AMP MNL	2	560900	560898
C141	ENGINE COMPT.-B/UP ALARM	PED WP	2	561566	561590
C142	FR SERVICE CPT-LH MARKER LTS	ITT SS	3	561111	561080
C143	RR LH HAT RACK-FEEDING	AMP MNL	9	561661	561662
C144	RR RH HAT RACK-FEEDING	AMP MNL	9	561661	561662
C145	RH HAT RACK-BALLAST	AMP MNL	4	560851	560852
C146	FR SERVICE CPT-RH MARKER LTS	ITT SS	3	561111	561080
C147	RR ROOF LH-EMERGENCY EXIT LTS	AMP MNL	2	560900	560898
C148	RR ROOF RH-EMERGENCY EXIT LTS	AMP MNL	2	560900	560898
C149	LH HAT RACK-BALLAST	AMP MNL	4	560851	560852
C150	FR RH HAT RACK-110V FLUOR	AMP MNL	2	561248	561247
C151	FR LH HAT RACK-110V FLUOR	AMP MNL	2	561248	561247
C152	LH HAT RACK-GENERAL LTS	AMP MNL	3	561667	561550
C153	RH HAT RACK-GENERAL LTS	AMP MNL	3	561667	561550
C154	RH SW PANEL-HAZARD	SWF	8	------	561107
C155	LH SW PANEL-FAST IDLE	SWF	8	------	561107
C156	LH SW PANEL-STP ENG. OVER.	SWF	8	------	561107
C158	RR ROOF AUX. A/C FEEDING	AMP MNL	3	561667	561550
C160	FR SERVICE CPT-INTERFACE	AMP CPC	37	561644	561646
C161	ENGINE DDEC III-ECM	PED	30	------	561600
C162	ENGINE DDEC III-ACCESSORIES	PED WP	4	561610	561611
C163	ENGINE CPT-COOLANT PROBE	PED MP	2	------	562350
C164	FR SERVICE JCT BOX	AMP CPC	22	561709	561710
C165	FR SERVICE JCT BOX	AMP CPC	16	561693	561695
C166	UNDER INSTRUMENT PANEL	AMP CPC	16	561639	561640
C167	FR SERVICE CPT-EL. FOOT PEDAL	PED WP	3	561781	561782
C168	FR SERVICE CPT-DDR	DEUTSCH	6	562360	------
C169	FR SERVICE CPT-WORLD TR. VIW	AMP CPC	16	561638	561640
C172	ENGINE COMPT-WATER TANK HEAT.	PED WP	2	561566	561690
C173	LAV.PORTABLE-WATER TANK HEAT.	AMP MNL	2	560900	560898
C175	FR SERV CPT-KNEELING FEEDING	PED WP	3	561781	561782
C177	GALLEY-REFRIGERATOR	AMP MNL	2	561248	561247

NO.	LOCATION	TYPE	(NB) CAVITY	*PIN HOUSING	*SOCKET HOUSING	
C179	RH HAT RACK-110V MONITOR	MOLEX	4	561477	561476	PRIOR REV. 010
C180	FR SERV CPT-KNEEL. DIODE	AMP MNL	9	561670	561699	
C181	FR SERV CPT-KNEELING MODULE	AMP MNL	12	561735	561734	
C182	FR SERVICE CPT-SPEED SW	AMP HDP	15	------	562012	
C184	FR SERV CPT-KNEEL. MOD. CTRL	AMP MNL	3	------	561550	
C184	FR AXLE-KNEELING PROXIMITY SW	AMP MNL	3	561667	561550	
C185	FR SERV CPT-KNEEL. MOD. EXH.	AMP MNL	3	------	561550	
C187	FR SERV CPT-KNEEL. MOD. BRK	AMP MNL	3	------	561550	
C187	FR SERVICE JCT BOX-RESISTORS	AMP MNL	6	561552	561515	
C188	LH CONSOLE SW-KNEELING	SWF	8	------	561107	
C190	FR SERVICE CPT.-WORLD TR VIM	PED WP	30	------	561600	
C192	GALLEY-FEEDING	AMP CPC	3	561862	561847	
C194	GALLEY SW-CONTAINER RH	SWF	8	------	561107	
C195	GALLEY SW-CONTAINER LH	SWF	8	------	561107	
C199	FR SERV. JCT BOX-SERVICE BRK	AMP MNL	3	561667	561550	
C200	LH CONSOLE SW-24V FLUOR	SWF	8	------	561107	
C201	UNDER INSTRUMENT PANEL	AMP MNL	2	560900	560898	PRIOR REV. 010
C202	UNDER INSTRUMENT PANEL	AMP CPC	9	561636	561637	
C205	LH UNDER DASH-AMPLIF. LH SPK	BLAUPUNKT	2	561988	------	
C206	RH CONSOLE-FR DEFROSTER	TC	2	561030	560997	
C207	RH CONSOLE-DRV RHEOSTAT	AMP MNL	6	561552	561515	
C208	UNDER DASH-DRV HTR MODULE	AMP MNL	9	561670	561669	
C209	UNDER DASH-DRV HTR MODULE	AMP MNL	9	561670	561669	
C210	LH UNDER DASH-AMPLIF. LH SPK	BLAUPUNKT	2	561988	------	
C211	RH CONSOLE-VCR VOLUME	AMP MNL	4	561551	561668	PRIOR REV. 010
C212	LH CONSOLE SW-VCR VIDEO	SWF	8	------	561107	PRIOR REV. 010
C213	FR ROOF-CLEARANCE LT	AMP MNL	2	560900	560898	
C214	UNDER DASH PANEL-TACHOGRAPH	V.D.O.	8	------	562041	
C215	UNDER DASH PANEL-TACHOGRAPH	V.D.O.	8	------	562043	
C216	UNDER DASH PANEL-TACHOGRAPH	AMP MNL	4	560851	560852	
C217	FR LH HAT RACK-SPEAKER	AMP MNL	4	561659	561660	
C218	FR RH HAT RACK-SPEAKER	AMP MNL	4	561659	561660	
C219	DASH RHEOSTAT-P.A. VOLUME	MOLEX	4	561477	561476	PRIOR REV. 010
C220	LH UNDER DASH-P.A. VOLUME	AMP MNL	3	561667	561550	PRIOR REV. 010
C221	LH UNDER DASH-AMPLIFIER FEED	AMP MNL	3	561550	561667	PRIOR REV. 010
C222	LH UNDER DASH-P.A. RADIO	AMP MNL	9	561670	561669	PRIOR REV. 010
C223	LH UNDER DASH-P.A. RADIO	AMP MNL	9	561670	561669	PRIOR REV. 010
C224	LH UNDER DASH-PA & RADIO FEED	AMP MNL	6	561552	561515	PRIOR REV. 010
C225	LH UNDER DASH-PA MICRO OUTLET	AMP MNL	3	561667	561550	PRIOR REV. 010
C226	LH UNDER DASH-PA MICRO OUTLET	AMP MNL	3	561667	561550	PRIOR REV. 010
C227	RH CONSOLE-SPEAKER CONTROL SW	SWF	8	------	561107	PRIOR REV. 010
C229	LH UNDER DASH-PA DRV SPEAKERS	AMP MNL	4	561551	561668	PRIOR REV. 010
C230	ENG.CPT.-FUEL PRIME PUMP SW.	PED WP	2	561566	561690	
C231	ENG.CPT.-FUEL PRIME PUMP	PED WP	2	561566	561690	
C232	UNDER L.H. CONSOLE	MOLEX	4	561477	561476	PRIOR REV. 010
C233	MICRO OUTLET SOCKET	MOLEX	4	561477	561476	PRIOR REV. 010
C234	UNDER INSTRUMENT PANEL-VDO	AMP MNL	4	560851	560852	PRIOR REV. 010
C234	UNDER INSTRUMENT PANEL-VDO	AMP FF	8	------	562363	
C235	UNDER INSTRUMENT PANEL-VDO	AMP MNL	4	560851	560852	PRIOR REV. 010
C235	UNDER INSTRUMENT PANEL-VDO	AMP FF	8	------	562363	
C236	FR SERVICE CPT CENTER-ABS	AMP CPC	14	561585	561583	
C237	FR AXLE CPT-ABS RH SENSOR	WABCO	2	641132	------	
C238	FR AXLE CPT-ABS RH VALVE	WABCO	3	------	641098	
C239	FR AXLE CPT-ABS LH VALVE	WABCO	3	------	641098	
C240	FR AXLE CPT-ABS LH SENSOR	WABCO	2	641132	------	
C241	DRIVE AXLE CPT-ABS	PED WP	6	561606	561607	
C242	DRIVE AXLE CPT-ABS LH SENSOR	DEUTSCH	2	562486	562485	

CONNECTORS CODE (C) PAGE G : 2

NO.	LOCATION	TYPE	(NB) CAVITY	*PIN HOUSING	*SOCKET HOUSING	
C243	DRIVE AXLE CPT-ABS LH VALVE	WABCO	3	------	641098	
C244	DRIVE AXLE CPT-ABS RH VALVE	WABCO	3	------	641098	
C245	DRIVE AXLE CPT-ABS RH SENSOR	WABCO	2	641132	------	PROIR S570
C245	DRIVE AXLE CPT-ABS RH SENSOR	DEUTSCH	2	562486	562485	EFF. W/S570
C246	DRIVE AXLE CPT-ABS SPARE	PED WP	4	561610	561611	
C247	FR SERVICE CPT-ABS MODULE	WABCO	35	------	561094	
C248	DRIVE AXLE CPT-ABS	PED WP	6	561606	561607	
C249	FR SERVICE CPT-ABS/DDEC	PED WP	2	561566	561690	
C250	RH SW PANEL-B/UP CANCEL	SWF	8	------	561107	
C251	RH SW PANEL-SEAT HTR	SWF	8	------	561107	
C252	LH SW PANEL-SWITCH LT	SWF	2	------	561837	
C254	FR SERVICE JCT BOX-ABS	AMP CPC	16	561693	561695	
C255	RH CONSOLE-RADIO	AMP MNL	9	561670	561669	PRIOR REV 010
C257	ENGINE COMPT-WATER HEATER	AMP FF	6	------	561186	
C258	DRIVER GUARD WATER HTR TIMER	AMP FF	8	561188	562363	
C259	ENGINE COMPT-WATER HEATER	TC	2	561597	------	
C260	ENGINE COMPT-WATER HEATER	TC	1	561073	------	
C261	ENGINE COMPT-WATER HEATER	TC	2	561597	------	
C266	BATTERY COMPT. LTS	AMP MNL	2	561248	561247	
C267	LUGGAGE COMPT. LTS - 1	AMP MNL	2	561248	561247	
C268	LUGGAGE COMPT. LTS - 2	AMP MNL	2	561248	561247	
C269	LUGGAGE COMPT. LTS - 3 RH	AMP MNL	2	561248	561247	
C270	LUGGAGE COMPT. LTS - 3 LH	AMP MNL	2	561248	561247	
C271	LUGGAGE COMPT. LTS - 4	AMP MNL	2	561248	561247	
C272	FR SERVICE CPT LTS	AMP MNL	2	561248	561247	
C274	FR JCT PANEL-DIODES	AMP MNL	15	561987	561986	
C276	FR JCT PANEL-ALARM BUZZER	BOSCH	5	------	561183	
C281	LH CONSOLE- FR. DEST. SIGN	SWF	2	------	561837	
C282	FR. ROOF- DEST. SIGN	AMP CPC	9	561636	561637	
C290	LUGGAGE CPT-DOOR LOCK	AMP MNL	4	560851	560852	
C291	LUGGAGE CPT-DOOR LOCK	AMP MNL	4	560851	560852	
C292	LUGGAGE CPT-DOOR LOCK	AMP MNL	4	560851	560852	
C293	WIPER MOTOR	AMP FF	6	------	561186	
C294	UNDER DASH-WIPER SYST. FEED	AMP MNL	6	561552	561515	
C295	UNDER DASH-WIPER PULSE GEN.	AMP FF	6	------	561186	PRIOR REV 010
C296	FR SERVICE CPT-HEAD LTS	ITT SS	3	561111	561080	PRIOR REV 010
C298	FR LH HAT RACK-AMPLI	MOLEX	6	------	562464	PRIOR REV 010
C299	FR LH HAT RACK-AMPLI	MOLEX	10	------	562465	PRIOR REV 010
C300	FR LH HAT RACK-AMPLI	MOLEX	6	------	562464	
C301	FR LH HAT RACK-AMPLI	MOLEX	10	------	562465	
C302	UNDER DASH-FLASHER MODULE	AMP MNL	2	560900	560898	
C309	ENGINE DDEC III-ECM POWER	PED WP	5	------	562345	
C312	ENGINE DDEC III-ECM SIGNAL	PED WP	3	561781	561782	
C313	ENGINE DDEC III-OUTPUT	PED WP	4	562398	------	
C314	FR SERVICE CPT-PRESS SW KNEEL	PED WP	2	561566	561690	
C315	FR SERVICE CPT-KNEEL ALARM	PED WP	2	561566	561690	
C316	FR SERVICE CPT-KNEEL ALARM	AMP MNL	2	560900	560898	
C326	ENGINE DDEC III- MANUAL TR.	PED WP	4	561610	561611	
C364	FR ROOF-DESTINATION SIGN	AMP MNL	3	561667	561550	
C365	FR ROOF-DESTINATION SIGN	AMP MNL	2	560900	560898	
C368	FR ROOF-DEST. SIGN BALLAST	AMP MNL	3	561667	561550	
C369	FR ROOF-DEST. SIGN OPER. SW.	TORRIX	5	------	562110	
C370	FR ROOF-DEST. SIGN FLUOR.	AMP MNL	2	560900	560898	
C371	FR ROOF-DEST. SIGN FLUOR.	AMP MNL	2	560900	560898	
C372	FR ROOF-DEST. SIGN SPEED SW.	MOLEX	4	561477	561476	

NO.	LOCATION	TYPE	(NB) CAVITY	•PIN HOUSING	•SOCKET HOUSING	
C382	ENGINE GENERATOR 12 VAC RLY	PED WP	1	561605	561577	
C383	LH UNDER DASH-MICRO W/O WIRE	AMP MNL	2	561248	561247	PRIOR REV. 010
C384	LH UNDER DASH-MICRO W/O WIRE	AMP MNL	3	561550	561667	PRIOR REV. 010
C385	BATTERY COMPT. ACC.	AMP MNL	12	561735	561734	
C386	CONDENSER CPT-BYPASS VALVE	PED WP	2	561566	561590	
C387	EVAPORATOR CPT-BYPASS VALVE	PED WP	2	561566	561590	
C388	LH SW PANEL-MASTER SW	SWF	8	------	561107	
C389	EVAPORATOR CPT-WATER PUMP	PED WP	2	561566	561590	
C390	CONDENSER CPT.-A/C JCT BOX	DEUTSCH	24	562280	562283	
C391	CONDENSER CPT.-PRESS.SW	PED WP	2	561566	561590	
C392	CONDENSER CPT.- MOTOR FAN	PED WP	2	561566	561590	
C393	CONDENSER CPT.- MOTOR FAN	PED WP	2	561566	561590	
C394	LH OVER CONSOLE- B/U MONITOR	AMP MNL	4	560851	560852	
C395	LH OVER CONSOLE- B/U MONITOR	AMP MNL	5	------	------	
C396	CONDENSER CPT.- MOTOR FAN	PED WP	2	561566	561590	
C396	HAT RACK SPEAKER	MOLEX	4	562507	562503	
C397	CONDENSER CPT.- MOTOR FAN	PED WP	2	561566	561590	
C421	ENGINE CPT. WEBASTO WATER HTR	AMP FF	2	562474	562473	
C422	ENGINE CPT. WEBASTO WATER HTR	PED	2	562644	561597	
C426	ENGINE S60 RAD. FAN CLUTCH	PED WP	3	561781	561782	
C430	DRIVER GUARD WATER HTR TIMER	AMP FF	8	561188	562363	
C450	SOUND SYS. JCT. PANEL	MOLEX	4	562507	562503	
C451	WIRELESS MICRO-FIRST CPT BAG	MOLEX	2	562550	562549	
C452	UNDER DASH INSTR. PANEL	MOLEX	2	562550	562549	
C453	SOUND SYS. JCT.PANEL-VCP	PED WP	2	561566	561590	
C454	SOUND SYS.JCT.PAN.-FILT. VCP	PED WP	2	561566	561590	
C455	WIRELESS MICRO-LH HAT-RACK	CINCH	2	562554	562551	
C456	WORLD TRANSM.-RETARDER ACCUM.	PED MP	2	------	562427	
C457	WORLD TRANSM.-MAIN CONNECTOR	DEUTSCH	31	562572	562536	
C458	WORLD TRANSM.-TURBINE SP.SENS	PED MP	2	------	562426	
C459	WORLD TRANSM.-ENGINE SP.SENS.	PED MP	2	------	562426	
C460	WORLD TRANSM.-SPEED SENSOR	ITT	2	------	562541	
C461	WORLD TRANSM.-RETARDER TEMP.	PED MP	2	561566	561590	
C462	WORLD TRANSM.-RETARD SOL."K"	PED MP	2	------	562426	
C463	WORLD TRANSM.-SENSOR CONN.	DEUTSCH	16	562570	562571	
C464	FR SERVICE CPT.-DDL CONN W.T.	PED MP	12	------	562574	
C465	LH CONSOLE-SHIFTER SELECTOR	T & BET	10	------	562429	
C466	FR SERVICE CPT.-RESIS. MOD.	PED WP	3	------	562428	
C467	FR SERVICE CPT.-RESIS. MOD.	PED WP	3	------	562428	
C468	FR SERVICE CPT.-VIM MOD. W.T.	PED MP	18	------	562573	
C470	FR SERVICE CPT.-SILENT 1000	AMP MNL	2	561248	561247	
C471	FR SERVICE CPT.-SILENT 1000	AMP MNL	2	561248	561247	
C472	FR SERVICE CPT.-SILENT 1000	PED WP	2	561566	561690	
C473	FR SERVICE CPT.-SILENT 1000	AMP MNL	3	561667	561550	
C475	FR SERVICE CPT-SPEED SIGN CON	DEUTSCH	6	------	562581	
C475M	FR SERVICE CPT-SPEED SIGN M.T	DEUTSCH	6	562583	------	
C475W	FR SERVICE CPT-SPEED SIGN W.T	DEUTSCH	6	562583	------	
C500	FR JCT PANEL-PRODRIVER	MOLEX	6	562070	562069	
C501	RH CONSOLE-PRODRIVER	PED MP	7	562433	------	
C502	DRIVER GUARD PRE-HTR SW.	SWF	8	------	561107	
C503	DRIVER GUARD PRE-HTR SW.	SWF	2	------	561837	
C504	DRIVER GUARD WEBASTO TIMER	AMP FF	8	561188	562363	
C505	DRIVER GUARD ESPAR TIMER	AMP	12	------	562681	
C508	RR JCT BOX-FAN CLUTCH MOD	AMP MNL	6	561552	561515	
C510	FR SERVICE CPT-RESIST.RUN LTS	PED MP	2	561566	561690	
C511	LH CONSOLE SW-FAN CLUTCH	SWF	8	------	561107	
CA	FR SERVICE CPT-ECU WORLD TR.	T & BET	34	------	562419	

CONNECTORS CODE (C) PAGE G : 2

NO.	LOCATION	TYPE	(NB) CAVITY	•PIN HOUSING	•SOCKET HOUSING
CB	FR SERVICE CPT-ECU WORLD TR.	T & BET	34	------	562420
C541	SOUND SYS.JCT.PANEL-AUDIO SEAT SYS.	PED WP	2	561566	561690
C542	LH HAT RACK-AUDIO SEAT SYSTEM	AMP MNL	3	561667	561550
C544	SOUND SYS.JCT.PANEL-SEET AUD.	PED WP	3	561781	561782
C545	LH HAT RACK-AUDIO SEAT SYSTEM	AMP MNL	3	561667	561550
WEB1	ENGINE CPT. WEBASTO WATER HTR	AMP FF	2	562474	562643
WEB2	ENGINE CPT. WEBASTO WATER HTR	AMP FF	2	562474	562643

NO.	LOCATION	TYPE	(NB) CAVITY	*PIN HOUSING	*SOCKET HOUSING
C3	UNDER DASH-LH	AMP CPC	37	561645	561646
C7	FR SERVICE COMPT.-CLUTCH SW	ITT SS	3	561111	561080
C8	FR JCT PANEL VCR FEED	AMP MNL	2	561248	561247 PRIOR REV 010
C11	LH CONSOLE SW-MIRROR	AMP MNL	3	561667	561550
C12	LH CONSOLE SW-MIRROR HTR	AMP MNL	2	561248	561247
C13	LH CONSOLE SW-MIRROR	AMP MNL	6	561552	561515
C14	UNDER DASH LH-MIRROR	AMP MNL	9	561670	561669
C15	UNDER DASH RH-MIRROR	AMP MNL	9	561670	561669
C18	UNDER DASH-FIRE ALARM	AMP MNL	2	560900	560898
C19	UNDER DASH-A/C & HEAT SYST.	TC	10	561072	561110
C20	RR JCT BOX DIODES	AMP MNL	9	561670	561669
C21	LUGGAGE COMPT.-LOCK DOOR MOT.	PED	2	------	562076
C22	ENGINE COMPT.-CYCLOP LT	PED WP	2	561566	561690
C26	UNDER INSTRUMENT.-PANEL RHEO.	TC	2	561030	560997
C29	FR SERVICE COMPT.-VIM FEED	PED WP	3	561781	561782
C32	RH CONSOLE-DRV TEMP SENSOR	BURNDY	3	------	561104
C33	FRSERVICE COMPT. DDEC VSS	PED WP	2	561566	561690
C34	RH CONSOLE-DRV TEMP CTRL	BURNDY	6	------	561103
C35	RECIRULATED AIR GRIL.-SENSER	BURNDY	3	------	561104
C36	LH CONSOLE SW-CRUISE ON/OFF	SWF	8	------	561107
C37	LH CONSOLE SW-CRUISE SET	SWF	8	------	561107
C38	LH CONSOLE SW-CRUISE RESUME	SWF	8	------	561107
C41	UNDER DASH-FLASHER UNIT	TC	2	------	561940
C49	LAVATORY NIGHT LTS	AMP MNL	2	560900	560898
C50	RH CONSOLE-PAS. TEMP CTRL	BURNDY	6	------	561103
C51	RH CONSOLE SW-A/C & HEAT	SWF	8	------	561107
C52	ENGINE COMPT.-COMPRESSOR 05G	PED WP	2	561566	561690
C53	ENGINE COMPT.-COMPRESSOR 05G	PED WP	2	561566	561690
C54	ENGINE COMPT.-COMPRESSOR 05G	TC	1	560098	560697
C61	ENGINE COMPT.-FUEL FILTER	PED WP	2	561566	561690
C65	UNDER LH HAT RACK	MOLEX	4	561477	561476
C67	LH UNDER DASH-AMPLIF. RH SPK	BLAUPUNKT	2	561988	------
C68	LH UNDER DASH-AMPLIF. RH SPK	BLAUPUNKT	2	561988	------
C73	LH SW PANEL-MULTI FUNC. LEV.	AMP FF	8	561188	------
C74	LH SW PANEL-MULTI FUNC. LEV.	AMP FF	6	------	561108
C78	LUGGAGE COMPT.-DOOR LOCK 4 LH	AMP MNL	4	560851	560852
C79	LUGGAGE COMPT.-DOOR LOCK 4 RH	AMP MNL	4	560851	560852
C80	FR JCT PANEL-LUG. DOOR LOCK	AMP MNL	6	561552	561515
C81	LUGGAGE COMPT.-DOOR LOCK 1 LH	AMP MNL	4	560851	560852
C82	LUGGAGE COMPT.-DOOR LOCK 1 RH	AMP MNL	4	560851	560852
C83	UNDER DASH-FLASHER MODULE	TC	10	561072	561110
C84	UNDER DASH-A/C SYSTEM	TC	3	561091	561071
C85	LUGGAGE COMPT.-DOOR LOCK 3 RH	AMP MNL	4	560851	560852
C86	LUGGAGE COMPT.-DOOR LOCK 3 LH	AMP MNL	4	560851	560852
C88	RR END ROOF-CLEARANCE LTS	AMP MNL	2	560900	560898
C90	RR ROOF AUX. A/C THERMOST.	BURNDY	6	------	561103
C91	RR ROOF AUX. A/C TMP SENSOR	BURNDY	6	------	561104
C92	RR ROOF AUX. A/C FAN RH	TC	2	561030	560997
C93	RR ROOF AUX. A/C FAN LH	TC	2	561030	560997
C94	RR ROOF AUX. A/C FAN RES LH	AMP MNL	2	560900	560898
C95	RR ROOF AUX. A/C FAN RES RH	AMP MNL	2	560900	560898
C96	RR ROOF AUX. A/C LIQ SOL VAL	TC	2	561030	560997
C97	RR ROOF AUX. A/C SHUT SOL VAL	AMPHENOL	2	------	560412
C98	CONDENSER CPT.	ITT SS	4	561998	561999
C101	CONDENSER CPT.-A/C PRESS. SW	PED WP	2	561566	561690
C105	UNDER DASH RH-DRV LIQ SOL VL	TC	2	561030	560997
C106	UNDER DASH RH-DRV WTR VALVE	TC	2	561030	560997
C107	UNDER DASH RH-DRV HTR RH FAN	TC	2	561030	560997
C108	UNDER DASH RH-DRV HTR LH FAN	TC	2	561030	560997

CONNECTORS CODE (C) PAGE G : 1

NO.	LOCATION	TYPE	(NB) CAVITY	*PIN HOUSING	*SOCKET HOUSING
C111	LH CONSOLE SW-DRIVER'LTS	SWF	8	------	561107
C112	LH CONSOLE SW-GENERAL LTS	SWF	8	------	561107
C114	ENGINE DDEC-SPEED SIGNAL	PED WP	2	561566	561590
C115	RR JCT BOX-ENGINE ACCES.	DEUTSCH	40	562281	562284
C116	DRIVE AXLE COMPT.-AIR DRYER	PED MP	2	------	562251
C119	ENGINE COMPT.-LH LOWER LAMP	PED WP	6	561606	561607
C120	ENGINE COMPT.-LH LOWER LAMP	PED WP	6	561606	561607
C123	HAT RACK-BALLAST RH	AMP MNL	6	561552	561515
C124	HAT RACK-FLUORESCENT	AMP MNL	4	561551	561668
C125	HAT RACK-FLUORESCENT	AMP MNL	4	561551	561668
C126	HAT RACK-READING LTS	AMP MNL	2	560900	560898
C130	LH CONSOLE SW-READING LTS	SWF	8	------	561107
C131	LH CONSOLE SW-LUG.DOOR LOCK	SWF	8	------	561107
C132	LH CONSOLE SW-PAS & HOS CHIME	SWF	8	------	561107
C133	LH CONSOLE SW-JACOB OR RET.	SWF	8	------	561107
C134	LH CONSOLE SW-GALLEY	SWF	8	------	561107
C135	LH SW PANEL-ETHER	SWF	8	------	561107
C136	LH CONSOLE SW-MIRROR HTR	SWF	8	------	561107
C137	RH SW PANEL-HEAD LAMP	SWF	8	------	561107
C138	RH SW PANEL-SPARE	SWF	8	------	561107
C139	RH SW PANEL-FOG LAMP	SWF	8	------	561107
C140	FR JCT PANEL-BAT. HI/LO	AMP MNL	2	560900	560898
C141	ENGINE COMPT.-B/UP ALARM	PED WP	2	561566	561590
C142	FR SERVICE CPT-LH MARKER LTS	ITT SS	3	561111	561080
C143	RR LH HAT RACK-FEEDING	AMP MNL	9	561661	561662
C144	RR RH HAT RACK-FEEDING	AMP MNL	9	561661	561662
C145	RH HAT RACK-BALLAST	AMP MNL	4	560851	560852
C146	FR SERVICE CPT-RH MARKER LTS	ITT SS	3	561111	561080
C147	RR ROOF LH-EMERGENCY EXIT LTS	AMP MNL	2	560900	560898
C148	RR ROOF RH-EMERGENCY EXIT LTS	AMP MNL	2	560900	560898
C149	LH HAT RACK-BALLAST	AMP MNL	4	560851	560852
C150	FR RH HAT RACK-110V FLUOR	AMP MNL	2	561248	561247
C151	FR LH HAT RACK-110V FLUOR	AMP MNL	2	561248	561247
C152	LH HAT RACK-GENERAL LTS	AMP MNL	3	561667	561550
C153	RH HAT RACK-GENERAL LTS	AMP MNL	3	561667	561550
C154	RH SW PANEL-HAZARD	SWF	8	------	561107
C155	LH SW PANEL-FAST IDLE	SWF	8	------	561107
C156	LH SW PANEL-STP ENG. OVER.	SWF	8	------	561107
C158	RR ROOF AUX. A/C FEEDING	AMP MNL	3	561667	561550
C160	FR SERVICE CPT-INTERFACE	AMP CPC	37	561644	561646
C161	ENGINE DDEC III-ECM	PED	30	------	561600
C162	ENGINE DDEC III-ACCESSORIES	PED WP	4	561610	561611
C163	ENGINE CPT-COOLANT PROBE	PED MP	2	------	562350
C164	FR SERVICE JCT BOX	AMP CPC	22	561709	561710
C165	FR SERVICE JCT BOX	AMP CPC	16	561693	561695
C166	UNDER INSTRUMENT PANEL	AMP CPC	16	561639	561640
C167	FR SERVICE CPT-EL. FOOT PEDAL	PED WP	3	561781	561782
C168	FR SERVICE CPT-DDR	DEUTSCH	6	562360	------
C169	FR SERVICE CPT-WORLD TR. VIW	AMP CPC	16	561638	561640
C172	ENGINE COMPT-WATER TANK HEAT.	PED WP	2	561566	561690
C173	LAV.PORTABLE-WATER TANK HEAT.	AMP MNL	2	560900	560898
C175	FR SERV CPT-KNEELING FEEDING	PED WP	3	561781	561782
C177	GALLEY-REFRIGERATOR	AMP MNL	2	561248	561247

NO.	LOCATION	TYPE	(NB) CAVITY	•PIN HOUSING	•SOCKET HOUSING	
C179	RH HAT RACK-110V MONITOR	MOLEX	4	561477	561476	PRIOR REV. 010
C180	FR SERV CPT-KNEEL. DIODE	AMP MNL	9	561670	561699	
C181	FR SERV CPT-KNEELING MODULE	AMP MNL	12	561735	561734	
C182	FR SERVICE CPT-SPEED SW	AMP HDP	15	------	562012	
C184	FR SERV CPT-KNEEL. MOD. CTRL	AMP MNL	3	------	561550	
C184	FR AXLE-KNEELING PROXIMITY SW	AMP MNL	3	561667	561550	
C185	FR SERV CPT-KNEEL. MOD. EXH.	AMP MNL	3	------	561550	
C187	FR SERV CPT-KNEEL. MOD. BRK	AMP MNL	3	------	561550	
C187	FR SERVICE JCT BOX-RESISTORS	AMP MNL	6	561552	561515	
C188	LH CONSOLE SW-KNEELING	SWF	8	------	561107	
C190	FR SERVICE CPT.-WORLD TR VIM	PED WP	30	------	561600	
C192	GALLEY-FEEDING	AMP CPC	3	561862	561847	
C194	GALLEY SW-CONTAINER RH	SWF	8	------	561107	
C195	GALLEY SW-CONTAINER LH	SWF	8	------	561107	
C199	FR SERV. JCT BOX-SERVICE BRK	AMP MNL	3	561667	561550	
C200	LH CONSOLE SW-24V FLUOR	SWF	8	------	561107	
C201	UNDER INSTRUMENT PANEL	AMP MNL	2	560900	560898	PRIOR REV. 010
C202	UNDER INSTRUMENT PANEL	AMP CPC	9	561636	561637	
C205	LH UNDER DASH-AMPLIF. LH SPK	BLAUPUNKT	2	561988	------	
C206	RH CONSOLE-FR DEFROSTER	TC	2	561030	560997	
C207	RH CONSOLE-DRV RHEOSTAT	AMP MNL	6	561552	561515	
C208	UNDER DASH-DRV HTR MODULE	AMP MNL	9	561670	561669	
C209	UNDER DASH-DRV HTR MODULE	AMP MNL	9	561670	561669	
C210	LH UNDER DASH-AMPLIF. LH SPK	BLAUPUNKT	2	561988	------	
C211	RH CONSOLE-VCR VOLUME	AMP MNL	4	561551	561668	PRIOR REV. 010
C212	LH CONSOLE SW-VCR VIDEO	SWF	8	------	561107	PRIOR REV. 010
C213	FR ROOF-CLEARANCE LT	AMP MNL	2	560900	560898	
C214	UNDER DASH PANEL-TACHOGRAPH	V.D.O.	8	------	562041	
C215	UNDER DASH PANEL-TACHOGRAPH	V.D.O.	8	------	562043	
C216	UNDER DASH PANEL-TACHOGRAPH	AMP MNL	4	560851	560852	
C217	FR LH HAT RACK-SPEAKER	AMP MNL	4	561659	561660	
C218	FR RH HAT RACK-SPEAKER	AMP MNL	4	561659	561660	
C219	DASH RHEOSTAT-P.A. VOLUME	MOLEX	4	561477	561476	PRIOR REV. 010
C220	LH UNDER DASH-P.A. VOLUME	AMP MNL	3	561667	561550	PRIOR REV. 010
C221	LH UNDER DASH-AMPLIFIER FEED	AMP MNL	3	561550	561667	PRIOR REV. 010
C222	LH UNDER DASH-P.A. RADIO	AMP MNL	9	561670	561669	PRIOR REV. 010
C223	LH UNDER DASH-P.A. RADIO	AMP MNL	9	561670	561669	PRIOR REV. 010
C224	LH UNDER DASH-PA & RADIO FEED	AMP MNL	6	561552	561515	PRIOR REV. 010
C225	LH UNDER DASH-PA MICRO OUTLET	AMP MNL	3	561667	561550	PRIOR REV. 010
C226	LH UNDER DASH-PA MICRO OUTLET	AMP MNL	3	561667	561550	PRIOR REV. 010
C227	RH CONSOLE-SPEAKER CONTROL SW	SWF	8	------	561107	PRIOR REV. 010
C229	LH UNDER DASH-PA DRV SPEAKERS	AMP MNL	4	561551	561668	PRIOR REV. 010
C230	ENG.CPT.-FUEL PRIME PUMP SW.	PED WP	2	561566	561690	
C231	ENG.CPT.-FUEL PRIME PUMP	PED WP	2	561566	561690	
C232	UNDER L.H. CONSOLE	MOLEX	4	561477	561476	PRIOR REV. 010
C233	MICRO OUTLET SOCKET	MOLEX	4	561477	561476	PRIOR REV. 010
C234	UNDER INSTRUMENT PANEL-VDO	AMP MNL	4	560851	560852	PRIOR REV. 010
C234	UNDER INSTRUMENT PANEL-VDO	AMP FF	8	------	562363	
C235	UNDER INSTRUMENT PANEL-VDO	AMP MNL	4	560851	560852	PRIOR REV. 010
C235	UNDER INSTRUMENT PANEL-VDO	AMP FF	8	------	562363	
C236	FR SERVICE CPT CENTER-ABS	AMP CPC	14	561585	561583	
C237	FR AXLE CPT-ABS RH SENSOR	WABCO	2	641132	------	
C238	FR AXLE CPT-ABS RH VALVE	WABCO	3	------	641098	
C239	FR AXLE CPT-ABS LH VALVE	WABCO	3	------	641098	
C240	FR AXLE CPT-ABS LH SENSOR	WABCO	2	641132	------	
C241	DRIVE AXLE CPT-ABS	PED WP	6	561606	561607	
C242	DRIVE AXLE CPT-ABS LH SENSOR	DEUTSCH	2	562486	562485	

CONNECTORS CODE (C) PAGE G : 2

NO.	LOCATION	TYPE	(NB) CAVITY	•PIN HOUSING	•SOCKET HOUSING	
C243	DRIVE AXLE CPT-ABS LH VALVE	WABCO	3	------	641098	
C244	DRIVE AXLE CPT-ABS RH VALVE	WABCO	3	------	641098	
C245	DRIVE AXLE CPT-ABS RH SENSOR	WABCO	2	641132	------	PROIR S570
C245	DRIVE AXLE CPT-ABS RH SENSOR	DEUTSCH	2	562486	562485	EFF. W/S570
C246	DRIVE AXLE CPT-ABS SPARE	PED WP	4	561610	561611	
C247	FR SERVICE CPT-ABS MODULE	WABCO	35	------	561094	
C248	DRIVE AXLE CPT-ABS	PED WP	6	561606	561607	
C249	FR SERVICE CPT-ABS/DDEC	PED WP	2	561566	561690	
C250	RH SW PANEL-B/UP CANCEL	SWF	8	------	561107	
C251	RH SW PANEL-SEAT HTR	SWF	8	------	561107	
C252	LH SW PANEL-SWITCH LT	SWF	2	------	561837	
C254	FR SERVICE JCT BOX-ABS	AMP CPC	16	561693	561695	
C255	RH CONSOLE-RADIO	AMP MNL	9	561670	561669	PRIOR REV 010
C257	ENGINE COMPT-WATER HEATER	AMP FF	6	------	561186	
C258	DRIVER GUARD WATER HTR TIMER	AMP FF	8	561188	562363	
C259	ENGINE COMPT-WATER HEATER	TC	2	561597	------	
C260	ENGINE COMPT-WATER HEATER	TC	1	561073	------	
C261	ENGINE COMPT-WATER HEATER	TC	2	561597	------	
C266	BATTERY COMPT. LTS	AMP MNL	2	561248	561247	
C267	LUGGAGE COMPT. LTS - 1	AMP MNL	2	561248	561247	
C268	LUGGAGE COMPT. LTS - 2	AMP MNL	2	561248	561247	
C269	LUGGAGE COMPT. LTS - 3 RH	AMP MNL	2	561248	561247	
C270	LUGGAGE COMPT. LTS - 3 LH	AMP MNL	2	561248	561247	
C271	LUGGAGE COMPT. LTS - 4	AMP MNL	2	561248	561247	
C272	FR SERVICE CPT LTS	AMP MNL	2	561248	561247	
C274	FR JCT PANEL-DIODES	AMP MNL	15	561987	561986	
C276	FR JCT PANEL-ALARM BUZZER	BOSCH	5	------	561183	
C281	LH CONSOLE- FR. DEST. SIGN	SWF	2	------	561837	
C282	FR. ROOF- DEST. SIGN	AMP CPC	9	561636	561637	
C290	LUGGAGE CPT-DOOR LOCK	AMP MNL	4	560851	560852	
C291	LUGGAGE CPT-DOOR LOCK	AMP MNL	4	560851	560852	
C292	LUGGAGE CPT-DOOR LOCK	AMP MNL	4	560851	560852	
C293	WIPER MOTOR	AMP FF	6	------	561186	
C294	UNDER DASH-WIPER SYST. FEED	AMP MNL	6	561552	561515	
C295	UNDER DASH-WIPER PULSE GEN.	AMP FF	6	------	561186	PRIOR REV 010
C296	FR SERVICE CPT-HEAD LTS	ITT SS	3	561111	561080	PRIOR REV 010
C298	FR LH HAT RACK-AMPLI	MOLEX	6	------	562464	PRIOR REV 010
C299	FR LH HAT RACK-AMPLI	MOLEX	10	------	562465	PRIOR REV 010
C300	FR LH HAT RACK-AMPLI	MOLEX	6	------	562464	
C301	FR LH HAT RACK-AMPLI	MOLEX	10	------	562465	
C302	UNDER DASH-FLASHER MODULE	AMP MNL	2	560900	560898	
C309	ENGINE DDEC III-ECM POWER	PED WP	5	------	562345	
C312	ENGINE DDEC III-ECM SIGNAL	PED WP	3	561781	561782	
C313	ENGINE DDEC III-OUTPUT	PED WP	4	562398	------	
C314	FR SERVICE CPT-PRESS SW KNEEL	PED WP	2	561566	561690	
C315	FR SERVICE CPT-KNEEL ALARM	PED WP	2	561566	561690	
C316	FR SERVICE CPT-KNEEL ALARM	AMP MNL	2	560900	560898	
C326	ENGINE DDEC III- MANUAL TR.	PED WP	4	561610	561611	
C364	FR ROOF-DESTINATION SIGN	AMP MNL	3	561667	561550	
C365	FR ROOF-DESTINATION SIGN	AMP MNL	2	560900	560898	
C368	FR ROOF-DEST. SIGN BALLAST	AMP MNL	3	561667	561550	
C369	FR ROOF-DEST. SIGN OPER. SW.	TORRIX	5	------	562110	
C370	FR ROOF-DEST. SIGN FLUOR.	AMP MNL	2	560900	560898	
C371	FR ROOF-DEST. SIGN FLUOR.	AMP MNL	2	560900	560898	
C372	FR ROOF-DEST. SIGN SPEED SW.	MOLEX	4	561477	561476	

NO.	LOCATION	TYPE	(NB) CAVITY	•PIN HOUSING	•SOCKET HOUSING	
C382	ENGINE GENERATOR 12 VAC RLY	PED WP	1	561605	561577	
C383	LH UNDER DASH-MICRO W/O WIRE	AMP MNL	2	561248	561247	PRIOR REV. 010
C384	LH UNDER DASH-MICRO W/O WIRE	AMP MNL	3	561550	561667	PRIOR REV. 010
C385	BATTERY COMPT. ACC.	AMP MNL	12	561735	561734	
C386	CONDENSER CPT-BYPASS VALVE	PED WP	2	561566	561590	
C387	EVAPORATOR CPT-BYPASS VALVE	PED WP	2	561566	561590	
C388	LH SW PANEL-MASTER SW	SWF	8	------	561107	
C389	EVAPORATOR CPT-WATER PUMP	PED WP	2	561566	561590	
C390	CONDENSER CPT.-A/C JCT BOX	DEUTSCH	24	562280	562283	
C391	CONDENSER CPT.-PRESS.SW	PED WP	2	561566	561590	
C394	LH OVER CONSOLE- B/U MONITOR	AMP MNL	4	560851	560852	
C395	LH OVER CONSOLE- B/U MONITOR	AMP MNL	5	------	------	
C396	HAT RACK SPEAKER	MOLEX	4	562507	562503	
C421	ENGINE CPT. WEBASTO WATER HTR	AMP FF	2	562474	562473	
C422	ENGINE CPT. WEBASTO WATER HTR	PED	2	562644	561597	
C426	ENGINE S60 RAD. FAN CLUTCH	PED WP	3	561781	561782	
C430	DRIVER GUARD WATER HTR TIMER	AMP FF	8	561188	562363	
C450	SOUND SYS. JCT. PANEL	MOLEX	4	562507	562503	
C451	WIRELESS MICRO-FIRST CPT BAG	MOLEX	2	562550	562549	
C452	UNDER DASH INSTR. PANEL	MOLEX	2	562550	562549	
C453	SOUND SYS. JCT.PANEL-VCP	PED WP	2	561566	561590	
C454	SOUND SYS.JCT.PAN.-FILT. VCP	PED WP	2	561566	561590	
C455	WIRELESS MICRO-LH HAT-RACK	CINCH	2	562554	562551	
C456	WORLD TRANSM.-RETARDER ACCUM.	PED MP	2	------	562427	
C457	WORLD TRANSM.-MAIN CONNECTOR	DEUTSCH	31	562572	562536	
C458	WORLD TRANSM.-TURBINE SP.SENS	PED MP	2	------	562426	
C459	WORLD TRANSM.-ENGINE SP.SENS.	PED MP	2	------	562426	
C460	WORLD TRANSM.-SPEED SENSOR	ITT	2	------	562541	
C461	WORLD TRANSM.-RETARDER TEMP.	PED MP	2	561566	561590	
C462	WORLD TRANSM.-RETARD SOL."K"	PED MP	2	------	562426	
C463	WORLD TRANSM.-SENSOR CONN.	DEUTSCH	16	562570	562571	
C464	FR SERVICE CPT.-DDL CONN W.T.	PED MP	12	------	562574	
C465	LH CONSOLE-SHIFTER SELECTOR	T & BET	10	------	562429	
C466	FR SERVICE CPT.-RESIS. MOD.	PED WP	3	------	562428	
C467	FR SERVICE CPT.-RESIS. MOD.	PED WP	3	------	562428	
C468	FR SERVICE CPT.-VIM MOD. W.T.	PED MP	18	------	562573	
C470	FR SERVICE CPT.-SILENT 1000	AMP MNL	2	561248	561247	
C471	FR SERVICE CPT.-SILENT 1000	AMP MNL	2	561248	561247	
C472	FR SERVICE CPT.-SILENT 1000	PED WP	2	561566	561690	
C473	FR SERVICE CPT.-SILENT 1000	AMP MNL	3	561667	561550	
C475	FR SERVICE CPT-SPEED SIGN CON	DEUTSCH	6	------	562581	
C475M	FR SERVICE CPT-SPEED SIGN M.T	DEUTSCH	6	562583	------	
C475W	FR SERVICE CPT-SPEED SIGN W.T	DEUTSCH	6	562583	------	
C500	FR JCT PANEL-PRODRIVER	MOLEX	6	562070	562069	
C501	RH CONSOLE-PRODRIVER	PED MP	7	562433	------	
C502	DRIVER GUARD PRE-HTR SW.	SWF	8	------	561107	
C503	DRIVER GUARD PRE-HTR SW.	SWF	2	------	561837	
C504	DRIVER GUARD WEBASTO TIMER	AMP FF	8	561188	562363	
C505	DRIVER GUARD ESPAR TIMER	AMP	12	------	562681	
C508	RR JCT BOX-FAN CLUTCH MOD	AMP MNL	6	561552	561515	
C510	FR SERVICE CPT-RESIST.RUN LTS	PED MP	2	561566	561690	
C511	LH CONSOLE SW-FAN CLUTCH	SWF	8	------	561107	
CA	FR SERVICE CPT-ECU WORLD TR.	T & BET	34	------	562419	

CONNECTORS CODE (C) PAGE G : 2

NO.	LOCATION	TYPE	(NB) CAVITY	•PIN HOUSING	•SOCKET HOUSING
CB	FR SERVICE CPT-ECU WORLD TR.	T & BET	34	------	562420
C541	SOUND SYS.JCT.PANEL-AUDIO SEAT SYS.	PED WP	2	561566	561690
C542	LH HAT RACK-AUDIO SEAT SYSTEM	AMP MNL	3	561667	561550
C544	SOUND SYS.JCT.PANEL-SEET AUD.	PED WP	3	561781	561782
C545	LH HAT RACK-AUDIO SEAT SYSTEM	AMP MNL	3	561667	561550
WEB1	ENGINE CPT. WEBASTO WATER HTR	AMP FF	2	562474	562643
WEB2	ENGINE CPT. WEBASTO WATER HTR	AMP FF	2	562474	562643

NO.	LOCATION	TYPE	(NB) CAVITY	•PIN HOUSING	•SOCKET HOUSING
C3	UNDER DASH-LH	AMP CPC	37	561645	561646
C7	FR SERVICE COMPT.-CLUTCH SW	ITT SS	3	561111	561080
C8	FR JCT PANEL VCR FEED	AMP MNL	2	561248	561247 PRIOR REV 010
C11	LH CONSOLE SW-MIRROR	AMP MNL	3	561667	561550
C12	LH CONSOLE SW-MIRROR HTR	AMP MNL	2	561248	561247
C13	LH CONSOLE SW-MIRROR	AMP MNL	6	561552	561515
C14	UNDER DASH LH-MIRROR	AMP MNL	9	561670	561669
C15	UNDER DASH RH-MIRROR	AMP MNL	9	561670	561669
C18	UNDER DASH-FIRE ALARM	AMP MNL	2	560900	560898
C19	UNDER DASH-A/C & HEAT SYST.	TC	10	561072	561110
C20	RR JCT BOX DIODES	AMP MNL	9	561670	561669
C21	LUGGAGE COMPT.-LOCK DOOR MOT.	PED	2	------	562076
C22	ENGINE COMPT.-CYCLOP LT	PED WP	2	561566	561690
C26	UNDER INSTRUMENT.-PANEL RHEO.	TC	2	561030	560997
C29	FR SERVICE COMPT.-VIM FEED	PED WP	3	561781	561782
C32	RH CONSOLE-DRV TEMP SENSOR	BURNDY	3	------	561104
C33	FRSERVICE COMPT. DDEC VSS	PED WP	2	561566	561690
C34	RH CONSOLE-DRV TEMP CTRL	BURNDY	6	------	561103
C35	RECIRULATED AIR GRIL.-SENSER	BURNDY	3	------	561104
C36	LH CONSOLE SW-CRUISE ON/OFF	SWF	8	------	561107
C37	LH CONSOLE SW-CRUISE SET	SWF	8	------	561107
C38	LH CONSOLE SW-CRUISE RESUME	SWF	8	------	561107
C41	UNDER DASH-FLASHER UNIT	TC	2	------	561940
C49	LAVATORY NIGHT LTS	AMP MNL	2	560900	560898
C50	RH CONSOLE-PAS. TEMP CTRL	BURNDY	6	------	561103
C51	RH CONSOLE SW-A/C & HEAT	SWF	8	------	561107
C52	ENGINE COMPT.-COMPRESSOR 05G	PED WP	2	561566	561690
C53	ENGINE COMPT.-COMPRESSOR 05G	PED WP	2	561566	561690
C54	ENGINE COMPT.-COMPRESSOR 05G	TC	1	560098	560697
C61	ENGINE COMPT.-FUEL FILTER	PED WP	2	561566	561690
C65	UNDER LH HAT RACK	MOLEX	4	561477	561476
C67	LH UNDER DASH-AMPLIF. RH SPK	BLAUPUNKT	2	561988	------
C68	LH UNDER DASH-AMPLIF. RH SPK	BLAUPUNKT	2	561988	------
C73	LH SW PANEL-MULTI FUNC. LEV.	AMP FF	8	561188	------
C74	LH SW PANEL-MULTI FUNC. LEV.	AMP FF	6	------	561108
C78	LUGGAGE COMPT.-DOOR LOCK 4 LH	AMP MNL	4	560851	560852
C79	LUGGAGE COMPT.-DOOR LOCK 4 RH	AMP MNL	4	560851	560852
C80	FR JCT PANEL-LUG. DOOR LOCK	AMP MNL	6	561552	561515
C81	LUGGAGE COMPT.-DOOR LOCK 1 LH	AMP MNL	4	560851	560852
C82	LUGGAGE COMPT.-DOOR LOCK 1 RH	AMP MNL	4	560851	560852
C83	UNDER DASH-FLASHER MODULE	TC	10	561072	561110
C84	UNDER DASH-A/C SYSTEM	TC	3	561091	561071
C85	LUGGAGE COMPT.-DOOR LOCK 3 RH	AMP MNL	4	560851	560852
C86	LUGGAGE COMPT.-DOOR LOCK 3 LH	AMP MNL	4	560851	560852
C88	RR END ROOF-CLEARANCE LTS	AMP MNL	2	560900	560898
C90	RR ROOF AUX. A/C THERMOST.	BURNDY	6	------	561103
C91	RR ROOF AUX. A/C TMP SENSOR	BURNDY	6	------	561104
C92	RR ROOF AUX. A/C FAN RH	TC	2	561030	560997
C93	RR ROOF AUX. A/C FAN LH	TC	2	561030	560997
C94	RR ROOF AUX. A/C FAN RES LH	AMP MNL	2	560900	560898
C95	RR ROOF AUX. A/C FAN RES RH	AMP MNL	2	560900	560898
C96	RR ROOF AUX. A/C LIQ SOL VAL	TC	2	561030	560997
C97	RR ROOF AUX. A/C SHUT SOL VAL	AMPHENOL	2	------	560412
C98	CONDENSER CPT.	ITT SS	4	561998	561999
C101	CONDENSER CPT.-A/C PRESS. SW	PED WP	2	561566	561690
C105	UNDER DASH RH-DRV LIQ SOL VL	TC	2	561030	560997
C106	UNDER DASH RH-DRV WTR VALVE	TC	2	561030	560997
C107	UNDER DASH RH-DRV HTR RH FAN	TC	2	561030	560997
C108	UNDER DASH RH-DRV HTR LH FAN	TC	2	561030	560997

CONNECTORS CODE (C) PAGE G : 1

NO.	LOCATION	TYPE	(NB) CAVITY	•PIN HOUSING	•SOCKET HOUSING
C111	LH CONSOLE SW-DRIVER'LTS	SWF	8	------	561107
C112	LH CONSOLE SW-GENERAL LTS	SWF	8	------	561107
C114	ENGINE DDEC-SPEED SIGNAL	PED WP	2	561566	561590
C115	RR JCT BOX-ENGINE ACCES.	DEUTSCH	40	562281	562284
C116	DRIVE AXLE COMPT.-AIR DRYER	PED MP	2	------	562251
C119	ENGINE COMPT.-LH LOWER LAMP	PED WP	6	561606	561607
C120	ENGINE COMPT.-LH LOWER LAMP	PED WP	6	561606	561607
C123	HAT RACK-BALLAST RH	AMP MNL	6	561552	561515
C124	HAT RACK-FLUORESCENT	AMP MNL	4	561551	561668
C125	HAT RACK-FLUORESCENT	AMP MNL	4	561551	561668
C126	HAT RACK-READING LTS	AMP MNL	2	560900	560898
C130	LH CONSOLE SW-READING LTS	SWF	8	------	561107
C131	LH CONSOLE SW-LUG.DOOR LOCK	SWF	8	------	561107
C132	LH CONSOLE SW-PAS & HOS CHIME	SWF	8	------	561107
C133	LH CONSOLE SW-JACOB OR RET.	SWF	8	------	561107
C134	LH CONSOLE SW-GALLEY	SWF	8	------	561107
C135	LH SW PANEL-ETHER	SWF	8	------	561107
C136	LH CONSOLE SW-MIRROR HTR	SWF	8	------	561107
C137	RH SW PANEL-HEAD LAMP	SWF	8	------	561107
C138	RH SW PANEL-SPARE	SWF	8	------	561107
C139	RH SW PANEL-FOG LAMP	SWF	8	------	561107
C140	FR JCT PANEL-BAT. HI/LO	AMP MNL	2	560900	560898
C141	ENGINE COMPT.-B/UP ALARM	PED WP	2	561566	561590
C142	FR SERVICE CPT-LH MARKER LTS	ITT SS	3	561111	561080
C143	RR LH HAT RACK-FEEDING	AMP MNL	9	561661	561662
C144	RR RH HAT RACK-FEEDING	AMP MNL	9	561661	561662
C145	RH HAT RACK-BALLAST	AMP MNL	4	560851	560852
C146	FR SERVICE CPT-RH MARKER LTS	ITT SS	3	561111	561080
C147	RR ROOF LH-EMERGENCY EXIT LTS	AMP MNL	2	560900	560898
C148	RR ROOF RH-EMERGENCY EXIT LTS	AMP MNL	2	560900	560898
C149	LH HAT RACK-BALLAST	AMP MNL	4	560851	560852
C150	FR RH HAT RACK-110V FLUOR	AMP MNL	2	561248	561247
C151	FR LH HAT RACK-110V FLUOR	AMP MNL	2	561248	561247
C152	LH HAT RACK-GENERAL LTS	AMP MNL	3	561667	561550
C153	RH HAT RACK-GENERAL LTS	AMP MNL	3	561667	561550
C154	RH SW PANEL-HAZARD	SWF	8	------	561107
C155	LH SW PANEL-FAST IDLE	SWF	8	------	561107
C156	LH SW PANEL-STP ENG. OVER.	SWF	8	------	561107
C158	RR ROOF AUX. A/C FEEDING	AMP MNL	3	561667	561550
C160	FR SERVICE CPT-INTERFACE	AMP CPC	37	561644	561646
C161	ENGINE DDEC III-ECM	PED	30	------	561600
C162	ENGINE DDEC III-ACCESSORIES	PED WP	4	561610	561611
C163	ENGINE CPT-COOLANT PROBE	PED MP	2	------	562350
C164	FR SERVICE JCT BOX	AMP CPC	22	561709	561710
C165	FR SERVICE JCT BOX	AMP CPC	16	561693	561695
C166	UNDER INSTRUMENT PANEL	AMP CPC	16	561639	561640
C167	FR SERVICE CPT-EL. FOOT PEDAL	PED WP	3	561781	561782
C168	FR SERVICE CPT-DDR	DEUTSCH	6	562360	------
C169	FR SERVICE CPT-WORLD TR. VIW	AMP CPC	16	561638	561640
C172	ENGINE COMPT-WATER TANK HEAT.	PED WP	2	561566	561690
C173	LAV.PORTABLE-WATER TANK HEAT.	AMP MNL	2	560900	560898
C175	FR SERV CPT-KNEELING FEEDING	PED WP	3	561781	561782
C177	GALLEY-REFRIGERATOR	AMP MNL	2	561248	561247

NO.	LOCATION	TYPE	(NB) CAVITY	*PIN HOUSING	*SOCKET HOUSING	
C179	RH HAT RACK-110V MONITOR	MOLEX	4	561477	561476	PRIOR REV. 010
C180	FR SERV CPT-KNEEL. DIODE	AMP MNL	9	561670	561699	
C181	FR SERV CPT-KNEELING MODULE	AMP MNL	12	561735	561734	
C182	FR SERVICE CPT-SPEED SW	AMP HDP	15	------	562012	
C184	FR SERV CPT-KNEEL. MOD. CTRL	AMP MNL	3	------	561550	
C184	FR AXLE-KNEELING PROXIMITY SW	AMP MNL	3	561667	561550	
C185	FR SERV CPT-KNEEL. MOD. EXH.	AMP MNL	3	------	561550	
C187	FR SERV CPT-KNEEL. MOD. BRK	AMP MNL	3	------	561550	
C187	FR SERVICE JCT BOX-RESISTORS	AMP MNL	6	561552	561515	
C188	LH CONSOLE SW-KNEELING	SWF	8	------	561107	
C190	FR SERVICE CPT.-WORLD TR VIM	PED WP	30	------	561600	
C192	GALLEY-FEEDING	AMP CPC	3	561862	561847	
C194	GALLEY SW-CONTAINER RH	SWF	8	------	561107	
C195	GALLEY SW-CONTAINER LH	SWF	8	------	561107	
C196	FR SERV CPT-KNEEL.	PED	2	561566	561690	
C197	FR SERV CPT-KNEEL.	PED	2	561566	561690	
C199	FR SERV. JCT BOX-SERVICE BRK	AMP MNL	3	561667	561550	
C200	LH CONSOLE SW-24V FLUOR	SWF	8	------	561107	
C201	UNDER INSTRUMENT PANEL	AMP MNL	2	560900	560898	PRIOR REV. 010
C202	UNDER INSTRUMENT PANEL	AMP CPC	9	561636	561637	
C205	LH UNDER DASH-AMPLIF. LH SPK	BLAUPUNKT	2	561988	------	
C206	RH CONSOLE-FR DEFROSTER	TC	2	561030	560997	
C207	RH CONSOLE-DRV RHEOSTAT	AMP MNL	6	561552	561515	
C208	UNDER DASH-DRV HTR MODULE	AMP MNL	9	561670	561669	
C209	UNDER DASH-DRV HTR MODULE	AMP MNL	9	561670	561669	
C210	LH UNDER DASH-AMPLIF. LH SPK	BLAUPUNKT	2	561988	------	
C211	RH CONSOLE-VCR VOLUME	AMP MNL	4	561551	561668	PRIOR REV. 010
C212	LH CONSOLE SW-VCR VIDEO	SWF	8	------	561107	PRIOR REV. 010
C213	FR ROOF-CLEARANCE LT	AMP MNL	2	560900	560898	
C214	UNDER DASH PANEL-TACHOGRAPH	V.D.O.	8	------	562041	
C215	UNDER DASH PANEL-TACHOGRAPH	V.D.O.	8	------	562043	
C216	UNDER DASH PANEL-TACHOGRAPH	AMP MNL	4	560851	560852	
C217	FR LH HAT RACK-SPEAKER	AMP MNL	4	561659	561660	
C218	FR RH HAT RACK-SPEAKER	AMP MNL	4	561659	561660	
C219	DASH RHEOSTAT-P.A. VOLUME	MOLEX	4	561477	561476	PRIOR REV. 010
C220	LH UNDER DASH-P.A. VOLUME	AMP MNL	3	561667	561550	PRIOR REV. 010
C221	LH UNDER DASH-AMPLIFIER FEED	AMP MNL	3	561550	561667	PRIOR REV. 010
C222	LH UNDER DASH-P.A. RADIO	AMP MNL	9	561670	561669	PRIOR REV. 010
C223	LH UNDER DASH-P.A. RADIO	AMP MNL	9	561670	561669	PRIOR REV. 010
C224	LH UNDER DASH-PA & RADIO FEED	AMP MNL	6	561552	561515	PRIOR REV. 010
C225	LH UNDER DASH-PA MICRO OUTLET	AMP MNL	3	561667	561550	PRIOR REV. 010
C226	LH UNDER DASH-PA MICRO OUTLET	AMP MNL	3	561667	561550	PRIOR REV. 010
C227	RH CONSOLE-SPEAKER CONTROL SW	SWF	8	------	561107	PRIOR REV. 010
C229	LH UNDER DASH-PA DRV SPEAKERS	AMP MNL	4	561551	561668	PRIOR REV. 010
C230	ENG.CPT.-FUEL PRIME PUMP SW.	PED WP	2	561566	561690	
C231	ENG.CPT.-FUEL PRIME PUMP	PED WP	2	561566	561690	
C232	UNDER L.H. CONSOLE	MOLEX	4	561477	561476	PRIOR REV. 010
C233	MICRO OUTLET SOCKET	MOLEX	4	561477	561476	PRIOR REV. 010
C234	UNDER INSTRUMENT PANEL-VDO	AMP MNL	4	560851	560852	PRIOR REV. 010
C234	UNDER INSTRUMENT PANEL-VDO	AMP FF	8	------	562363	
C235	UNDER INSTRUMENT PANEL-VDO	AMP MNL	4	560851	560852	PRIOR REV. 010
C235	UNDER INSTRUMENT PANEL-VDO	AMP FF	8	------	562363	
C236	FR SERVICE CPT CENTER-ABS	AMP CPC	14	561585	561583	
C237	FR AXLE CPT-ABS RH SENSOR	WABCO	2	641132	------	
C238	FR AXLE CPT-ABS RH VALVE	WABCO	3	------	641098	
C239	FR AXLE CPT-ABS LH VALVE	WABCO	3	------	641098	
C240	FR AXLE CPT-ABS LH SENSOR	WABCO	2	641132	------	
C241	LAST LUGGAGE CPT-ABS	PED WP	6	561606	561607	
C242	DRIVE AXLE CPT-ABS LH SENSOR	DEUTSCH	2	562486	562485	

CONNECTORS CODE (C) PAGE G : 2

NO.	LOCATION	TYPE	(NB) CAVITY	*PIN HOUSING	*SOCKET HOUSING	
C243	DRIVE AXLE CPT-ABS LH VALVE	WABCO	3	------	641098	
C244	DRIVE AXLE CPT-ABS RH VALVE	WABCO	3	------	641098	
C245	DRIVE AXLE CPT-ABS RH SENSOR	WABCO	2	641132	------	PROIR S570
C245	DRIVE AXLE CPT-ABS RH SENSOR	DEUTSCH	2	562486	562485	EFF. W/S570
C246	DRIVE AXLE CPT-ABS SPARE	PED WP	4	561610	561611	
C248	LAST LUGGAGE CPT-ABS	PED WP	6	561606	561607	
C249	FR SERVICE CPT-ABS/DDEC	PED WP	2	561566	561690	
C250	RH SW PANEL-B/UP CANCEL	SWF	8	------	561107	
C251	RH SW PANEL-SEAT HTR	SWF	8	------	561107	
C252	LH SW PANEL-SWITCH LT	SWF	2	------	561837	
C254	FR SERVICE JCT BOX-ABS	AMP CPC	16	561693	561695	
C255	RH CONSOLE-RADIO	AMP MNL	9	561670	561669	PRIOR REV 010
C257	ENGINE COMPT-WATER HEATER	AMP FF	6	------	561186	
C258	DRIVER GUARD WATER HTR TIMER	AMP FF	8	561188	562363	
C259	ENGINE COMPT-WATER HEATER	TC	2	561597	------	
C260	ENGINE COMPT-WATER HEATER	TC	1	561073	------	
C261	ENGINE COMPT-WATER HEATER	TC	2	561597	------	
C266	BATTERY COMPT. LTS	AMP MNL	2	561248	561247	
C267	LUGGAGE COMPT. LTS - 1	AMP MNL	2	561248	561247	
C268	LUGGAGE COMPT. LTS - 2	AMP MNL	2	561248	561247	
C269	LUGGAGE COMPT. LTS - 3 RH	AMP MNL	2	561248	561247	
C270	LUGGAGE COMPT. LTS - 3 LH	AMP MNL	2	561248	561247	
C271	LUGGAGE COMPT. LTS - 4	AMP MNL	2	561248	561247	
C272	FR SERVICE CPT LTS	AMP MNL	2	561248	561247	
C274	FR JCT PANEL-DIODES	AMP MNL	15	561987	561986	
C276	FR JCT PANEL-ALARM BUZZER	BOSCH	5	------	561183	
C281	LH CONSOLE- FR. DEST. SIGN	SWF	2	------	561837	
C282	FR. ROOF- DEST. SIGN	AMP CPC	9	561636	561637	
C290	LUGGAGE CPT-DOOR LOCK	AMP MNL	4	560851	560852	
C291	LUGGAGE CPT-DOOR LOCK	AMP MNL	4	560851	560852	
C292	LUGGAGE CPT-DOOR LOCK	AMP MNL	4	560851	560852	
C293	WIPER MOTOR	AMP FF	6	------	561186	
C294	UNDER DASH-WIPER SYST. FEED	AMP MNL	6	561552	561515	
C295	UNDER DASH-WIPER PULSE GEN.	AMP FF	6	------	561186	PRIOR REV 010
C296	FR SERVICE CPT-HEAD LTS	ITT SS	3	561111	561080	PRIOR REV 010
C298	FR LH HAT RACK-AMPLI	MOLEX	6	------	562464	PRIOR REV 010
C299	FR LH HAT RACK-AMPLI	MOLEX	10	------	562465	PRIOR REV 010
C300	FR LH HAT RACK-AMPLI	MOLEX	6	------	562464	
C301	FR LH HAT RACK-AMPLI	MOLEX	10	------	562465	
C302	UNDER DASH-FLASHER MODULE	AMP MNL	2	560900	560898	
C309	ENGINE DDEC III-ECM POWER	PED WP	5	------	562345	
C312	ENGINE DDEC III-ECM SIGNAL	PED WP	3	561781	561782	
C313	ENGINE DDEC III-OUTPUT	PED WP	4	562398	------	
C314	FR SERVICE CPT-PRESS SW KNEEL	PED WP	2	561566	561690	
C315	FR SERVICE CPT-KNEEL ALARM	PED WP	2	561566	561690	
C316	FR SERVICE CPT-KNEEL ALARM	AMP MNL	2	560900	560898	
C326	ENGINE DDEC III- MANUAL TR.	PED WP	4	561610	561611	
C360	ENGINE CPT.-UNLOAD TAG VALVE	PED WP	2	561566	561690	
C364	FR ROOF-DESTINATION SIGN	AMP MNL	3	561667	561550	
C365	FR ROOF-DESTINATION SIGN	AMP MNL	2	560900	560898	
C368	FR ROOF-DEST. SIGN BALLAST	AMP MNL	3	561667	561550	
C369	FR ROOF-DEST. SIGN OPER. SW.	TORRIX	5	------	562110	
C370	FR ROOF-DEST. SIGN FLUOR.	AMP MNL	2	560900	560898	
C371	FR ROOF-DEST. SIGN FLUOR.	AMP MNL	2	560900	560898	
C372	FR ROOF-DEST. SIGN SPEED SW.	MOLEX	4	561477	561476	

NO.	LOCATION	TYPE	(NB) CAVITY	•PIN HOUSING	•SOCKET HOUSING	
C382	ENGINE GENERATOR 12 VAC RLY	PED WP	1	561605	561577	
C383	LH UNDER DASH-MICRO W/O WIRE	AMP MNL	2	561248	561247	PRIOR REV. 010
C384	LH UNDER DASH-MICRO W/O WIRE	AMP MNL	3	561550	561667	PRIOR REV. 010
C385	BATTERY COMPT. ACC.	AMP MNL	12	561735	561734	
C386	CONDENSER CPT-BYPASS VALVE	PED WP	2	561566	561590	
C387	EVAPORATOR CPT-BYPASS VALVE	PED WP	2	561566	561590	
C388	LH SW PANEL-MASTER SW	SWF	8	------	561107	
C389	EVAPORATOR CPT-WATER PUMP	PED WP	2	561566	561590	
C390	CONDENSER CPT.-A/C JCT BOX	DEUTSCH	24	562280	562283	
C391	CONDENSER CPT.-PRESS.SW	PED WP	2	561566	561590	
C394	LH OVER CONSOLE- B/U MONITOR	AMP MNL	4	560851	560852	
C395	LH OVER CONSOLE- B/U MONITOR	AMP MNL	5	------	------	
C396	HAT RACK SPEAKER	MOLEX	4	562507	562503	
C421	ENGINE CPT. WEBASTO WATER HTR	AMP FF	2	562474	562473	
C422	ENGINE CPT. WEBASTO WATER HTR	PED	2	562644	561597	
C426	ENGINE S60 RAD. FAN CLUTCH	PED WP	3	561781	561782	
C430	DRIVER GUARD WATER HTR TIMER	AMP FF	8	561188	562363	
C450	SOUND SYS. JCT. PANEL	MOLEX	4	562507	562503	
C451	WIRELESS MICRO-FIRST CPT BAG	MOLEX	2	562550	562549	
C452	UNDER DASH INSTR. PANEL	MOLEX	2	562550	562549	
C453	SOUND SYS. JCT.PANEL-VCP	PED WP	2	561566	561590	
C454	SOUND SYS.JCT.PAN.-FILT. VCP	PED WP	2	561566	561590	
C455	WIRELESS MICRO-LH HAT-RACK	CINCH	2	562554	562551	
C456	WORLD TRANSM.-RETARDER ACCUM.	PED MP	2	------	562427	
C457	WORLD TRANSM.-MAIN CONNECTOR	DEUTSCH	31	562572	562536	
C458	WORLD TRANSM.-TURBINE SP.SENS	PED MP	2	------	562426	
C459	WORLD TRANSM.-ENGINE SP.SENS.	PED MP	2	------	562426	
C460	WORLD TRANSM.-SPEED SENSOR	ITT	2	------	562541	
C461	WORLD TRANSM.-RETARDER TEMP.	PED MP	2	561566	561590	
C462	WORLD TRANSM.-RETARD SOL."K"	PED MP	2	------	562426	
C463	WORLD TRANSM.-SENSOR CONN.	DEUTSCH	16	562570	562571	
C464	FR SERVICE CPT.-DDL CONN W.T.	PED MP	12	------	562574	PRIOR REV. 023
C464	FR SERVICE CPT.-DDL CONN W.T.	DEUTSCH	6	562360	------	
C465	LH CONSOLE-SHIFTER SELECTOR	T & BET	10	------	562429	PRIOR REV. 023
C465	LH CONSOLE-SHIFTER SELECTOR	PED	20	------	562825	
C466	FR SERVICE CPT.-RESIS. MOD.	PED WP	3	------	562428	
C467	FR SERVICE CPT.-RESIS. MOD.	PED WP	3	------	562428	
C468	FR SERVICE CPT.-VIM MOD. W.T.	PED MP	18	------	562573	
C470	FR SERVICE CPT.-SILENT 1000	AMP MNL	2	561248	561247	
C471	FR SERVICE CPT.-SILENT 1000	AMP MNL	2	561248	561247	
C472	FR SERVICE CPT.-SILENT 1000	PED WP	2	561566	561690	
C473	FR SERVICE CPT.-SILENT 1000	AMP MNL	3	561667	561550	
C475	FR SERVICE CPT-SPEED SIGN CON	DEUTSCH	6	------	562581	
C475M	FR SERVICE CPT-SPEED SIGN M.T	DEUTSCH	6	562583	------	
C475W	FR SERVICE CPT-SPEED SIGN W.T	DEUTSCH	6	562583	------	
C500	FR JCT PANEL-PRODRIVER	MOLEX	6	562070	562069	
C501	RH CONSOLE-PRODRIVER	PED MP	7	562433	------	
C502	DRIVER GUARD PRE-HTR SW.	SWF	8	------	561107	
C503	DRIVER GUARD PRE-HTR SW.	SWF	2	------	561837	
C504	DRIVER GUARD WEBASTO TIMER	AMP FF	8	561188	562363	
C505	DRIVER GUARD ESPAR TIMER	AMP	12	------	562681	
C506	DRIVER SEAT RH.-HOSTESS CHIME	AMP MNL	3	561667	561550	
C508	RR JCT BOX-FAN CLUTCH MOD	AMP MNL	6	561552	561515	
C510	FR SERVICE CPT-RESIST.RUN LTS	PED MP	2	561566	561690	
C511	LH CONSOLE SW-FAN CLUTCH	SWF	8	------	561107	
CS	FR SERVICE CPT-ECU WORLD TR.	PED	32	------	562817	

CONNECTORS CODE (C) PAGE G : 2

NO.	LOCATION	TYPE	(NB) CAVITY	•PIN HOUSING	•SOCKET HOUSING
CT	FR SERVICE CPT-ECU WORLD TR.	PED	32	------	562824
CV	FR SERVICE CPT-ECU WORLD TR.	PED	32	------	562823
CX1	FR SERVICE CPT-ECU ABS	AMP	18	------	562792
CX2	FR SERVICE CPT-ECU ABS	AMP	6	------	562793
CX3	FR SERVICE CPT-ECU ABS	AMP	9	------	562794
CX4	FR SERVICE CPT-ECU ABS	AMP	15	------	562795
C541	SOUND SYS.JCT.PANEL-AUDIO SEAT SYS.	PED WP	2	561566	561690
C542	LH HAT RACK-AUDIO SEAT SYSTEM	AMP MNL	3	561667	561550
C544	SOUND SYS.JCT.PANEL-SEET AUD.	PED WP	3	561781	561782
C545	LH HAT RACK-AUDIO SEAT SYSTEM	AMP MNL	3	561667	561550
WEB1	ENGINE CPT. WEBASTO WATER HTR	AMP FF	2	562474	562643
WEB2	ENGINE CPT. WEBASTO WATER HTR	AMP FF	2	562474	562643

NO.	LOCATION	TYPE	(NB) CAVITY	*PIN HOUSING	*SOCKET HOUSING
C3	UNDER DASH-LH	AMP CPC	37	561645	561646
C7	FR SERVICE COMPT.-CLUTCH SW	ITT SS	3	561111	561080
C8	FR JCT PANEL VCR FEED	AMP MNL	2	561248	561247 PRIOR REV 010
C11	LH CONSOLE SW-MIRROR	AMP MNL	3	561667	561550
C12	LH CONSOLE SW-MIRROR HTR	AMP MNL	2	561248	561247
C13	LH CONSOLE SW-MIRROR	AMP MNL	6	561552	561515
C14	UNDER DASH LH-MIRROR	AMP MNL	9	561670	561669
C15	UNDER DASH RH-MIRROR	AMP MNL	9	561670	561669
C18	UNDER DASH-FIRE ALARM	AMP MNL	2	560900	560898
C19	UNDER DASH-A/C & HEAT SYST.	TC	10	561072	561110
C20	RR JCT BOX DIODES	AMP MNL	9	561670	561669
C21	LUGGAGE COMPT.-LOCK DOOR MOT.	PED	2	------	562076
C22	ENGINE COMPT.-CYCLOP LT	PED WP	2	561566	561690
C26	UNDER INSTRUMENT.-PANEL RHEO.	TC	2	561030	560997
C29	FR SERVICE COMPT.-VIM FEED	PED WP	3	561781	561782
C32	RH CONSOLE-DRV TEMP SENSOR	BURNDY	3	------	561104
C33	FRSERVICE COMPT. DDEC VSS	PED WP	2	561566	561690
C34	RH CONSOLE-DRV TEMP CTRL	BURNDY	6	------	561103
C35	RECIRULATED AIR GRIL.-SENSER	BURNDY	3	------	561104
C36	LH CONSOLE SW-CRUISE ON/OFF	SWF	8	------	561107
C37	LH CONSOLE SW-CRUISE SET	SWF	8	------	561107
C38	LH CONSOLE SW-CRUISE RESUME	SWF	8	------	561107
C41	UNDER DASH-FLASHER UNIT	TC	2	------	561940
C49	LAVATORY NIGHT LTS	AMP MNL	2	560900	560898
C50	RH CONSOLE-PAS. TEMP CTRL	BURNDY	6	------	561103
C51	RH CONSOLE SW-A/C & HEAT	SWF	8	------	561107
C52	ENGINE COMPT.-COMPRESSOR 05G	PED WP	2	561566	561690
C53	ENGINE COMPT.-COMPRESSOR 05G	PED WP	2	561566	561690
C54	ENGINE COMPT.-COMPRESSOR 05G	TC	1	560098	560697
C61	ENGINE COMPT.-FUEL FILTER	PED WP	2	561566	561690
C65	UNDER LH HAT RACK	MOLEX	4	561477	561476
C67	LH UNDER DASH-AMPLIF. RH SPK	BLAUPUNKT	2	561988	------
C68	LH UNDER DASH-AMPLIF. RH SPK	BLAUPUNKT	2	561988	------
C73	LH SW PANEL-MULTI FUNC. LEV.	AMP FF	8	561188	------
C74	LH SW PANEL-MULTI FUNC. LEV.	AMP FF	6	------	561108
C78	LUGGAGE COMPT.-DOOR LOCK 4 LH	AMP MNL	4	560851	560852
C79	LUGGAGE COMPT.-DOOR LOCK 4 RH	AMP MNL	4	560851	560852
C80	FR JCT PANEL-LUG. DOOR LOCK	AMP MNL	6	561552	561515
C81	LUGGAGE COMPT.-DOOR LOCK 1 LH	AMP MNL	4	560851	560852
C82	LUGGAGE COMPT.-DOOR LOCK 1 RH	AMP MNL	4	560851	560852
C83	UNDER DASH-FLASHER MODULE	TC	10	561072	561110
C84	UNDER DASH-A/C SYSTEM	TC	3	561091	561071
C85	LUGGAGE COMPT.-DOOR LOCK 3 RH	AMP MNL	4	560851	560852
C86	LUGGAGE COMPT.-DOOR LOCK 3 LH	AMP MNL	4	560851	560852
C88	RR END ROOF-CLEARANCE LTS	AMP MNL	2	560900	560898
C90	RR ROOF AUX. A/C THERMOST.	BURNDY	6	------	561103
C91	RR ROOF AUX. A/C TMP SENSOR	BURNDY	6	------	561104
C92	RR ROOF AUX. A/C FAN RH	TC	2	561030	560997
C93	RR ROOF AUX. A/C FAN LH	TC	2	561030	560997
C94	RR ROOF AUX. A/C FAN RES LH	AMP MNL	2	560900	560898
C95	RR ROOF AUX. A/C FAN RES RH	AMP MNL	2	560900	560898
C96	RR ROOF AUX. A/C LIQ SOL VAL	TC	2	561030	560997
C97	RR ROOF AUX. A/C SHUT SOL VAL	AMPHENOL	2	------	560412
C98	CONDENSER CPT.	ITT SS	4	561998	561999
C101	CONDENSER CPT.-A/C PRESS. SW	PED WP	2	561566	561690
C105	UNDER DASH RH-DRV LIQ SOL VL	TC	2	561030	560997
C106	UNDER DASH RH-DRV WTR VALVE	TC	2	561030	560997
C107	UNDER DASH RH-DRV HTR RH FAN	TC	2	561030	560997
C108	UNDER DASH RH-DRV HTR LH FAN	TC	2	561030	560997

CONNECTORS CODE (C) PAGE G : 1

NO.	LOCATION	TYPE	(NB) CAVITY	*PIN HOUSING	*SOCKET HOUSING
C111	LH CONSOLE SW-DRIVER'LTS	SWF	8	------	561107
C112	LH CONSOLE SW-GENERAL LTS	SWF	8	------	561107
C114	ENGINE DDEC-SPEED SIGNAL	PED WP	2	561566	561590
C115	RR JCT BOX-ENGINE ACCES.	DEUTSCH	40	562281	562284
C116	DRIVE AXLE COMPT.-AIR DRYER	PED MP	2	------	562251
C119	ENGINE COMPT.-LH LOWER LAMP	PED WP	6	561606	561607
C120	ENGINE COMPT.-LH LOWER LAMP	PED WP	6	561606	561607
C123	HAT RACK-BALLAST RH	AMP MNL	6	561552	561515
C124	HAT RACK-FLUORESCENT	AMP MNL	4	561551	561668
C125	HAT RACK-FLUORESCENT	AMP MNL	4	561551	561668
C126	HAT RACK-READING LTS	AMP MNL	2	560900	560898
C130	LH CONSOLE SW-READING LTS	SWF	8	------	561107
C131	LH CONSOLE SW-LUG.DOOR LOCK	SWF	8	------	561107
C132	LH CONSOLE SW-PAS & HOS CHIME	SWF	8	------	561107
C133	LH CONSOLE SW-JACOB OR RET.	SWF	8	------	561107
C134	LH CONSOLE SW-GALLEY	SWF	8	------	561107
C135	LH SW PANEL-ETHER	SWF	8	------	561107
C136	LH CONSOLE SW-MIRROR HTR	SWF	8	------	561107
C137	RH SW PANEL-HEAD LAMP	SWF	8	------	561107
C138	RH SW PANEL-SPARE	SWF	8	------	561107
C139	RH SW PANEL-FOG LAMP	SWF	8	------	561107
C140	FR JCT PANEL-BAT. HI/LO	AMP MNL	2	560900	560898
C141	ENGINE COMPT.-B/UP ALARM	PED WP	2	561566	561590
C142	FR SERVICE CPT-LH MARKER LTS	ITT SS	3	561111	561080
C143	RR LH HAT RACK-FEEDING	AMP MNL	9	561661	561662
C144	RR RH HAT RACK-FEEDING	AMP MNL	9	561661	561662
C145	RH HAT RACK-BALLAST	AMP MNL	4	560851	560852
C146	FR SERVICE CPT-RH MARKER LTS	ITT SS	3	561111	561080
C147	RR ROOF LH-EMERGENCY EXIT LTS	AMP MNL	2	560900	560898
C148	RR ROOF RH-EMERGENCY EXIT LTS	AMP MNL	2	560900	560898
C149	LH HAT RACK-BALLAST	AMP MNL	4	560851	560852
C150	FR RH HAT RACK-110V FLUOR	AMP MNL	2	561248	561247
C151	FR LH HAT RACK-110V FLUOR	AMP MNL	2	561248	561247
C152	LH HAT RACK-GENERAL LTS	AMP MNL	3	561667	561550
C153	RH HAT RACK-GENERAL LTS	AMP MNL	3	561667	561550
C154	RH SW PANEL-HAZARD	SWF	8	------	561107
C155	LH SW PANEL-FAST IDLE	SWF	8	------	561107
C156	LH SW PANEL-STP ENG. OVER.	SWF	8	------	561107
C158	RR ROOF AUX. A/C FEEDING	AMP MNL	3	561667	561550
C160	FR SERVICE CPT-INTERFACE	AMP CPC	37	561644	561646
C161	ENGINE DDEC III-ECM	PED	30	------	561600
C162	ENGINE DDEC III-ACCESSORIES	PED WP	4	561610	561611
C163	ENGINE CPT-COOLANT PROBE	PED MP	2	------	562350
C164	FR SERVICE JCT BOX	AMP CPC	22	561709	561710
C165	FR SERVICE JCT BOX	AMP CPC	16	561693	561695
C166	UNDER INSTRUMENT PANEL	AMP CPC	16	561639	561640
C167	FR SERVICE CPT-EL. FOOT PEDAL	PED WP	3	561781	561782
C168	FR SERVICE CPT-DDR	DEUTSCH	6	562360	------
C169	FR SERVICE CPT-WORLD TR. VIW	AMP CPC	16	561638	561640
C172	ENGINE COMPT-WATER TANK HEAT.	PED WP	2	561566	561690
C173	LAV.PORTABLE-WATER TANK HEAT.	AMP MNL	2	560900	560898
C175	FR SERV CPT-KNEELING FEEDING	PED WP	3	561781	561782
C177	GALLEY-REFRIGERATOR	AMP MNL	2	561248	561247

NO.	LOCATION	TYPE	(NB) CAVITY	*PIN HOUSING	*SOCKET HOUSING	
C179	RH HAT RACK-110V MONITOR	MOLEX	4	561477	561476	PRIOR REV. 010
C180	FR SERV CPT-KNEEL. DIODE	AMP MNL	9	561670	561699	
C181	FR SERV CPT-KNEELING MODULE	AMP MNL	12	561735	561734	
C182	FR SERVICE CPT-SPEED SW	AMP HDP	15	------	562012	
C184	FR SERV CPT-KNEEL. MOD. CTRL	AMP MNL	3	------	561550	
C184	FR AXLE-KNEELING PROXIMITY SW	AMP MNL	3	561667	561550	
C185	FR SERV CPT-KNEEL. MOD. EXH.	AMP MNL	3	------	561550	
C187	FR SERV CPT-KNEEL. MOD. BRK	AMP MNL	3	------	561550	
C187	FR SERVICE JCT BOX-RESISTORS	AMP MNL	6	561552	561515	
C188	LH CONSOLE SW-KNEELING	SWF	8	------	561107	
C190	FR SERVICE CPT.-WORLD TR VIM	PED WP	30	------	561600	
C192	GALLEY-FEEDING	AMP CPC	3	561862	561847	
C194	GALLEY SW-CONTAINER RH	SWF	8	------	561107	
C195	GALLEY SW-CONTAINER LH	SWF	8	------	561107	
C196	FR SERV CPT-KNEEL.	PED	2	561566	561690	
C197	FR SERV CPT-KNEEL.	PED	2	561566	561690	
C199	FR SERV. JCT BOX-SERVICE BRK	AMP MNL	3	561667	561550	
C200	LH CONSOLE SW-24V FLUOR	SWF	8	------	561107	
C201	UNDER INSTRUMENT PANEL	AMP MNL	2	560900	560898	PRIOR REV. 010
C202	UNDER INSTRUMENT PANEL	AMP CPC	9	561636	561637	
C205	LH UNDER DASH-AMPLIF. LH SPK	BLAUPUNKT	2	561988	------	
C206	RH CONSOLE-FR DEFROSTER	TC	2	561030	560997	
C207	RH CONSOLE-DRV RHEOSTAT	AMP MNL	6	561552	561515	
C208	UNDER DASH-DRV HTR MODULE	AMP MNL	9	561670	561669	
C209	UNDER DASH-DRV HTR MODULE	AMP MNL	9	561670	561669	
C210	LH UNDER DASH-AMPLIF. LH SPK	BLAUPUNKT	2	561988	------	
C211	RH CONSOLE-VCR VOLUME	AMP MNL	4	561551	561668	PRIOR REV. 010
C212	LH CONSOLE SW-VCR VIDEO	SWF	8	------	561107	PRIOR REV. 010
C213	FR ROOF-CLEARANCE LT	AMP MNL	2	560900	560898	
C214	UNDER DASH PANEL-TACHOGRAPH	V.D.O.	8	------	562041	
C215	UNDER DASH PANEL-TACHOGRAPH	V.D.O.	8	------	562043	
C216	UNDER DASH PANEL-TACHOGRAPH	AMP MNL	4	560851	560852	
C217	FR LH HAT RACK-SPEAKER	AMP MNL	4	561659	561660	
C218	FR RH HAT RACK-SPEAKER	AMP MNL	4	561659	561660	
C219	DASH RHEOSTAT-P.A. VOLUME	MOLEX	4	561477	561476	PRIOR REV. 010
C220	LH UNDER DASH-P.A. VOLUME	AMP MNL	3	561667	561550	PRIOR REV. 010
C221	LH UNDER DASH-AMPLIFIER FEED	AMP MNL	3	561550	561667	PRIOR REV. 010
C222	LH UNDER DASH-P.A. RADIO	AMP MNL	9	561670	561669	PRIOR REV. 010
C223	LH UNDER DASH-P.A. RADIO	AMP MNL	9	561670	561669	PRIOR REV. 010
C224	LH UNDER DASH-PA & RADIO FEED	AMP MNL	6	561552	561515	PRIOR REV. 010
C225	LH UNDER DASH-PA MICRO OUTLET	AMP MNL	3	561667	561550	PRIOR REV. 010
C226	LH UNDER DASH-PA MICRO OUTLET	AMP MNL	3	561667	561550	PRIOR REV. 010
C227	RH CONSOLE-SPEAKER CONTROL SW	SWF	8	------	561107	PRIOR REV. 010
C229	LH UNDER DASH-PA DRV SPEAKERS	AMP MNL	4	561551	561668	PRIOR REV. 010
C230	ENG.CPT.-FUEL PRIME PUMP SW.	PED WP	2	561566	561690	
C231	ENG.CPT.-FUEL PRIME PUMP	PED WP	2	561566	561690	
C232	UNDER L.H. CONSOLE	MOLEX	4	561477	561476	PRIOR REV. 010
C233	MICRO OUTLET SOCKET	MOLEX	4	561477	561476	PRIOR REV. 010
C234	UNDER INSTRUMENT PANEL-VDO	AMP MNL	4	560851	560852	PRIOR REV. 010
C234	UNDER INSTRUMENT PANEL-VDO	AMP FF	8	------	562363	
C235	UNDER INSTRUMENT PANEL-VDO	AMP MNL	4	560851	560852	PRIOR REV. 010
C235	UNDER INSTRUMENT PANEL-VDO	AMP FF	8	------	562363	
C236	FR SERVICE CPT CENTER-ABS	AMP CPC	14	561585	561583	
C237	FR AXLE CPT-ABS RH SENSOR	WABCO	2	641132	------	
C238	FR AXLE CPT-ABS RH VALVE	WABCO	3	------	641098	
C239	FR AXLE CPT-ABS LH VALVE	WABCO	3	------	641098	
C240	FR AXLE CPT-ABS LH SENSOR	WABCO	2	641132	------	
C241	LAST LUGGAGE CPT-ABS	PED WP	6	561606	561607	
C242	DRIVE AXLE CPT-ABS LH SENSOR	DEUTSCH	2	562486	562485	

CONNECTORS CODE (C) PAGE G : 2

NO.	LOCATION	TYPE	(NB) CAVITY	*PIN HOUSING	*SOCKET HOUSING	
C243	DRIVE AXLE CPT-ABS LH VALVE	WABCO	3	------	641098	
C244	DRIVE AXLE CPT-ABS RH VALVE	WABCO	3	------	641098	
C245	DRIVE AXLE CPT-ABS RH SENSOR	WABCO	2	641132	------	PROIR S570
C245	DRIVE AXLE CPT-ABS RH SENSOR	DEUTSCH	2	562486	562485	EFF. W/S570
C246	DRIVE AXLE CPT-ABS SPARE	PED WP	4	561610	561611	
C248	LAST LUGGAGE CPT-ABS	PED WP	6	561606	561607	
C249	FR SERVICE CPT-ABS/DDEC	PED WP	2	561566	561690	
C250	RH SW PANEL-B/UP CANCEL	SWF	8	------	561107	
C251	RH SW PANEL-SEAT HTR	SWF	8	------	561107	
C252	LH SW PANEL-SWITCH LT	SWF	2	------	561837	
C254	FR SERVICE JCT BOX-ABS	AMP CPC	16	561693	561695	
C255	RH CONSOLE-RADIO	AMP MNL	9	561670	561669	PRIOR REV 010
C257	ENGINE COMPT-WATER HEATER	AMP FF	6	------	561186	
C258	DRIVER GUARD WATER HTR TIMER	AMP FF	8	561188	562363	
C259	ENGINE COMPT-WATER HEATER	TC	2	561597	------	
C260	ENGINE COMPT-WATER HEATER	TC	1	561073	------	
C261	ENGINE COMPT-WATER HEATER	TC	2	561597	------	
C266	BATTERY COMPT. LTS	AMP MNL	2	561248	561247	
C267	LUGGAGE COMPT. LTS - 1	AMP MNL	2	561248	561247	
C268	LUGGAGE COMPT. LTS - 2	AMP MNL	2	561248	561247	
C269	LUGGAGE COMPT. LTS - 3 RH	AMP MNL	2	561248	561247	
C270	LUGGAGE COMPT. LTS - 3 LH	AMP MNL	2	561248	561247	
C271	LUGGAGE COMPT. LTS - 4	AMP MNL	2	561248	561247	
C272	FR SERVICE CPT LTS	AMP MNL	2	561248	561247	
C274	FR JCT PANEL-DIODES	AMP MNL	15	561987	561986	
C276	FR JCT PANEL-ALARM BUZZER	BOSCH	5	------	561183	
C281	LH CONSOLE- FR. DEST. SIGN	SWF	2	------	561837	
C282	FR. ROOF- DEST. SIGN	AMP CPC	9	561636	561637	
C290	LUGGAGE CPT-DOOR LOCK	AMP MNL	4	560851	560852	
C291	LUGGAGE CPT-DOOR LOCK	AMP MNL	4	560851	560852	
C292	LUGGAGE CPT-DOOR LOCK	AMP MNL	4	560851	560852	
C293	WIPER MOTOR	AMP FF	6	------	561186	
C294	UNDER DASH-WIPER SYST. FEED	AMP MNL	6	561552	561515	
C295	UNDER DASH-WIPER PULSE GEN.	AMP FF	6	------	561186	PRIOR REV 010
C296	FR SERVICE CPT-HEAD LTS	ITT SS	3	561111	561080	PRIOR REV 010
C298	FR LH HAT RACK-AMPLI	MOLEX	6	------	562464	PRIOR REV 010
C299	FR LH HAT RACK-AMPLI	MOLEX	10	------	562465	PRIOR REV 010
C300	FR LH HAT RACK-AMPLI	MOLEX	6	------	562464	
C301	FR LH HAT RACK-AMPLI	MOLEX	10	------	562465	
C302	UNDER DASH-FLASHER MODULE	AMP MNL	2	560900	560898	
C309	ENGINE DDEC III-ECM POWER	PED WP	5	------	562345	
C312	ENGINE DDEC III-ECM SIGNAL	PED WP	3	561781	561782	
C313	ENGINE DDEC III-OUTPUT	PED WP	4	562398	------	
C314	FR SERVICE CPT-PRESS SW KNEEL	PED WP	2	561566	561690	
C315	FR SERVICE CPT-KNEEL ALARM	PED WP	2	561566	561690	
C316	FR SERVICE CPT-KNEEL ALARM	AMP MNL	2	560900	560898	
C326	ENGINE DDEC III- MANUAL TR.	PED WP	4	561610	561611	
C360	ENGINE CPT.-UNLOAD TAG VALVE	PED WP	2	561566	561690	
C364	FR ROOF-DESTINATION SIGN	AMP MNL	3	561667	561550	
C365	FR ROOF-DESTINATION SIGN	AMP MNL	2	560900	560898	
C368	FR ROOF-DEST. SIGN BALLAST	AMP MNL	3	561667	561550	
C369	FR ROOF-DEST. SIGN OPER. SW.	TORRIX	5	------	562110	
C370	FR ROOF-DEST. SIGN FLUOR.	AMP MNL	2	560900	560898	
C371	FR ROOF-DEST. SIGN FLUOR.	AMP MNL	2	560900	560898	
C372	FR ROOF-DEST. SIGN SPEED SW.	MOLEX	4	561477	561476	

NO.	LOCATION	TYPE	(NB) CAVITY	•PIN HOUSING	•SOCKET HOUSING	
C382	ENGINE GENERATOR 12 VAC RLY	PED WP	1	561605	561577	
C383	LH UNDER DASH-MICRO W/O WIRE	AMP MNL	2	561248	561247	PRIOR REV. 010
C384	LH UNDER DASH-MICRO W/O WIRE	AMP MNL	3	561550	561667	PRIOR REV. 010
C385	BATTERY COMPT. ACC.	AMP MNL	12	561735	561734	
C386	CONDENSER CPT-BYPASS VALVE	PED WP	2	561566	561590	
C387	EVAPORATOR CPT-BYPASS VALVE	PED WP	2	561566	561590	
C388	LH SW PANEL-MASTER SW	SWF	8	------	561107	
C389	EVAPORATOR CPT-WATER PUMP	PED WP	2	561566	561590	
C390	CONDENSER CPT.-A/C JCT BOX	DEUTSCH	24	562280	562283	
C391	CONDENSER CPT.-PRESS.SW	PED WP	2	561566	561590	
C394	LH OVER CONSOLE- B/U MONITOR	AMP MNL	4	560851	560852	
C395	LH OVER CONSOLE- B/U MONITOR	AMP MNL	5	------	------	
C396	HAT RACK SPEAKER	MOLEX	4	562507	562503	
C421	ENGINE CPT. WEBASTO WATER HTR	AMP FF	2	562474	562473	
C422	ENGINE CPT. WEBASTO WATER HTR	PED	2	562644	561597	
C426	ENGINE S60 RAD. FAN CLUTCH	PED WP	3	561781	561782	
C430	DRIVER GUARD WATER HTR TIMER	AMP FF	8	561188	562363	
C450	SOUND SYS. JCT. PANEL	MOLEX	4	562507	562503	
C451	WIRELESS MICRO-FIRST CPT BAG	MOLEX	2	562550	562549	
C452	UNDER DASH INSTR. PANEL	MOLEX	2	562550	562549	
C453	SOUND SYS. JCT.PANEL-VCP	PED WP	2	561566	561590	
C454	SOUND SYS.JCT.PAN.-FILT. VCP	PED WP	2	561566	561590	
C455	WIRELESS MICRO-LH HAT-RACK	CINCH	2	562554	562551	
C456	WORLD TRANSM.-RETARDER ACCUM.	PED MP	2	------	562427	
C457	WORLD TRANSM.-MAIN CONNECTOR	DEUTSCH	31	562572	562536	
C458	WORLD TRANSM.-TURBINE SP.SENS	PED MP	2	------	562426	
C459	WORLD TRANSM.-ENGINE SP.SENS.	PED MP	2	------	562426	
C460	WORLD TRANSM.-SPEED SENSOR	ITT	2	------	562541	
C461	WORLD TRANSM.-RETARDER TEMP.	PED MP	2	561566	561590	
C462	WORLD TRANSM.-RETARD SOL."K"	PED MP	2	------	562426	
C463	WORLD TRANSM.-SENSOR CONN.	DEUTSCH	16	562570	562571	
C464	FR SERVICE CPT.-DDL CONN W.T.	PED MP	12	------	562574	PRIOR REV. 023
C464	FR SERVICE CPT.-DDL CONN W.T.	DEUTSCH	6	562360	------	
C465	LH CONSOLE-SHIFTER SELECTOR	T & BET	10	------	562429	PRIOR REV. 023
C465	LH CONSOLE-SHIFTER SELECTOR	PED	20	------	562825	
C466	FR SERVICE CPT.-RESIS. MOD.	PED WP	3	------	562428	
C467	FR SERVICE CPT.-RESIS. MOD.	PED WP	3	------	562428	
C468	FR SERVICE CPT.-VIM MOD. W.T.	PED MP	18	------	562573	
C470	FR SERVICE CPT.-SILENT 1000	AMP MNL	2	561248	561247	
C471	FR SERVICE CPT.-SILENT 1000	AMP MNL	2	561248	561247	
C472	FR SERVICE CPT.-SILENT 1000	PED WP	2	561566	561690	
C473	FR SERVICE CPT.-SILENT 1000	AMP MNL	3	561667	561550	
C475	FR SERVICE CPT-SPEED SIGN CON	DEUTSCH	6	------	562581	
C475M	FR SERVICE CPT-SPEED SIGN M.T	DEUTSCH	6	562583	------	
C475W	FR SERVICE CPT-SPEED SIGN W.T	DEUTSCH	6	562583	------	
C500	FR JCT PANEL-PRODRIVER	MOLEX	6	562070	562069	
C501	RH CONSOLE-PRODRIVER	PED MP	7	562433	------	
C502	DRIVER GUARD PRE-HTR SW.	SWF	8	------	561107	
C503	DRIVER GUARD PRE-HTR SW.	SWF	2	------	561837	
C504	DRIVER GUARD WEBASTO TIMER	AMP FF	8	561188	562363	PRIOR REV. 025
C504	DRIVER GUARD WEBASTO TIMER	AMP	8	------	562857	
C505	DRIVER GUARD ESPAR TIMER	AMP	12	------	562681	
C506	DRIVER SEAT RH.-HOSTESS CHIME	AMP MNL	3	561667	561550	
C508	RR JCT BOX-FAN CLUTCH MOD	AMP MNL	6	561552	561515	
C510	FR SERVICE CPT-RESIST.RUN LTS	PED MP	2	561566	561690	
C511	LH CONSOLE SW-FAN CLUTCH	SWF	8	------	561107	

CONNECTORS CODE (C) PAGE G : 2

NO.	LOCATION	TYPE	(NB) CAVITY	•PIN HOUSING	•SOCKET HOUSING
C541	SOUND SYS.JCT.PANEL-AUDIO SEAT SYS.	PED WP	2	561566	561690
C542	LH HAT RACK-AUDIO SEAT SYSTEM	AMP MNL	3	561667	561550
C544	SOUND SYS.JCT.PANEL-SEET AUD.	PED WP	3	561781	561782
C545	LH HAT RACK-AUDIO SEAT SYSTEM	AMP MNL	3	561667	561550
C553	UNDER DASH R.H. - CONTROL. HEAD	MOLEX	16	------	562559
C554	UNDER DASH R.H. - CONTROL. HEAD	MOLEX	16	------	562559
C555	UNDER DASH R.H. - CONTROL. HEAD	MOLEX	16	------	562559
C556	UNDER DASH R.H. - RADIO ACC.	MOLEX	2	562550	562549
C557	UNDER DASH R.H. - RADIO ACC.	MOLEX	9	562556	562555
C558	UNDER DASH R.H. - RADIO ACC.	MOLEX	4	562507	562503
C559	L.H. HAT RACK - PASSENGER SPK.	MOLEX	4	562507	562503
C560	SOUND SYS.JCT.PANEL- POW.AMPLI	MOLEX	4	562507	562503
C561	L.H. HAT RACK- WIRELESS MICRO	MOLEX	4	562507	562503
C562	L.H. HAT RACK - VCP	MOLEX	9	562556	562555
C563	L.H MODESTY PANEL- DRIVERS SPK.	MOLEX	4	562507	562503
C564	L.H MODESTY PANEL - MICRO	MOLEX	4	562507	562503
C565	R.H MODESTY PANEL - MICRO	MOLEX	4	562507	562503
C566	L.H. CONSOLE - BOOM MICRO	MOLEX	4	562507	562503
C567	L.H. CONSOLE - DRIVERS MICRO	MOLEX	4	562507	562503
C568	SOUND SYS. JCT. PANEL- PASS. SPK	CINCH	4	562553	562552
C569	SOUND SYS.JCT.PANEL- POWER AMPLI.	MOLEX	9	562556	562555
CS	FR SERVICE CPT-ECU WORLD TR.	PED	32	------	562817
CT	FR SERVICE CPT-ECU WORLD TR.	PED	32	------	562824
CV	FR SERVICE CPT-ECU WORLD TR.	PED	32	------	562823
CX1	FR SERVICE CPT-ECU ABS	AMP	18	------	562792
CX2	FR SERVICE CPT-ECU ABS	AMP	6	------	562793
CX3	FR SERVICE CPT-ECU ABS	AMP	9	------	562794
CX4	FR SERVICE CPT-ECU ABS	AMP	15	------	562795
WEB1	ENGINE CPT. WEBASTO WATER HTR	AMP FF	2	562474	562643
WEB2	ENGINE CPT. WEBASTO WATER HTR	AMP FF	2	562474	562643

NO.	LOCATION	TYPE	(NB) CAVITY	•PIN HOUSING	•SOCKET HOUSING
C3	UNDER DASH-LH	AMP CPC	37	561645	561646
C7	FR SERVICE COMPT.-CLUTCH SW	ITT SS	3	561111	561080
C8	FR JCT PANEL VCR FEED	AMP MNL	2	561248	561247 PRIOR REV 010
C11	LH CONSOLE SW-MIRROR	AMP MNL	3	561667	561550
C12	LH CONSOLE SW-MIRROR HTR	AMP MNL	2	561248	561247
C13	LH CONSOLE SW-MIRROR	AMP MNL	6	561552	561515
C14	UNDER DASH LH-MIRROR	AMP MNL	9	561670	561669
C15	UNDER DASH RH-MIRROR	AMP MNL	9	561670	561669
C18	UNDER DASH-FIRE ALARM	AMP MNL	2	560900	560898
C19	UNDER DASH-A/C & HEAT SYST.	TC	10	561072	561110
C20	RR JCT BOX DIODES	AMP MNL	9	561670	561669
C21	LUGGAGE COMPT.-LOCK DOOR MOT.	PED	2	------	562076
C22	ENGINE COMPT.-CYCLOP LT	PED WP	2	561566	561690
C26	UNDER INSTRUMENT.-PANEL RHEO.	TC	2	561030	560997
C29	FR SERVICE COMPT.-VIM FEED	PED WP	3	561781	561782
C32	RH CONSOLE-DRV TEMP SENSOR	BURNDY	3	------	561104
C33	FRSERVICE COMPT. DDEC VSS	PED WP	2	561566	561690
C34	RH CONSOLE-DRV TEMP CTRL	BURNDY	6	------	561103
C35	RECIRULATED AIR GRIL.-SENSER	BURNDY	3	------	561104
C36	LH CONSOLE SW-CRUISE ON/OFF	SWF	8	------	561107
C37	LH CONSOLE SW-CRUISE SET	SWF	8	------	561107
C38	LH CONSOLE SW-CRUISE RESUME	SWF	8	------	561107
C41	UNDER DASH-FLASHER UNIT	TC	2	------	561940
C49	LAVATORY NIGHT LTS	AMP MNL	2	560900	560898
C50	RH CONSOLE-PAS. TEMP CTRL	BURNDY	6	------	561103
C51	RH CONSOLE SW-A/C & HEAT	SWF	8	------	561107
C52	ENGINE COMPT.-COMPRESSOR 05G	PED WP	2	561566	561690
C53	ENGINE COMPT.-COMPRESSOR 05G	PED WP	2	561566	561690
C54	ENGINE COMPT.-COMPRESSOR 05G	TC	1	560098	560697
C61	ENGINE COMPT.-FUEL FILTER	PED WP	2	561566	561690
C65	UNDER LH HAT RACK	MOLEX	4	561477	561476
C67	LH UNDER DASH-AMPLIF. RH SPK	BLAUPUNKT	2	561988	------
C68	LH UNDER DASH-AMPLIF. RH SPK	BLAUPUNKT	2	561988	------
C73	LH SW PANEL-MULTI FUNC. LEV.	AMP FF	8	561188	------
C74	LH SW PANEL-MULTI FUNC. LEV.	AMP FF	6	------	561108
C78	LUGGAGE COMPT.-DOOR LOCK 4 LH	AMP MNL	4	560851	560852
C79	LUGGAGE COMPT.-DOOR LOCK 4 RH	AMP MNL	4	560851	560852
C80	FR JCT PANEL-LUG. DOOR LOCK	AMP MNL	6	561552	561515
C81	LUGGAGE COMPT.-DOOR LOCK 1 LH	AMP MNL	4	560851	560852
C82	LUGGAGE COMPT.-DOOR LOCK 1 RH	AMP MNL	4	560851	560852
C83	UNDER DASH-FLASHER MODULE	TC	10	561072	561110
C84	UNDER DASH-A/C SYSTEM	TC	3	561091	561071
C85	LUGGAGE COMPT.-DOOR LOCK 3 RH	AMP MNL	4	560851	560852
C86	LUGGAGE COMPT.-DOOR LOCK 3 LH	AMP MNL	4	560851	560852
C88	RR END ROOF-CLEARANCE LTS	AMP MNL	2	560900	560898
C90	RR ROOF AUX. A/C THERMOST.	BURNDY	6	------	561103
C91	RR ROOF AUX. A/C TMP SENSOR	BURNDY	6	------	561104
C92	RR ROOF AUX. A/C FAN RH	TC	2	561030	560997
C93	RR ROOF AUX. A/C FAN LH	TC	2	561030	560997
C94	RR ROOF AUX. A/C FAN RES LH	AMP MNL	2	560900	560898
C95	RR ROOF AUX. A/C FAN RES RH	AMP MNL	2	560900	560898
C96	RR ROOF AUX. A/C LIQ SOL VAL	TC	2	561030	560997
C97	RR ROOF AUX. A/C SHUT SOL VAL	AMPHENOL	2	------	560412
C98	CONDENSER CPT.	ITT SS	4	561998	561999
C101	CONDENSER CPT.-A/C PRESS. SW	PED WP	2	561566	561690
C105	UNDER DASH RH-DRV LIQ SOL VL	TC	2	561030	560997
C106	UNDER DASH RH-DRV WTR VALVE	TC	2	561030	560997
C107	UNDER DASH RH-DRV HTR RH FAN	TC	2	561030	560997
C108	UNDER DASH RH-DRV HTR LH FAN	TC	2	561030	560997

CONNECTORS CODE (C) PAGE G : 1

NO.	LOCATION	TYPE	(NB) CAVITY	•PIN HOUSING	•SOCKET HOUSING
C111	LH CONSOLE SW-DRIVER'LTS	SWF	8	------	561107
C112	LH CONSOLE SW-GENERAL LTS	SWF	8	------	561107
C114	ENGINE DDEC-SPEED SIGNAL	PED WP	2	561566	561590
C115	RR JCT BOX-ENGINE ACCES.	DEUTSCH	40	562281	562284
C116	DRIVE AXLE COMPT.-AIR DRYER	PED MP	2	------	562251
C119	ENGINE COMPT.-LH LOWER LAMP	PED WP	6	561606	561607
C120	ENGINE COMPT.-LH LOWER LAMP	PED WP	6	561606	561607
C123	HAT RACK-BALLAST RH	AMP MNL	6	561552	561515
C124	HAT RACK-FLUORESCENT	AMP MNL	4	561551	561668
C125	HAT RACK-FLUORESCENT	AMP MNL	4	561551	561668
C126	HAT RACK-READING LTS	AMP MNL	2	560900	560898
C130	LH CONSOLE SW-READING LTS	SWF	8	------	561107
C131	LH CONSOLE SW-LUG.DOOR LOCK	SWF	8	------	561107
C132	LH CONSOLE SW-PAS & HOS CHIME	SWF	8	------	561107
C133	LH CONSOLE SW-JACOB OR RET.	SWF	8	------	561107
C134	LH CONSOLE SW-GALLEY	SWF	8	------	561107
C135	LH SW PANEL-ETHER	SWF	8	------	561107
C136	LH CONSOLE SW-MIRROR HTR	SWF	8	------	561107
C137	RH SW PANEL-HEAD LAMP	SWF	8	------	561107
C138	RH SW PANEL-SPARE	SWF	8	------	561107
C139	RH SW PANEL-FOG LAMP	SWF	8	------	561107
C140	FR JCT PANEL-BAT. HI/LO	AMP MNL	2	560900	560898
C141	ENGINE COMPT.-B/UP ALARM	PED WP	2	561566	561590
C142	FR SERVICE CPT-LH MARKER LTS	ITT SS	3	561111	561080
C143	RR LH HAT RACK-FEEDING	AMP MNL	9	561661	561662
C144	RR RH HAT RACK-FEEDING	AMP MNL	9	561661	561662
C145	RH HAT RACK-BALLAST	AMP MNL	4	560851	560852
C146	FR SERVICE CPT-RH MARKER LTS	ITT SS	3	561111	561080
C147	RR ROOF LH-EMERGENCY EXIT LTS	AMP MNL	2	560900	560898
C148	RR ROOF RH-EMERGENCY EXIT LTS	AMP MNL	2	560900	560898
C149	LH HAT RACK-BALLAST	AMP MNL	4	560851	560852
C150	FR RH HAT RACK-110V FLUOR	AMP MNL	2	561248	561247
C151	FR LH HAT RACK-110V FLUOR	AMP MNL	2	561248	561247
C152	LH HAT RACK-GENERAL LTS	AMP MNL	3	561667	561550
C153	RH HAT RACK-GENERAL LTS	AMP MNL	3	561667	561550
C154	RH SW PANEL-HAZARD	SWF	8	------	561107
C155	LH SW PANEL-FAST IDLE	SWF	8	------	561107
C156	LH SW PANEL-STP ENG. OVER.	SWF	8	------	561107
C158	RR ROOF AUX. A/C FEEDING	AMP MNL	3	561667	561550
C160	FR SERVICE CPT-INTERFACE	AMP CPC	37	561644	561646
C161	ENGINE DDEC III-ECM	PED	30	------	561600
C162	ENGINE DDEC III-ACCESSORIES	PED WP	4	561610	561611
C163	ENGINE CPT-COOLANT PROBE	PED MP	2	------	562350
C164	FR SERVICE JCT BOX	AMP CPC	22	561709	561710
C165	FR SERVICE JCT BOX	AMP CPC	16	561693	561695
C166	UNDER INSTRUMENT PANEL	AMP CPC	16	561639	561640
C167	FR SERVICE CPT-EL. FOOT PEDAL	PED WP	3	561781	561782
C168	FR SERVICE CPT-DDR	DEUTSCH	6	562360	------
C169	FR SERVICE CPT-WORLD TR. VIW	AMP CPC	16	561638	561640
C172	ENGINE COMPT-WATER TANK HEAT.	PED WP	2	561566	561690
C173	LAV.PORTABLE-WATER TANK HEAT.	AMP MNL	2	560900	560898
C175	FR SERV CPT-KNEELING FEEDING	PED WP	3	561781	561782
C177	GALLEY-REFRIGERATOR	AMP MNL	2	561248	561247

NO.	LOCATION	TYPE	(NB) CAVITY	•PIN HOUSING	•SOCKET HOUSING
C179	RH HAT RACK-110V MONITOR	MOLEX	4	561477	561476 PRIOR REV. 010
C180	FR SERV CPT-KNEEL. DIODE	AMP MNL	9	561670	561699
C181	FR SERV CPT-KNEELING MODULE	AMP MNL	12	561735	561734
C182	FR SERVICE CPT-SPEED SW	AMP HDP	15	------	562012
C184	FR SERV CPT-KNEEL. MOD. CTRL	AMP MNL	3	------	561550
C184	FR AXLE-KNEELING PROXIMITY SW	AMP MNL	3	561667	561550
C185	FR SERV CPT-KNEEL. MOD. EXH.	AMP MNL	3	------	561550
C187	FR SERV CPT-KNEEL. MOD. BRK	AMP MNL	3	------	561550
C187	FR SERVICE JCT BOX-RESISTORS	AMP MNL	6	561552	561515
C188	LH CONSOLE SW-KNEELING	SWF	8	------	561107
C190	FR SERVICE CPT.-WORLD TR VIM	PED WP	30	------	561600
C192	GALLEY-FEEDING	AMP CPC	3	561862	561847
C194	GALLEY SW-CONTAINER RH	SWF	8	------	561107
C195	GALLEY SW-CONTAINER LH	SWF	8	------	561107
C196	FR SERV CPT-KNEEL.	PED	2	561566	561690
C197	FR SERV CPT-KNEEL.	PED	2	561566	561690
C199	FR SERV. JCT BOX-SERVICE BRK	AMP MNL	3	561667	561550
C200	LH CONSOLE SW-24V FLUOR	SWF	8	------	561107
C201	UNDER INSTRUMENT PANEL	AMP MNL	2	560900	560898 PRIOR REV. 010
C202	UNDER INSTRUMENT PANEL	AMP CPC	9	561636	561637
C205	LH UNDER DASH-AMPLIF. LH SPK	BLAUPUNKT	2	561988	------
C206	RH CONSOLE-FR DEFROSTER	TC	2	561030	560997
C207	RH CONSOLE-DRV RHEOSTAT	AMP MNL	6	561552	561515
C208	UNDER DASH-DRV HTR MODULE	AMP MNL	9	561670	561669
C209	UNDER DASH-DRV HTR MODULE	AMP MNL	9	561670	561669
C210	LH UNDER DASH-AMPLIF. LH SPK	BLAUPUNKT	2	561988	------
C211	RH CONSOLE-VCR VOLUME	AMP MNL	4	561551	561668 PRIOR REV. 010
C212	LH CONSOLE SW-VCR VIDEO	SWF	8	------	561107 PRIOR REV. 010
C213	FR ROOF-CLEARANCE LT	AMP MNL	2	560900	560898
C214	UNDER DASH PANEL-TACHOGRAPH	V.D.O.	8	------	562041
C215	UNDER DASH PANEL-TACHOGRAPH	V.D.O.	8	------	562043
C216	UNDER DASH PANEL-TACHOGRAPH	AMP MNL	4	560851	560852
C217	FR LH HAT RACK-SPEAKER	AMP MNL	4	561659	561660
C218	FR RH HAT RACK-SPEAKER	AMP MNL	4	561659	561660
C219	DASH RHEOSTAT-P.A. VOLUME	MOLEX	4	561477	561476 PRIOR REV. 010
C220	LH UNDER DASH-P.A. VOLUME	AMP MNL	3	561667	561550 PRIOR REV. 010
C221	LH UNDER DASH-AMPLIFIER FEED	AMP MNL	3	561550	561667 PRIOR REV. 010
C222	LH UNDER DASH-P.A. RADIO	AMP MNL	9	561670	561669 PRIOR REV. 010
C223	LH UNDER DASH-P.A. RADIO	AMP MNL	9	561670	561669 PRIOR REV. 010
C224	LH UNDER DASH-PA & RADIO FEED	AMP MNL	6	561552	561515 PRIOR REV. 010
C225	LH UNDER DASH-PA MICRO OUTLET	AMP MNL	3	561667	561550 PRIOR REV. 010
C226	LH UNDER DASH-PA MICRO OUTLET	AMP MNL	3	561667	561550 PRIOR REV. 010
C227	RH CONSOLE-SPEAKER CONTROL SW	SWF	8	------	561107 PRIOR REV. 010
C229	LH UNDER DASH-PA DRV SPEAKERS	AMP MNL	4	561551	561668 PRIOR REV. 010
C230	ENG.CPT.-FUEL PRIME PUMP SW.	PED WP	2	561566	561690
C231	ENG.CPT.-FUEL PRIME PUMP	PED WP	2	561566	561690
C232	UNDER L.H. CONSOLE	MOLEX	4	561477	561476 PRIOR REV. 010
C233	MICRO OUTLET SOCKET	MOLEX	4	561477	561476 PRIOR REV. 010
C234	UNDER INSTRUMENT PANEL-VDO	AMP MNL	4	560851	560852 PRIOR REV. 010
C234	UNDER INSTRUMENT PANEL-VDO	AMP FF	8	------	562363
C235	UNDER INSTRUMENT PANEL-VDO	AMP MNL	4	560851	560852 PRIOR REV. 010
C235	UNDER INSTRUMENT PANEL-VDO	AMP FF	8	------	562363
C236	FR SERVICE CPT CENTER-ABS	AMP CPC	14	561585	561583
C237	FR AXLE CPT-ABS RH SENSOR	WABCO	2	641132	------
C238	FR AXLE CPT-ABS RH VALVE	WABCO	3	------	641098
C239	FR AXLE CPT-ABS LH VALVE	WABCO	3	------	641098
C240	FR AXLE CPT-ABS LH SENSOR	WABCO	2	641132	------
C241	LAST LUGGAGE CPT-ABS	PED WP	6	561606	561607
C242	DRIVE AXLE CPT-ABS LH SENSOR	WABCO	2	641132	

CONNECTORS CODE (C) PAGE G : 2

NO.	LOCATION	TYPE	(NB) CAVITY	•PIN HOUSING	•SOCKET HOUSING
C243	DRIVE AXLE CPT-ABS LH VALVE	WABCO	3	------	641098
C244	DRIVE AXLE CPT-ABS RH VALVE	WABCO	3	------	641098
C245	DRIVE AXLE CPT-ABS RH SENSOR	WABCO	2	641132	------
C246	DRIVE AXLE CPT-ABS SPARE	PED WP	4	561610	561611
C248	LAST LUGGAGE CPT-ABS	PED WP	6	561606	561607
C249	FR SERVICE CPT-ABS/DDEC	PED WP	2	561566	561690
C250	RH SW PANEL-B/UP CANCEL	SWF	8	------	561107
C251	RH SW PANEL-SEAT HTR	SWF	8	------	561107
C252	LH SW PANEL-SWITCH LT	SWF	2	------	561837
C254	FR SERVICE JCT BOX-ABS	AMP CPC	16	561693	561695
C255	RH CONSOLE-RADIO	AMP MNL	9	561670	561669 PRIOR REV 010
C257	ENGINE COMPT-WATER HEATER	AMP FF	6	------	561186
C258	DRIVER GUARD WATER HTR TIMER	AMP FF	8	561188	562363
C259	ENGINE COMPT-WATER HEATER	TC	2	561597	------
C260	ENGINE COMPT-WATER HEATER	TC	1	561073	------
C261	ENGINE COMPT-WATER HEATER	TC	2	561597	------
C266	BATTERY COMPT. LTS	AMP MNL	2	561248	561247
C267	LUGGAGE COMPT. LTS - 1	AMP MNL	2	561248	561247
C268	LUGGAGE COMPT. LTS - 2	AMP MNL	2	561248	561247
C269	LUGGAGE COMPT. LTS - 3 RH	AMP MNL	2	561248	561247
C270	LUGGAGE COMPT. LTS - 3 LH	AMP MNL	2	561248	561247
C271	LUGGAGE COMPT. LTS - 4	AMP MNL	2	561248	561247
C272	FR SERVICE CPT LTS	AMP MNL	2	561248	561247
C274	FR JCT PANEL-DIODES	AMP MNL	15	561987	561986
C276	FR JCT PANEL-ALARM BUZZER	BOSCH	5	------	561183
C281	LH CONSOLE- FR. DEST. SIGN	SWF	2	------	561837
C282	FR. ROOF- DEST. SIGN	AMP CPC	9	561636	561637
C290	LUGGAGE CPT-DOOR LOCK	AMP MNL	4	560851	560852
C291	LUGGAGE CPT-DOOR LOCK	AMP MNL	4	560851	560852
C292	LUGGAGE CPT-DOOR LOCK	AMP MNL	4	560851	560852
C293	WIPER MOTOR	AMP FF	6	------	561186
C294	UNDER DASH-WIPER SYST. FEED	AMP MNL	6	561552	561515
C295	UNDER DASH-WIPER PULSE GEN.	AMP FF	6	------	561186 PRIOR REV 010
C296	FR SERVICE CPT-HEAD LTS	ITT SS	3	561111	561080 PRIOR REV 010
C298	FR LH HAT RACK-AMPLI	MOLEX	6	------	562464 PRIOR REV 010
C299	FR LH HAT RACK-AMPLI	MOLEX	10	------	562465 PRIOR REV 010
C300	FR LH HAT RACK-AMPLI	MOLEX	6	------	562464
C301	FR LH HAT RACK-AMPLI	MOLEX	10	------	562465
C302	UNDER DASH-FLASHER MODULE	AMP MNL	2	560900	560898
C309	ENGINE DDEC III-ECM POWER	PED WP	5	------	562345
C312	ENGINE DDEC III-ECM SIGNAL	PED WP	3	561781	561782
C313	ENGINE DDEC III-OUTPUT	PED WP	4	562398	------
C314	FR SERVICE CPT-PRESS SW KNEEL	PED WP	2	561566	561690
C315	FR SERVICE CPT-KNEEL ALARM	PED WP	2	561566	561690
C316	FR SERVICE CPT-KNEEL ALARM	AMP MNL	2	560900	560898
C326	ENGINE DDEC III- MANUAL TR.	PED WP	4	561610	561611
C360	ENGINE CPT.-UNLOAD TAG VALVE	PED WP	2	561566	561690
C364	FR ROOF-DESTINATION SIGN	AMP MNL	3	561667	561550
C365	FR ROOF-DESTINATION SIGN	AMP MNL	2	560900	560898
C368	FR ROOF-DEST. SIGN BALLAST	AMP MNL	3	561667	561550
C369	FR ROOF-DEST. SIGN OPER. SW.	TORRIX	5	------	562110
C370	FR ROOF-DEST. SIGN FLUOR.	AMP MNL	2	560900	560898
C371	FR ROOF-DEST. SIGN FLUOR.	AMP MNL	2	560900	560898
C372	FR ROOF-DEST. SIGN SPEED SW.	MOLEX	4	561477	561476

NO.	LOCATION	TYPE	(NB) CAVITY	•PIN HOUSING	•SOCKET HOUSING	
C382	ENGINE GENERATOR 12 VAC RLY	PED WP	1	561605	561577	
C383	LH UNDER DASH-MICRO W/O WIRE	AMP MNL	2	561248	561247	PRIOR REV. 010
C384	LH UNDER DASH-MICRO W/O WIRE	AMP MNL	3	561550	561667	PRIOR REV. 010
C385	BATTERY COMPT. ACC.	AMP MNL	12	561735	561734	
C386	CONDENSER CPT-BYPASS VALVE	PED WP	2	561566	561590	
C387	EVAPORATOR CPT-BYPASS VALVE	PED WP	2	561566	561590	
C388	LH SW PANEL-MASTER SW	SWF	8	------	561107	
C389	EVAPORATOR CPT-WATER PUMP	PED WP	2	561566	561590	
C390	CONDENSER CPT.-A/C JCT BOX	DEUTSCH	24	562280	562283	
C391	CONDENSER CPT.-PRESS.SW	PED WP	2	561566	561590	
C394	LH OVER CONSOLE- B/U MONITOR	AMP MNL	4	560851	560852	
C395	LH OVER CONSOLE- B/U MONITOR	AMP MNL	5	------	------	
C396	HAT RACK SPEAKER	MOLEX	4	562507	562503	
C421	ENGINE CPT. WEBASTO WATER HTR	AMP FF	2	562474	562473	
C422	ENGINE CPT. WEBASTO WATER HTR	PED	2	562644	561597	
C426	ENGINE S60 RAD. FAN CLUTCH	PED WP	3	561781	561782	
C430	DRIVER GUARD WATER HTR TIMER	AMP FF	8	561188	562363	
C450	SOUND SYS. JCT. PANEL	MOLEX	4	562507	562503	
C451	WIRELESS MICRO-FIRST CPT BAG	MOLEX	2	562550	562549	
C452	UNDER DASH INSTR. PANEL	MOLEX	2	562550	562549	
C453	SOUND SYS. JCT.PANEL-VCP	PED WP	2	561566	561590	
C454	SOUND SYS.JCT.PAN.-FILT. VCP	PED WP	2	561566	561590	
C455	WIRELESS MICRO-LH HAT-RACK	CINCH	2	562554	562551	
C456	WORLD TRANSM.-RETARDER ACCUM.	PED MP	2	------	562427	
C457	WORLD TRANSM.-MAIN CONNECTOR	DEUTSCH	31	562572	562536	
C458	WORLD TRANSM.-TURBINE SP.SENS	PED MP	2	------	562426	
C459	WORLD TRANSM.-ENGINE SP.SENS.	PED MP	2	------	562426	
C460	WORLD TRANSM.-SPEED SENSOR	ITT	2	------	562541	
C461	WORLD TRANSM.-RETARDER TEMP.	PED MP	2	561566	561590	
C462	WORLD TRANSM.-RETARD SOL."K"	PED MP	2	------	562426	
C463	WORLD TRANSM.-SENSOR CONN.	DEUTSCH	16	562570	562571	
C464	FR SERVICE CPT.-DDL CONN W.T.	PED MP	12	------	562574	PRIOR REV. 023
C464	FR SERVICE CPT.-DDL CONN W.T.	DEUTSCH	6	562360	------	
C465	LH CONSOLE-SHIFTER SELECTOR	T & BET	10	------	562429	PRIOR REV. 023
C465	LH CONSOLE-SHIFTER SELECTOR	PED	20	------	562825	
C466	FR SERVICE CPT.-RESIS. MOD.	PED WP	3	------	562428	
C467	FR SERVICE CPT.-RESIS. MOD.	PED WP	3	------	562428	
C468	FR SERVICE CPT.-VIM MOD. W.T.	PED MP	18	------	562573	
C470	FR SERVICE CPT.-SILENT 1000	AMP MNL	2	561248	561247	
C471	FR SERVICE CPT.-SILENT 1000	AMP MNL	2	561248	561247	
C472	FR SERVICE CPT.-SILENT 1000	PED WP	2	561566	561690	
C473	FR SERVICE CPT.-SILENT 1000	AMP MNL	3	561667	561550	
C475	FR SERVICE CPT-SPEED SIGN CON	DEUTSCH	6	------	562581	
C475M	FR SERVICE CPT-SPEED SIGN M.T	DEUTSCH	6	562583	------	
C475W	FR SERVICE CPT-SPEED SIGN W.T	DEUTSCH	6	562583	------	
C500	FR JCT PANEL-PRODRIVER	MOLEX	6	562070	562069	
C501	RH CONSOLE-PRODRIVER	PED MP	7	562433	------	
C502	DRIVER GUARD PRE-HTR SW.	SWF	8	------	561107	
C503	DRIVER GUARD PRE-HTR SW.	SWF	2	------	561837	
C504	DRIVER GUARD WEBASTO TIMER	AMP FF	8	561188	562363	
C505	DRIVER GUARD ESPAR TIMER	AMP	12	------	562681	
C506	DRIVER SEAT RH.-HOSTESS CHIME	AMP MNL	3	561667	561550	
C508	RR JCT BOX-FAN CLUTCH MOD	AMP MNL	6	561552	561515	
C510	FR SERVICE CPT-RESIST.RUN LTS	PED MP	2	561566	561690	
C511	LH CONSOLE SW-FAN CLUTCH	SWF	8	------	561107	
CS	FR SERVICE CPT-ECU WORLD TR.	PED	32	------	562817	

CONNECTORS CODE (C) PAGE G : 2

NO.	LOCATION	TYPE	(NB) CAVITY	•PIN HOUSING	•SOCKET HOUSING
CT	FR SERVICE CPT-ECU WORLD TR.	PED	32	------	562824
CV	FR SERVICE CPT-ECU WORLD TR.	PED	32	------	562823
CX1	FR SERVICE CPT-ECU ABS	AMP	18	------	562792
CX2	FR SERVICE CPT-ECU ABS	AMP	6	------	562793
CX3	FR SERVICE CPT-ECU ABS	AMP	9	------	562794
CX4	FR SERVICE CPT-ECU ABS	AMP	15	------	562795
C541	SOUND SYS.JCT.PANEL-AUDIO SEAT SYS.	PED WP	2	561566	561690
C542	LH HAT RACK-AUDIO SEAT SYSTEM	AMP MNL	3	561667	561550
C544	SOUND SYS.JCT.PANEL-SEET AUD.	PED WP	3	561781	561782
C545	LH HAT RACK-AUDIO SEAT SYSTEM	AMP MNL	3	561667	561550
WEB1	ENGINE CPT. WEBASTO WATER HTR	AMP FF	2	562474	562643
WEB2	ENGINE CPT. WEBASTO WATER HTR	AMP FF	2	562474	562643

NO.	LOCATION	TYPE	(NB) CAVITY	*PIN HOUSING	*SOCKET HOUSING
C3	UNDER DASH-LH	AMP CPC	37	561645	561646
C7	FR SERVICE COMPT.-CLUTCH SW	ITT SS	3	561111	561080
C8	FR JCT PANEL VCR FEED	AMP MNL	2	561248	561247 PRIOR REV 010
C11	LH CONSOLE SW-MIRROR	AMP MNL	3	561667	561550
C12	LH CONSOLE SW-MIRROR HTR	AMP MNL	2	561248	561247
C13	LH CONSOLE SW-MIRROR	AMP MNL	6	561552	561515
C14	UNDER DASH LH-MIRROR	AMP MNL	9	561670	561669
C15	UNDER DASH RH-MIRROR	AMP MNL	9	561670	561669
C18	UNDER DASH-FIRE ALARM	AMP MNL	2	560900	560898
C19	UNDER DASH-A/C & HEAT SYST.	TC	10	561072	561110
C20	RR JCT BOX DIODES	AMP MNL	9	561670	561669
C21	LUGGAGE COMPT.-LOCK DOOR MOT.	PED	2	------	562076
C22	ENGINE COMPT.-CYCLOP LT	PED WP	2	561566	561690
C26	UNDER INSTRUMENT.-PANEL RHEO.	TC	2	561030	560997
C29	FR SERVICE COMPT.-VIM FEED	PED WP	3	561781	561782
C32	RH CONSOLE-DRV TEMP SENSOR	BURNDY	3	------	561104
C33	FRSERVICE COMPT. DDEC VSS	PED WP	2	561566	561690
C34	RH CONSOLE-DRV TEMP CTRL	BURNDY	6	------	561103
C35	RECIRULATED AIR GRIL.-SENSER	BURNDY	3	------	561104
C36	LH CONSOLE SW-CRUISE ON/OFF	SWF	8	------	561107
C37	LH CONSOLE SW-CRUISE SET	SWF	8	------	561107
C38	LH CONSOLE SW-CRUISE RESUME	SWF	8	------	561107
C41	UNDER DASH-FLASHER UNIT	TC	2	------	561940
C49	LAVATORY NIGHT LTS	AMP MNL	2	560900	560898
C50	RH CONSOLE-PAS. TEMP CTRL	BURNDY	6	------	561103
C51	RH CONSOLE SW-A/C & HEAT	SWF	8	------	561107
C52	ENGINE COMPT.-COMPRESSOR 05G	PED WP	2	561566	561690
C53	ENGINE COMPT.-COMPRESSOR 05G	PED WP	2	561566	561690
C54	ENGINE COMPT.-COMPRESSOR 05G	TC	1	560098	560697
C61	ENGINE COMPT.-FUEL FILTER	PED WP	2	561566	561690
C65	UNDER LH HAT RACK	MOLEX	4	561477	561476
C67	LH UNDER DASH-AMPLIF. RH SPK	BLAUPUNKT	2	561988	------
C68	LH UNDER DASH-AMPLIF. RH SPK	BLAUPUNKT	2	561988	------
C73	LH SW PANEL-MULTI FUNC. LEV.	AMP FF	8	561188	------
C74	LH SW PANEL-MULTI FUNC. LEV.	AMP FF	6	------	561108
C78	LUGGAGE COMPT.-DOOR LOCK 4 LH	AMP MNL	4	560851	560852
C79	LUGGAGE COMPT.-DOOR LOCK 4 RH	AMP MNL	4	560851	560852
C80	FR JCT PANEL-LUG. DOOR LOCK	AMP MNL	6	561552	561515
C81	LUGGAGE COMPT.-DOOR LOCK 1 LH	AMP MNL	4	560851	560852
C82	LUGGAGE COMPT.-DOOR LOCK 1 RH	AMP MNL	4	560851	560852
C83	UNDER DASH-FLASHER MODULE	TC	10	561072	561110
C84	UNDER DASH-A/C SYSTEM	TC	3	561091	561071
C85	LUGGAGE COMPT.-DOOR LOCK 3 RH	AMP MNL	4	560851	560852
C86	LUGGAGE COMPT.-DOOR LOCK 3 LH	AMP MNL	4	560851	560852
C88	RR END ROOF-CLEARANCE LTS	AMP MNL	2	560900	560898
C90	RR ROOF AUX. A/C THERMOST.	BURNDY	6	------	561103
C91	RR ROOF AUX. A/C TMP SENSOR	BURNDY	6	------	561104
C92	RR ROOF AUX. A/C FAN RH	TC	2	561030	560997
C93	RR ROOF AUX. A/C FAN LH	TC	2	561030	560997
C94	RR ROOF AUX. A/C FAN RES LH	AMP MNL	2	560900	560898
C95	RR ROOF AUX. A/C FAN RES RH	AMP MNL	2	560900	560898
C96	RR ROOF AUX. A/C LIQ SOL VAL	TC	2	561030	560997
C97	RR ROOF AUX. A/C SHUT SOL VAL	AMPHENOL	2	------	560412
C98	CONDENSER CPT.	ITT SS	4	561998	561999
C101	CONDENSER CPT.-A/C PRESS. SW	PED WP	2	561566	561690
C105	UNDER DASH RH-DRV LIQ SOL VL	TC	2	561030	560997
C106	UNDER DASH RH-DRV WTR VALVE	TC	2	561030	560997
C107	UNDER DASH RH-DRV HTR RH FAN	TC	2	561030	560997
C108	UNDER DASH RH-DRV HTR LH FAN	TC	2	561030	560997

CONNECTORS CODE (C) PAGE G : 1

NO.	LOCATION	TYPE	(NB) CAVITY	*PIN HOUSING	*SOCKET HOUSING
C111	LH CONSOLE SW-DRIVER'LTS	SWF	8	------	561107
C112	LH CONSOLE SW-GENERAL LTS	SWF	8	------	561107
C114	ENGINE DDEC-SPEED SIGNAL	PED WP	2	561566	561590
C115	RR JCT BOX-ENGINE ACCES.	DEUTSCH	40	562281	562284
C116	DRIVE AXLE COMPT.-AIR DRYER	PED MP	2	------	562251
C119	ENGINE COMPT.-LH LOWER LAMP	PED WP	6	561606	561607
C120	ENGINE COMPT.-LH LOWER LAMP	PED WP	6	561606	561607
C123	HAT RACK-BALLAST RH	AMP MNL	6	561552	561515
C124	HAT RACK-FLUORESCENT	AMP MNL	4	561551	561668
C125	HAT RACK-FLUORESCENT	AMP MNL	4	561551	561668
C126	HAT RACK-READING LTS	AMP MNL	2	560900	560898
C130	LH CONSOLE SW-READING LTS	SWF	8	------	561107
C131	LH CONSOLE SW-LUG.DOOR LOCK	SWF	8	------	561107
C132	LH CONSOLE SW-PAS & HOS CHIME	SWF	8	------	561107
C133	LH CONSOLE SW-JACOB OR RET.	SWF	8	------	561107
C134	LH CONSOLE SW-GALLEY	SWF	8	------	561107
C135	LH SW PANEL-ETHER	SWF	8	------	561107
C136	LH CONSOLE SW-MIRROR HTR	SWF	8	------	561107
C137	RH SW PANEL-HEAD LAMP	SWF	8	------	561107
C138	RH SW PANEL-SPARE	SWF	8	------	561107
C139	RH SW PANEL-FOG LAMP	SWF	8	------	561107
C140	FR JCT PANEL-BAT. HI/LO	AMP MNL	2	560900	560898
C141	ENGINE COMPT.-B/UP ALARM	PED WP	2	561566	561590
C142	FR SERVICE CPT-LH MARKER LTS	ITT SS	3	561111	561080
C143	RR LH HAT RACK-FEEDING	AMP MNL	9	561661	561662
C144	RR RH HAT RACK-FEEDING	AMP MNL	9	561661	561662
C145	RH HAT RACK-BALLAST	AMP MNL	4	560851	560852
C146	FR SERVICE CPT-RH MARKER LTS	ITT SS	3	561111	561080
C147	RR ROOF LH-EMERGENCY EXIT LTS	AMP MNL	2	560900	560898
C148	RR ROOF RH-EMERGENCY EXIT LTS	AMP MNL	2	560900	560898
C149	LH HAT RACK-BALLAST	AMP MNL	4	560851	560852
C150	FR RH HAT RACK-110V FLUOR	AMP MNL	2	561248	561247
C151	FR LH HAT RACK-110V FLUOR	AMP MNL	2	561248	561247
C152	LH HAT RACK-GENERAL LTS	AMP MNL	3	561667	561550
C153	RH HAT RACK-GENERAL LTS	AMP MNL	3	561667	561550
C154	RH SW PANEL-HAZARD	SWF	8	------	561107
C155	LH SW PANEL-FAST IDLE	SWF	8	------	561107
C156	LH SW PANEL-STP ENG. OVER.	SWF	8	------	561107
C158	RR ROOF AUX. A/C FEEDING	AMP MNL	3	561667	561550
C160	FR SERVICE CPT-INTERFACE	AMP CPC	37	561644	561646
C161	ENGINE DDEC III-ECM	PED	30	------	561600
C162	ENGINE DDEC III-ACCESSORIES	PED WP	4	561610	561611
C163	ENGINE CPT-COOLANT PROBE	PED MP	2	------	562350
C164	FR SERVICE JCT BOX	AMP CPC	22	561709	561710
C165	FR SERVICE JCT BOX	AMP CPC	16	561693	561695
C166	UNDER INSTRUMENT PANEL	AMP CPC	16	561639	561640
C167	FR SERVICE CPT-EL. FOOT PEDAL	PED WP	3	561781	561782
C168	FR SERVICE CPT-DDR	DEUTSCH	6	562360	------
C169	FR SERVICE CPT-WORLD TR. VIW	AMP CPC	16	561638	561640
C172	ENGINE COMPT-WATER TANK HEAT.	PED WP	2	561566	561690
C173	LAV.PORTABLE-WATER TANK HEAT.	AMP MNL	2	560900	560898
C175	FR SERV CPT-KNEELING FEEDING	PED WP	3	561781	561782
C177	GALLEY-REFRIGERATOR	AMP MNL	2	561248	561247

NO.	LOCATION	TYPE	(NB) CAVITY	*PIN HOUSING	*SOCKET HOUSING	
C179	RH HAT RACK-110V MONITOR	MOLEX	4	561477	561476	PRIOR REV. 010
C180	FR SERV CPT-KNEEL. DIODE	AMP MNL	9	561670	561699	
C181	FR SERV CPT-KNEELING MODULE	AMP MNL	12	561735	561734	
C182	FR SERVICE CPT-SPEED SW	AMP HDP	15	------	562012	
C184	FR SERV CPT-KNEEL. MOD. CTRL	AMP MNL	3	------	561550	
C184	FR AXLE-KNEELING PROXIMITY SW	AMP MNL	3	561667	561550	
C185	FR SERV CPT-KNEEL. MOD. EXH.	AMP MNL	3	------	561550	
C187	FR SERV CPT-KNEEL. MOD. BRK	AMP MNL	3	------	561550	
C187	FR SERVICE JCT BOX-RESISTORS	AMP MNL	6	561552	561515	
C188	LH CONSOLE SW-KNEELING	SWF	8	------	561107	
C190	FR SERVICE CPT.-WORLD TR VIM	PED WP	30	------	561600	
C192	GALLEY-FEEDING	AMP CPC	3	561862	561847	
C194	GALLEY SW-CONTAINER RH	SWF	8	------	561107	
C195	GALLEY SW-CONTAINER LH	SWF	8	------	561107	
C196	FR SERV CPT-KNEEL.	PED	2	561566	561690	
C197	FR SERV CPT-KNEEL.	PED	2	561566	561690	
C199	FR SERV. JCT BOX-SERVICE BRK	AMP MNL	3	561667	561550	
C200	LH CONSOLE SW-24V FLUOR	SWF	8	------	561107	
C201	UNDER INSTRUMENT PANEL	AMP MNL	2	560900	560898	PRIOR REV. 010
C202	UNDER INSTRUMENT PANEL	AMP CPC	9	561636	561637	
C205	LH UNDER DASH-AMPLIF. LH SPK	BLAUPUNKT	2	561988	------	
C206	RH CONSOLE-FR DEFROSTER	TC	2	561030	560997	
C207	RH CONSOLE-DRV RHEOSTAT	AMP MNL	6	561552	561515	
C208	UNDER DASH-DRV HTR MODULE	AMP MNL	9	561670	561669	
C209	UNDER DASH-DRV HTR MODULE	AMP MNL	9	561670	561669	
C210	LH UNDER DASH-AMPLIF. LH SPK	BLAUPUNKT	2	561988	------	
C211	RH CONSOLE-VCR VOLUME	AMP MNL	4	561551	561668	PRIOR REV. 010
C212	LH CONSOLE SW-VCR VIDEO	SWF	8	------	561107	PRIOR REV. 010
C213	FR ROOF-CLEARANCE LT	AMP MNL	2	560900	560898	
C214	UNDER DASH PANEL-TACHOGRAPH	V.D.O.	8	------	562041	
C215	UNDER DASH PANEL-TACHOGRAPH	V.D.O.	8	------	562043	
C216	UNDER DASH PANEL-TACHOGRAPH	AMP MNL	4	560851	560852	
C217	FR LH HAT RACK-SPEAKER	AMP MNL	4	561659	561660	
C218	FR RH HAT RACK-SPEAKER	AMP MNL	4	561659	561660	
C219	DASH RHEOSTAT-P.A. VOLUME	MOLEX	4	561477	561476	PRIOR REV. 010
C220	LH UNDER DASH-P.A. VOLUME	AMP MNL	3	561667	561550	PRIOR REV. 010
C221	LH UNDER DASH-AMPLIFIER FEED	AMP MNL	3	561550	561667	PRIOR REV. 010
C222	LH UNDER DASH-P.A. RADIO	AMP MNL	9	561670	561669	PRIOR REV. 010
C223	LH UNDER DASH-P.A. RADIO	AMP MNL	9	561670	561669	PRIOR REV. 010
C224	LH UNDER DASH-PA & RADIO FEED	AMP MNL	6	561552	561515	PRIOR REV. 010
C225	LH UNDER DASH-PA MICRO OUTLET	AMP MNL	3	561667	561550	PRIOR REV. 010
C226	LH UNDER DASH-PA MICRO OUTLET	AMP MNL	3	561667	561550	PRIOR REV. 010
C227	RH CONSOLE-SPEAKER CONTROL SW	SWF	8	------	561107	PRIOR REV. 010
C229	LH UNDER DASH-PA DRV SPEAKERS	AMP MNL	4	561551	561668	PRIOR REV. 010
C230	ENG.CPT.-FUEL PRIME PUMP SW.	PED WP	2	561566	561690	
C231	ENG.CPT.-FUEL PRIME PUMP	PED WP	2	561566	561690	
C232	UNDER L.H. CONSOLE	MOLEX	4	561477	561476	PRIOR REV. 010
C233	MICRO OUTLET SOCKET	MOLEX	4	561477	561476	PRIOR REV. 010
C234	UNDER INSTRUMENT PANEL-VDO	AMP MNL	4	560851	560852	PRIOR REV. 010
C234	UNDER INSTRUMENT PANEL-VDO	AMP FF	8	------	562363	
C235	UNDER INSTRUMENT PANEL-VDO	AMP MNL	4	560851	560852	PRIOR REV. 010
C235	UNDER INSTRUMENT PANEL-VDO	AMP FF	8	------	562363	
C236	FR SERVICE CPT CENTER-ABS	AMP CPC	14	561585	561583	
C237	FR AXLE CPT-ABS RH SENSOR	WABCO	2	641132	------	
C238	FR AXLE CPT-ABS RH VALVE	WABCO	3	------	641098	
C239	FR AXLE CPT-ABS LH VALVE	WABCO	3	------	641098	
C240	FR AXLE CPT-ABS LH SENSOR	WABCO	2	641132	------	
C241	LAST LUGGAGE CPT-ABS	PED WP	6	561606	561607	
C242	DRIVE AXLE CPT-ABS LH SENSOR	WABCO	2	641132		

CONNECTORS CODE (C) PAGE G : 2

NO.	LOCATION	TYPE	(NB) CAVITY	*PIN HOUSING	*SOCKET HOUSING	
C243	DRIVE AXLE CPT-ABS LH VALVE	WABCO	3	------	641098	
C244	DRIVE AXLE CPT-ABS RH VALVE	WABCO	3	------	641098	
C245	DRIVE AXLE CPT-ABS RH SENSOR	WABCO	2	641132	------	
C246	DRIVE AXLE CPT-ABS SPARE	PED WP	4	561610	561611	
C248	LAST LUGGAGE CPT-ABS	PED WP	6	561606	561607	
C249	FR SERVICE CPT-ABS/DDEC	PED WP	2	561566	561690	
C250	RH SW PANEL-B/UP CANCEL	SWF	8	------	561107	
C251	RH SW PANEL-SEAT HTR	SWF	8	------	561107	
C252	LH SW PANEL-SWITCH LT	SWF	2	------	561837	
C254	FR SERVICE JCT BOX-ABS	AMP CPC	16	561693	561695	
C255	RH CONSOLE-RADIO	AMP MNL	9	561670	561669	PRIOR REV 010
C257	ENGINE COMPT-WATER HEATER	AMP FF	6	------	561186	
C258	DRIVER GUARD WATER HTR TIMER	AMP FF	8	561188	562363	
C259	ENGINE COMPT-WATER HEATER	TC	2	561597	------	
C260	ENGINE COMPT-WATER HEATER	TC	1	561073	------	
C261	ENGINE COMPT-WATER HEATER	TC	2	561597	------	
C266	BATTERY COMPT. LTS	AMP MNL	2	561248	561247	
C267	LUGGAGE COMPT. LTS - 1	AMP MNL	2	561248	561247	
C268	LUGGAGE COMPT. LTS - 2	AMP MNL	2	561248	561247	
C269	LUGGAGE COMPT. LTS - 3 RH	AMP MNL	2	561248	561247	
C270	LUGGAGE COMPT. LTS - 3 LH	AMP MNL	2	561248	561247	
C271	LUGGAGE COMPT. LTS - 4	AMP MNL	2	561248	561247	
C272	FR SERVICE CPT LTS	AMP MNL	2	561248	561247	
C274	FR JCT PANEL-DIODES	AMP MNL	15	561987	561986	
C276	FR JCT PANEL-ALARM BUZZER	BOSCH	5	------	561183	
C281	LH CONSOLE- FR. DEST. SIGN	SWF	2	------	561837	
C282	FR. ROOF- DEST. SIGN	AMP CPC	9	561636	561637	
C290	LUGGAGE CPT-DOOR LOCK	AMP MNL	4	560851	560852	
C291	LUGGAGE CPT-DOOR LOCK	AMP MNL	4	560851	560852	
C292	LUGGAGE CPT-DOOR LOCK	AMP MNL	4	560851	560852	
C293	WIPER MOTOR	AMP FF	6	------	561186	
C294	UNDER DASH-WIPER SYST. FEED	AMP MNL	6	561552	561515	
C295	UNDER DASH-WIPER PULSE GEN.	AMP FF	6	------	561186	PRIOR REV 010
C296	FR SERVICE CPT-HEAD LTS	ITT SS	3	561111	561080	PRIOR REV 010
C298	FR LH HAT RACK-AMPLI	MOLEX	6	------	562464	PRIOR REV 010
C299	FR LH HAT RACK-AMPLI	MOLEX	10	------	562465	PRIOR REV 010
C300	FR LH HAT RACK-AMPLI	MOLEX	6	------	562464	
C301	FR LH HAT RACK-AMPLI	MOLEX	10	------	562465	
C302	UNDER DASH-FLASHER MODULE	AMP MNL	2	560900	560898	
C309	ENGINE DDEC III-ECM POWER	PED WP	5	------	562345	
C312	ENGINE DDEC III-ECM SIGNAL	PED WP	3	561781	561782	
C313	ENGINE DDEC III-OUTPUT	PED WP	4	562398	------	
C314	FR SERVICE CPT-PRESS SW KNEEL	PED WP	2	561566	561690	
C315	FR SERVICE CPT-KNEEL ALARM	PED WP	2	561566	561690	
C316	FR SERVICE CPT-KNEEL ALARM	AMP MNL	2	560900	560898	
C326	ENGINE DDEC III- MANUAL TR.	PED WP	4	561610	561611	
C360	ENGINE CPT.-UNLOAD TAG VALVE	PED WP	2	561566	561690	
C364	FR ROOF-DESTINATION SIGN	AMP MNL	3	561667	561550	
C365	FR ROOF-DESTINATION SIGN	AMP MNL	2	560900	560898	
C368	FR ROOF-DEST. SIGN BALLAST	AMP MNL	3	561667	561550	
C369	FR ROOF-DEST. SIGN OPER. SW.	TORRIX	5	------	562110	
C370	FR ROOF-DEST. SIGN FLUOR.	AMP MNL	2	560900	560898	
C371	FR ROOF-DEST. SIGN FLUOR.	AMP MNL	2	560900	560898	
C372	FR ROOF-DEST. SIGN SPEED SW.	MOLEX	4	561477	561476	

NO.	LOCATION	TYPE	(NB) CAVITY	*PIN HOUSING	*SOCKET HOUSING	
C382	ENGINE GENERATOR 12 VAC RLY	PED WP	1	561605	561577	
C383	LH UNDER DASH-MICRO W/O WIRE	AMP MNL	2	561248	561247	PRIOR REV. 010
C384	LH UNDER DASH-MICRO W/O WIRE	AMP MNL	3	561550	561667	PRIOR REV. 010
C385	BATTERY COMPT. ACC.	AMP MNL	12	561735	561734	
C386	CONDENSER CPT-BYPASS VALVE	PED WP	2	561566	561590	
C387	EVAPORATOR CPT-BYPASS VALVE	PED WP	2	561566	561590	
C388	LH SW PANEL-MASTER SW	SWF	8	------	561107	
C389	EVAPORATOR CPT-WATER PUMP	PED WP	2	561566	561590	
C390	CONDENSER CPT.-A/C JCT BOX	DEUTSCH	24	562280	562283	
C391	CONDENSER CPT.-PRESS.SW	PED WP	2	561566	561590	
C394	LH OVER CONSOLE- B/U MONITOR	AMP MNL	4	560851	560852	
C395	LH OVER CONSOLE- B/U MONITOR	AMP MNL	5	------	------	
C396	HAT RACK SPEAKER	MOLEX	4	562507	562503	
C421	ENGINE CPT. WEBASTO WATER HTR	AMP FF	2	562474	562473	
C422	ENGINE CPT. WEBASTO WATER HTR	PED	2	562644	561597	
C426	ENGINE S60 RAD. FAN CLUTCH	PED WP	3	561781	561782	
C430	DRIVER GUARD WATER HTR TIMER	AMP FF	8	561188	562363	
C450	SOUND SYS. JCT. PANEL	MOLEX	4	562507	562503	
C451	WIRELESS MICRO-FIRST CPT BAG	MOLEX	2	562550	562549	
C452	UNDER DASH INSTR. PANEL	MOLEX	2	562550	562549	
C453	SOUND SYS. JCT.PANEL-VCP	PED WP	2	561566	561590	
C454	SOUND SYS.JCT.PAN.-FILT. VCP	PED WP	2	561566	561590	
C455	WIRELESS MICRO-LH HAT-RACK	CINCH	2	562554	562551	
C456	WORLD TRANSM.-RETARDER ACCUM.	PED MP	2	------	562427	
C457	WORLD TRANSM.-MAIN CONNECTOR	DEUTSCH	31	562572	562536	
C458	WORLD TRANSM.-TURBINE SP.SENS	PED MP	2	------	562426	
C459	WORLD TRANSM.-ENGINE SP.SENS.	PED MP	2	------	562426	
C460	WORLD TRANSM.-SPEED SENSOR	ITT	2	------	562541	
C461	WORLD TRANSM.-RETARDER TEMP.	PED MP	2	561566	561590	
C462	WORLD TRANSM.-RETARD SOL."K"	PED MP	2	------	562426	
C463	WORLD TRANSM.-SENSOR CONN.	DEUTSCH	16	562570	562571	
C464	FR SERVICE CPT.-DDL CONN W.T.	PED MP	12	------	562574	PRIOR REV. 023
C464	FR SERVICE CPT.-DDL CONN W.T.	DEUTSCH	6	562360	------	
C465	LH CONSOLE-SHIFTER SELECTOR	T & BET	10	------	562429	PRIOR REV. 023
C465	LH CONSOLE-SHIFTER SELECTOR	PED	20	------	562825	
C466	FR SERVICE CPT.-RESIS. MOD.	PED WP	3	------	562428	
C467	FR SERVICE CPT.-RESIS. MOD.	PED WP	3	------	562428	
C468	FR SERVICE CPT.-VIM MOD. W.T.	PED MP	18	------	562573	
C470	FR SERVICE CPT.-SILENT 1000	AMP MNL	2	561248	561247	
C471	FR SERVICE CPT.-SILENT 1000	AMP MNL	2	561248	561247	
C472	FR SERVICE CPT.-SILENT 1000	PED WP	2	561566	561690	
C473	FR SERVICE CPT.-SILENT 1000	AMP MNL	3	561667	561550	
C475	FR SERVICE CPT-SPEED SIGN CON	DEUTSCH	6	------	562581	
C475M	FR SERVICE CPT-SPEED SIGN M.T	DEUTSCH	6	562583	------	
C475W	FR SERVICE CPT-SPEED SIGN W.T	DEUTSCH	6	562583	------	
C500	FR JCT PANEL-PRODRIVER	MOLEX	6	562070	562069	
C501	RH CONSOLE-PRODRIVER	PED MP	7	562433	------	
C502	DRIVER GUARD PRE-HTR SW.	SWF	8	------	561107	
C503	DRIVER GUARD PRE-HTR SW.	SWF	2	------	561837	
C504	DRIVER GUARD WEBASTO TIMER	AMP FF	8	561188	562363	PRIOR REV. 025
C504	DRIVER GUARD WEBASTO TIMER	AMP	8	------	562857	
C505	DRIVER GUARD ESPAR TIMER	AMP	12	------	562681	
C506	DRIVER SEAT RH.-HOSTESS CHIME	AMP MNL	3	561667	561550	
C508	RR JCT BOX-FAN CLUTCH MOD	AMP MNL	6	561552	561515	
C510	FR SERVICE CPT-RESIST.RUN LTS	PED MP	2	561566	561690	
C511	LH CONSOLE SW-FAN CLUTCH	SWF	8	------	561107	

CONNECTORS CODE (C) PAGE G : 2

NO.	LOCATION	TYPE	(NB) CAVITY	*PIN HOUSING	*SOCKET HOUSING
C541	SOUND SYS.JCT.PANEL-AUDIO SEAT SYS.	PED WP	2	561566	561690
C542	LH HAT RACK-AUDIO SEAT SYSTEM	AMP MNL	3	561667	561550
C544	SOUND SYS.JCT.PANEL-SEET AUD.	PED WP	3	561781	561782
C545	LH HAT RACK-AUDIO SEAT SYSTEM	AMP MNL	3	561667	561550
C553	UNDER DASH R.H. - CONTROL. HEAD	MOLEX	16	------	562559
C554	UNDER DASH R.H. - CONTROL. HEAD	MOLEX	16	------	562559
C555	UNDER DASH R.H. - CONTROL. HEAD	MOLEX	16	------	562559
C556	UNDER DASH R.H. - RADIO ACC.	MOLEX	2	562550	562549
C557	UNDER DASH R.H. - RADIO ACC.	MOLEX	9	562556	562555
C558	UNDER DASH R.H. - RADIO ACC.	MOLEX	4	562507	562503
C560	SOUND SYS.JCT.PANEL- POW.AMPLI	MOLEX	4	562507	562503
C561	L.H. HAT RACK- WIRELESS MICRO	MOLEX	4	562507	562503
C562	L.H. HAT RACK - VCP	MOLEX	9	562556	562555
C563	L.H MODESTY PANEL- DRIVERS SPK.	MOLEX	4	562507	562503
C564	L.H MODESTY PANEL - MICRO	MOLEX	4	562507	562503
C565	R.H MODESTY PANEL - MICRO	MOLEX	4	562507	562503
C566	L.H. CONSOLE - BOOM MICRO	MOLEX	4	562507	562503
C567	L.H. CONSOLE - DRIVERS MICRO	MOLEX	4	562507	562503
C568	SOUND SYS. JCT. PANEL- PASS. SPK	CINCH	4	562553	562552
C569	SOUND SYS.JCT.PANEL- POWER AMPLI.	MOLEX	9	562556	562555
CS	FR SERVICE CPT-ECU WORLD TR.	PED	32	------	562817
CT	FR SERVICE CPT-ECU WORLD TR.	PED	32	------	562824
CV	FR SERVICE CPT-ECU WORLD TR.	PED	32	------	562823
CX1	FR SERVICE CPT-ECU ABS	AMP	18	------	562792
CX2	FR SERVICE CPT-ECU ABS	AMP	6	------	562793
CX3	FR SERVICE CPT-ECU ABS	AMP	9	------	562794
CX4	FR SERVICE CPT-ECU ABS	AMP	15	------	562795
WEB1	ENGINE CPT. WEBASTO WATER HTR	AMP FF	2	562474	562643
WEB2	ENGINE CPT. WEBASTO WATER HTR	AMP FF	2	562474	562643

NO.	LOCATION	TYPE	(NB) CAVITY	*PIN HOUSING	*SOCKET HOUSING
C3	UNDER DASH-LH	AMP CPC	37	561645	561646
C7	FR SERVICE COMPT.-CLUTCH SW	ITT SS	3	561111	561080
C8	FR JCT PANEL VCR FEED	AMP MNL	2	561248	561247 PRIOR REV 010
C11	LH CONSOLE SW-MIRROR	AMP MNL	3	561667	561550
C12	LH CONSOLE SW-MIRROR HTR	AMP MNL	2	561248	561247
C13	LH CONSOLE SW-MIRROR	AMP MNL	6	561552	561515
C14	UNDER DASH LH-MIRROR	AMP MNL	9	561670	561669
C15	UNDER DASH RH-MIRROR	AMP MNL	9	561670	561669
C18	UNDER DASH-FIRE ALARM	AMP MNL	2	560900	560898
C19	UNDER DASH-A/C & HEAT SYST.	TC	10	561072	561110
C20	RR JCT BOX DIODES	AMP MNL	9	561670	561669
C21	LUGGAGE COMPT.-LOCK DOOR MOT.	PED	2	------	562076
C22	ENGINE COMPT.-CYCLOP LT	PED WP	2	561566	561690
C26	UNDER INSTRUMENT.-PANEL RHEO.	TC	2	561030	560997
C29	FR SERVICE COMPT.-VIM FEED	PED WP	3	561781	561782
C32	RH CONSOLE-DRV TEMP SENSOR	BURNDY	3	------	561104
C33	FRSERVICE COMPT. DDEC VSS	PED WP	2	561566	561690
C34	RH CONSOLE-DRV TEMP CTRL	BURNDY	6	------	561103
C35	RECIRULATED AIR GRIL.-SENSER	BURNDY	3	------	561104
C36	LH CONSOLE SW-CRUISE ON/OFF	SWF	8	------	561107
C37	LH CONSOLE SW-CRUISE SET	SWF	8	------	561107
C38	LH CONSOLE SW-CRUISE RESUME	SWF	8	------	561107
C41	UNDER DASH-FLASHER UNIT	TC	2	------	561940
C49	LAVATORY NIGHT LTS	AMP MNL	2	560900	560898
C50	RH CONSOLE-PAS. TEMP CTRL	BURNDY	6	------	561103
C51	RH CONSOLE SW-A/C & HEAT	SWF	8	------	561107
C52	ENGINE COMPT.-COMPRESSOR 05G	PED WP	2	561566	561690
C53	ENGINE COMPT.-COMPRESSOR 05G	PED WP	2	561566	561690
C54	ENGINE COMPT.-COMPRESSOR 05G	TC	1	560098	560697
C61	ENGINE COMPT.-FUEL FILTER	PED WP	2	561566	561690
C65	UNDER LH HAT RACK	MOLEX	4	561477	561476
C67	LH UNDER DASH-AMPLIF. RH SPK	BLAUPUNKT	2	561988	------
C68	LH UNDER DASH-AMPLIF. RH SPK	BLAUPUNKT	2	561988	------
C73	LH SW PANEL-MULTI FUNC. LEV.	AMP FF	8	561188	------
C74	LH SW PANEL-MULTI FUNC. LEV.	AMP FF	6	------	561108
C78	LUGGAGE COMPT.-DOOR LOCK 4 LH	AMP MNL	4	560851	560852
C79	LUGGAGE COMPT.-DOOR LOCK 4 RH	AMP MNL	4	560851	560852
C80	FR JCT PANEL-LUG. DOOR LOCK	AMP MNL	6	561552	561515
C81	LUGGAGE COMPT.-DOOR LOCK 1 LH	AMP MNL	4	560851	560852
C82	LUGGAGE COMPT.-DOOR LOCK 1 RH	AMP MNL	4	560851	560852
C83	UNDER DASH-FLASHER MODULE	TC	10	561072	561110
C84	UNDER DASH-A/C SYSTEM	TC	3	561091	561071
C85	LUGGAGE COMPT.-DOOR LOCK 3 RH	AMP MNL	4	560851	560852
C86	LUGGAGE COMPT.-DOOR LOCK 3 LH	AMP MNL	4	560851	560852
C88	RR END ROOF-CLEARANCE LTS	AMP MNL	2	560900	560898
C90	RR ROOF AUX. A/C THERMOST.	BURNDY	6	------	561103
C91	RR ROOF AUX. A/C TMP SENSOR	BURNDY	6	------	561104
C92	RR ROOF AUX. A/C FAN RH	TC	2	561030	560997
C93	RR ROOF AUX. A/C FAN LH	TC	2	561030	560997
C94	RR ROOF AUX. A/C FAN RES LH	AMP MNL	2	560900	560898
C95	RR ROOF AUX. A/C FAN RES RH	AMP MNL	2	560900	560898
C96	RR ROOF AUX. A/C LIQ SOL VAL	TC	2	561030	560997
C97	RR ROOF AUX. A/C SHUT SOL VAL	AMPHENOL	2	------	560412
C98	CONDENSER CPT.	ITT SS	4	561998	561999
C101	CONDENSER CPT.-A/C PRESS. SW	PED WP	2	561566	561690
C105	UNDER DASH RH-DRV LIQ SOL VL	TC	2	561030	560997
C106	UNDER DASH RH-DRV WTR VALVE	TC	2	561030	560997
C107	UNDER DASH RH-DRV HTR RH FAN	TC	2	561030	560997
C108	UNDER DASH RH-DRV HTR LH FAN	TC	2	561030	560997

CONNECTORS CODE (C) PAGE G : 1

NO.	LOCATION	TYPE	(NB) CAVITY	*PIN HOUSING	*SOCKET HOUSING
C111	LH CONSOLE SW-DRIVER'LTS	SWF	8	------	561107
C112	LH CONSOLE SW-GENERAL LTS	SWF	8	------	561107
C114	ENGINE DDEC-SPEED SIGNAL	PED WP	2	561566	561590
C115	RR JCT BOX-ENGINE ACCES.	DEUTSCH	40	562281	562284
C116	DRIVE AXLE COMPT.-AIR DRYER	PED MP	2	------	562251
C119	ENGINE COMPT.-LH LOWER LAMP	PED WP	6	561606	561607
C120	ENGINE COMPT.-LH LOWER LAMP	PED WP	6	561606	561607
C123	HAT RACK-BALLAST RH	AMP MNL	6	561552	561515
C124	HAT RACK-FLUORESCENT	AMP MNL	4	561551	561668
C125	HAT RACK-FLUORESCENT	AMP MNL	4	561551	561668
C126	HAT RACK-READING LTS	AMP MNL	2	560900	560898
C130	LH CONSOLE SW-READING LTS	SWF	8	------	561107
C131	LH CONSOLE SW-LUG.DOOR LOCK	SWF	8	------	561107
C132	LH CONSOLE SW-PAS & HOS CHIME	SWF	8	------	561107
C133	LH CONSOLE SW-JACOB OR RET.	SWF	8	------	561107
C134	LH CONSOLE SW-GALLEY	SWF	8	------	561107
C135	LH SW PANEL-ETHER	SWF	8	------	561107
C136	LH CONSOLE SW-MIRROR HTR	SWF	8	------	561107
C137	RH SW PANEL-HEAD LAMP	SWF	8	------	561107
C138	RH SW PANEL-SPARE	SWF	8	------	561107
C139	RH SW PANEL-FOG LAMP	SWF	8	------	561107
C140	FR JCT PANEL-BAT. HI/LO	AMP MNL	2	560900	560898
C141	ENGINE COMPT.-B/UP ALARM	PED WP	2	561566	561590
C142	FR SERVICE CPT-LH MARKER LTS	ITT SS	3	561111	561080
C143	RR LH HAT RACK-FEEDING	AMP MNL	9	561661	561662
C144	RR RH HAT RACK-FEEDING	AMP MNL	9	561661	561662
C145	RH HAT RACK-BALLAST	AMP MNL	4	560851	560852
C146	FR SERVICE CPT-RH MARKER LTS	ITT SS	3	561111	561080
C147	RR ROOF LH-EMERGENCY EXIT LTS	AMP MNL	2	560900	560898
C148	RR ROOF RH-EMERGENCY EXIT LTS	AMP MNL	2	560900	560898
C149	LH HAT RACK-BALLAST	AMP MNL	4	560851	560852
C150	FR RH HAT RACK-110V FLUOR	AMP MNL	2	561248	561247
C151	FR LH HAT RACK-110V FLUOR	AMP MNL	2	561248	561247
C152	LH HAT RACK-GENERAL LTS	AMP MNL	3	561667	561550
C153	RH HAT RACK-GENERAL LTS	AMP MNL	3	561667	561550
C154	RH SW PANEL-HAZARD	SWF	8	------	561107
C155	LH SW PANEL-FAST IDLE	SWF	8	------	561107
C156	LH SW PANEL-STP ENG. OVER.	SWF	8	------	561107
C158	RR ROOF AUX. A/C FEEDING	AMP MNL	3	561667	561550
C160	FR SERVICE CPT-INTERFACE	AMP CPC	37	561644	561646
C161	ENGINE DDEC III-ECM	PED	30	------	561600
C162	ENGINE DDEC III-ACCESSORIES	PED WP	4	561610	561611
C163	ENGINE CPT-COOLANT PROBE	PED MP	2	------	562350
C164	FR SERVICE JCT BOX	AMP CPC	22	561709	561710
C165	FR SERVICE JCT BOX	AMP CPC	16	561693	561695
C166	UNDER INSTRUMENT PANEL	AMP CPC	16	561639	561640
C167	FR SERVICE CPT-EL. FOOT PEDAL	PED WP	3	561781	561782
C168	FR SERVICE CPT-DDR	DEUTSCH	6	562360	------
C169	FR SERVICE CPT-WORLD TR. VIW	AMP CPC	16	561638	561640
C172	ENGINE COMPT-WATER TANK HEAT.	PED WP	2	561566	561690
C173	LAV.PORTABLE-WATER TANK HEAT.	AMP MNL	2	560900	560898
C175	FR SERV CPT-KNEELING FEEDING	PED WP	3	561781	561782
C177	GALLEY-REFRIGERATOR	AMP MNL	2	561248	561247

NO.	LOCATION	TYPE	(NB) CAVITY	*PIN HOUSING	*SOCKET HOUSING	
C179	RH HAT RACK-110V MONITOR	MOLEX	4	561477	561476	PRIOR REV. 010
C180	FR SERV CPT-KNEEL. DIODE	AMP MNL	9	561670	561699	
C181	FR SERV CPT-KNEELING MODULE	AMP MNL	12	561735	561734	
C182	FR SERVICE CPT-SPEED SW	AMP HDP	15	------	562012	
C184	FR SERV CPT-KNEEL. MOD. CTRL	AMP MNL	3	------	561550	
C184	FR AXLE-KNEELING PROXIMITY SW	AMP MNL	3	561667	561550	
C185	FR SERV CPT-KNEEL. MOD. EXH.	AMP MNL	3	------	561550	
C187	FR SERV CPT-KNEEL. MOD. BRK	AMP MNL	3	------	561550	
C187	FR SERVICE JCT BOX-RESISTORS	AMP MNL	6	561552	561515	
C188	LH CONSOLE SW-KNEELING	SWF	8	------	561107	
C190	FR SERVICE CPT.-WORLD TR VIM	PED WP	30	------	561600	
C192	GALLEY-FEEDING	AMP CPC	3	561862	561847	
C194	GALLEY SW-CONTAINER RH	SWF	8	------	561107	
C195	GALLEY SW-CONTAINER LH	SWF	8	------	561107	
C196	FR SERV CPT-KNEEL.	PED	2	561566	561690	
C197	FR SERV CPT-KNEEL.	PED	2	561566	561690	
C199	FR SERV. JCT BOX-SERVICE BRK	AMP MNL	3	561667	561550	
C200	LH CONSOLE SW-24V FLUOR	SWF	8	------	561107	
C201	UNDER INSTRUMENT PANEL	AMP MNL	2	560900	560898	PRIOR REV. 010
C202	UNDER INSTRUMENT PANEL	AMP CPC	9	561636	561637	
C206	RH CONSOLE-FR DEFROSTER	TC	2	561030	560997	
C207	RH CONSOLE-DRV RHEOSTAT	AMP MNL	6	561552	561515	
C208	UNDER DASH-DRV HTR MODULE	AMP MNL	9	561670	561669	
C209	UNDER DASH-DRV HTR MODULE	AMP MNL	9	561670	561669	
C210	LH UNDER DASH-AMPLIF. LH SPK	BLAUPUNKT	2	561988	------	
C211	RH CONSOLE-VCR VOLUME	AMP MNL	4	561551	561668	PRIOR REV. 010
C212	LH CONSOLE SW-VCR VIDEO	SWF	8	------	561107	PRIOR REV. 010
C213	FR ROOF-CLEARANCE LT	AMP MNL	2	560900	560898	
C214	UNDER DASH PANEL-TACHOGRAPH	V.D.O.	8	------	562041	
C215	UNDER DASH PANEL-TACHOGRAPH	V.D.O.	8	------	562043	
C216	UNDER DASH PANEL-TACHOGRAPH	AMP MNL	4	560851	560852	
C217	FR LH HAT RACK-SPEAKER	AMP MNL	9	561661	561662	
C218	FR RH HAT RACK-SPEAKER	AMP MNL	9	561661	561662	
C219	DASH RHEOSTAT-P.A. VOLUME	MOLEX	4	561477	561476	PRIOR REV. 010
C220	LH UNDER DASH-P.A. VOLUME	AMP MNL	3	561667	561550	PRIOR REV. 010
C221	LH UNDER DASH-AMPLIFIER FEED	AMP MNL	3	561550	561667	PRIOR REV. 010
C222	LH UNDER DASH-P.A. RADIO	AMP MNL	9	561670	561669	PRIOR REV. 010
C223	LH UNDER DASH-P.A. RADIO	AMP MNL	9	561670	561669	PRIOR REV. 010
C224	LH UNDER DASH-PA & RADIO FEED	AMP MNL	6	561552	561515	PRIOR REV. 010
C225	LH UNDER DASH-PA MICRO OUTLET	AMP MNL	3	561667	561550	PRIOR REV. 010
C226	LH UNDER DASH-PA MICRO OUTLET	AMP MNL	3	561667	561550	PRIOR REV. 010
C227	RH CONSOLE-SPEAKER CONTROL SW	SWF	8	------	561107	PRIOR REV. 010
C229	LH UNDER DASH-PA DRV SPEAKERS	AMP MNL	4	561551	561668	PRIOR REV. 010
C230	ENG.CPT.-FUEL PRIME PUMP SW.	PED WP	2	561566	561690	
C231	ENG.CPT.-FUEL PRIME PUMP	PED WP	2	561566	561690	
C232	UNDER L.H. CONSOLE	MOLEX	4	561477	561476	PRIOR REV. 010
C233	MICRO OUTLET SOCKET	MOLEX	4	561477	561476	PRIOR REV. 010
C234	UNDER INSTRUMENT PANEL-VDO	AMP MNL	4	560851	560852	PRIOR REV. 010
C234	UNDER INSTRUMENT PANEL-VDO	AMP FF	8	------	562363	
C235	UNDER INSTRUMENT PANEL-VDO	AMP MNL	4	560851	560852	PRIOR REV. 010
C235	UNDER INSTRUMENT PANEL-VDO	AMP FF	8	------	562363	
C236	FR SERVICE CPT CENTER-ABS	AMP CPC	14	561585	561583	
C237	FR AXLE CPT-ABS RH SENSOR	WABCO	2	641132	------	
C238	FR AXLE CPT-ABS RH VALVE	WABCO	3	------	641098	
C239	FR AXLE CPT-ABS LH VALVE	WABCO	3	------	641098	
C240	FR AXLE CPT-ABS LH SENSOR	WABCO	2	641132	------	
C241	LAST LUGGAGE CPT-ABS	PED WP	6	561606	561607	
C242	DRIVE AXLE CPT-ABS LH SENSOR	WABCO	2	641132		

CONNECTORS CODE (C) PAGE G : 2

NO.	LOCATION	TYPE	(NB) CAVITY	*PIN HOUSING	*SOCKET HOUSING	
C243	DRIVE AXLE CPT-ABS LH VALVE	WABCO	3	------	641098	
C244	DRIVE AXLE CPT-ABS RH VALVE	WABCO	3	------	641098	
C245	DRIVE AXLE CPT-ABS RH SENSOR	WABCO	2	641132	------	
C246	DRIVE AXLE CPT-ABS SPARE	PED WP	4	561610	561611	
C248	LAST LUGGAGE CPT-ABS	PED WP	6	561606	561607	
C249	FR SERVICE CPT-ABS/DDEC	PED WP	2	561566	561690	
C250	RH SW PANEL-B/UP CANCEL	SWF	8	------	561107	
C251	RH SW PANEL-SEAT HTR	SWF	8	------	561107	
C252	LH SW PANEL-SWITCH LT	SWF	2	------	561837	
C254	FR SERVICE JCT BOX-ABS	AMP CPC	16	561693	561695	
C255	RH CONSOLE-RADIO	AMP MNL	9	561670	561669	PRIOR REV 010
C257	ENGINE COMPT-WATER HEATER	AMP FF	6	------	561186	
C258	DRIVER GUARD WATER HTR TIMER	AMP FF	8	561188	562363	
C259	ENGINE COMPT-WATER HEATER	TC	2	561597	------	
C260	ENGINE COMPT-WATER HEATER	TC	1	561073	------	
C261	ENGINE COMPT-WATER HEATER	TC	2	561597	------	
C266	BATTERY COMPT. LTS	AMP MNL	2	561248	561247	
C267	LUGGAGE COMPT. LTS - 1	AMP MNL	2	561248	561247	
C268	LUGGAGE COMPT. LTS - 2	AMP MNL	2	561248	561247	
C269	LUGGAGE COMPT. LTS - 3 RH	AMP MNL	2	561248	561247	
C270	LUGGAGE COMPT. LTS - 3 LH	AMP MNL	2	561248	561247	
C271	LUGGAGE COMPT. LTS - 4	AMP MNL	2	561248	561247	
C272	FR SERVICE CPT LTS	AMP MNL	2	561248	561247	
C274	FR JCT PANEL-DIODES	AMP MNL	15	561987	561986	
C276	FR JCT PANEL-ALARM BUZZER	BOSCH	5	------	561183	
C281	LH CONSOLE- FR. DEST. SIGN	SWF	2	------	561837	
C282	FR. ROOF- DEST. SIGN	AMP CPC	9	561636	561637	
C290	LUGGAGE CPT-DOOR LOCK	AMP MNL	4	560851	560852	
C291	LUGGAGE CPT-DOOR LOCK	AMP MNL	4	560851	560852	
C292	LUGGAGE CPT-DOOR LOCK	AMP MNL	4	560851	560852	
C293	WIPER MOTOR	AMP FF	6	------	561186	
C294	UNDER DASH-WIPER SYST. FEED	AMP MNL	6	561552	561515	
C295	UNDER DASH-WIPER PULSE GEN.	AMP FF	6	------	561186	PRIOR REV 010
C296	FR SERVICE CPT-HEAD LTS	ITT SS	3	561111	561080	PRIOR REV 010
C298	FR LH HAT RACK-AMPLI	MOLEX	6	------	562464	PRIOR REV 010
C299	FR LH HAT RACK-AMPLI	MOLEX	10	------	562465	PRIOR REV 010
C300	FR LH HAT RACK-AMPLI	MOLEX	6	------	562464	
C301	FR LH HAT RACK-AMPLI	MOLEX	10	------	562465	
C302	UNDER DASH-FLASHER MODULE	AMP MNL	2	560900	560898	
C309	ENGINE DDEC III-ECM POWER	PED WP	5	------	562345	
C312	ENGINE DDEC III-ECM SIGNAL	PED WP	3	561781	561782	
C313	ENGINE DDEC III-OUTPUT	PED WP	4	562398	------	
C314	FR SERVICE CPT-PRESS SW KNEEL	PED WP	2	561566	561690	
C315	FR SERVICE CPT-KNEEL ALARM	PED WP	2	561566	561690	
C316	FR SERVICE CPT-KNEEL ALARM	AMP MNL	2	560900	560898	
C326	ENGINE DDEC III- MANUAL TR.	PED WP	4	561610	561611	
C360	ENGINE CPT.-UNLOAD TAG VALVE	PED WP	2	561566	561690	
C364	FR ROOF-DESTINATION SIGN	AMP MNL	3	561667	561550	
C365	FR ROOF-DESTINATION SIGN	AMP MNL	2	560900	560898	
C368	FR ROOF-DEST. SIGN BALLAST	AMP MNL	3	561667	561550	
C369	FR ROOF-DEST. SIGN OPER. SW.	TORRIX	5	------	562110	
C370	FR ROOF-DEST. SIGN FLUOR.	AMP MNL	2	560900	560898	
C371	FR ROOF-DEST. SIGN FLUOR.	AMP MNL	2	560900	560898	
C372	FR ROOF-DEST. SIGN SPEED SW.	MOLEX	4	561477	561476	

NO.	LOCATION	TYPE	(NB) CAVITY	•PIN HOUSING	•SOCKET HOUSING	
C382	ENGINE GENERATOR 12 VAC RLY	PED WP	1	561605	561577	
C383	LH UNDER DASH-MICRO W/O WIRE	AMP MNL	2	561248	561247	PRIOR REV. 010
C384	LH UNDER DASH-MICRO W/O WIRE	AMP MNL	3	561550	561667	PRIOR REV. 010
C385	BATTERY COMPT. ACC.	AMP MNL	12	561735	561734	
C386	CONDENSER CPT-BYPASS VALVE	PED WP	2	561566	561590	
C387	EVAPORATOR CPT-BYPASS VALVE	PED WP	2	561566	561590	
C388	LH SW PANEL-MASTER SW	SWF	8	------	561107	
C389	EVAPORATOR CPT-WATER PUMP	PED WP	2	561566	561590	
C390	CONDENSER CPT.-A/C JCT BOX	DEUTSCH	24	562280	562283	
C391	CONDENSER CPT.-PRESS.SW	PED WP	2	561566	561590	
C394	LH OVER CONSOLE- B/U MONITOR	AMP MNL	4	560851	560852	
C395	LH OVER CONSOLE- B/U MONITOR	AMP MNL	5	------	------	
C396	HAT RACK SPEAKER	MOLEX	4	562507	562503	
C399	ENGINE CPT.- ALTENATOR	PED WP	2	561566	561690	
C421	ENGINE CPT. WEBASTO WATER HTR	AMP FF	2	562474	562473	
C422	ENGINE CPT. WEBASTO WATER HTR	PED	2	562644	561597	
C426	ENGINE S60 RAD. FAN CLUTCH	PED WP	3	561781	561782	
C430	DRIVER GUARD WATER HTR TIMER	AMP FF	8	561188	562363	
C450	SOUND SYS. JCT. PANEL	MOLEX	4	562507	562503	
C451	WIRELESS MICRO-FIRST CPT BAG	MOLEX	2	562550	562549	
C452	UNDER DASH INSTR. PANEL	MOLEX	2	562550	562549	
C453	SOUND SYS. JCT.PANEL-VCP	PED WP	2	561566	561590	
C454	SOUND SYS.JCT.PAN.-FILT. VCP	PED WP	2	561566	561590	
C455	WIRELESS MICRO-LH HAT-RACK	CINCH	2	562554	562551	
C456	WORLD TRANSM.-RETARDER ACCUM.	PED MP	2	------	562427	
C457	WORLD TRANSM.-MAIN CONNECTOR	DEUTSCH	31	562572	562536	
C458	WORLD TRANSM.-TURBINE SP.SENS	PED MP	2	------	562426	
C459	WORLD TRANSM.-ENGINE SP.SENS.	PED MP	2	------	562426	
C460	WORLD TRANSM.-SPEED SENSOR	ITT	2	------	562541	
C461	WORLD TRANSM.-RETARDER TEMP.	PED MP	2	561566	561590	
C462	WORLD TRANSM.-RETARD SOL."K"	PED MP	2	------	562426	
C463	WORLD TRANSM.-SENSOR CONN.	DEUTSCH	16	562570	562571	
C464	FR SERVICE CPT.-DDL CONN W.T.	PED MP	12	------	562574	PRIOR REV. 023
C464	FR SERVICE CPT.-DDL CONN W.T.	DEUTSCH	6	562360	------	
C465	LH CONSOLE-SHIFTER SELECTOR	T & BET	10	------	562429	PRIOR REV. 023
C465	LH CONSOLE-SHIFTER SELECTOR	PED	20	------	562825	
C466	FR SERVICE CPT.-RESIS. MOD.	PED WP	3	------	562428	
C467	FR SERVICE CPT.-RESIS. MOD.	PED WP	3	------	562428	
C468	FR SERVICE CPT.-VIM MOD. W.T.	PED MP	18	------	562573	
C470	FR SERVICE CPT.-SILENT 1000	AMP MNL	2	561248	561247	
C471	FR SERVICE CPT.-SILENT 1000	AMP MNL	2	561248	561247	
C472	FR SERVICE CPT.-SILENT 1000	PED WP	2	561566	561690	
C473	FR SERVICE CPT.-SILENT 1000	AMP MNL	3	561667	561550	
C475	FR SERVICE CPT-SPEED SIGN CON	DEUTSCH	6	------	562581	
C475M	FR SERVICE CPT-SPEED SIGN M.T	DEUTSCH	6	562583	------	
C475W	FR SERVICE CPT-SPEED SIGN W.T	DEUTSCH	6	562583	------	
C500	FR JCT PANEL-PRODRIVER	MOLEX	6	562070	562069	
C501	RH CONSOLE-PRODRIVER	PED MP	7	562433	------	
C502	DRIVER GUARD PRE-HTR SW.	SWF	8	------	561107	
C503	DRIVER GUARD PRE-HTR SW.	SWF	2	------	561837	
C504	DRIVER GUARD WEBASTO TIMER	AMP FF	8	561188	562363	PRIOR REV. 025
C504	DRIVER GUARD WEBASTO TIMER	AMP	8	------	562857	
C505	DRIVER GUARD ESPAR TIMER	AMP	12	------	562681	
C506	DRIVER SEAT RH.-HOSTESS CHIME	AMP MNL	3	561667	561550	
C508	RR JCT BOX-FAN CLUTCH MOD	AMP MNL	6	561552	561515	
C510	FR SERVICE CPT-RESIST.RUN LTS	PED MP	2	561566	561690	
C511	LH CONSOLE SW-FAN CLUTCH	SWF	8	------	561107	

CONNECTORS CODE (C) PAGE G : 2

NO.	LOCATION	TYPE	(NB) CAVITY	•PIN HOUSING	•SOCKET HOUSING
C541	SOUND SYS.JCT.PANEL-AUDIO SEAT SYS.	PED WP	2	561566	561690
C542	LH HAT RACK-AUDIO SEAT SYSTEM	AMP MNL	3	561667	561550
C544	SOUND SYS.JCT.PANEL-SEET AUD.	PED WP	3	561781	561782
C545	LH HAT RACK-AUDIO SEAT SYSTEM	AMP MNL	3	561667	561550
C553	UNDER DASH R.H. - CONTROL. HEAD	MOLEX	16	------	562559
C554	UNDER DASH R.H. - CONTROL. HEAD	MOLEX	16	------	562559
C555	UNDER DASH R.H. - CONTROL. HEAD	MOLEX	16	------	562559
C556	UNDER DASH R.H. - RADIO ACC.	MOLEX	2	562550	562549
C557	UNDER DASH R.H. - RADIO ACC.	MOLEX	9	562556	562555
C558	UNDER DASH R.H. - RADIO ACC.	MOLEX	4	562507	562503
C560	SOUND SYS.JCT.PANEL- POW.AMPLI	MOLEX	4	562507	562503
C561	L.H. HAT RACK- WIRELESS MICRO	MOLEX	4	562507	562503
C562	L.H. HAT RACK - VCP	MOLEX	9	562556	562555
C563	L.H MODESTY PANEL- DRIVERS SPK.	MOLEX	4	562507	562503
C564	L.H MODESTY PANEL - MICRO	MOLEX	4	562507	562503
C565	R.H MODESTY PANEL - MICRO	MOLEX	4	562507	562503
C566	L.H. CONSOLE - BOOM MICRO	MOLEX	4	562507	562503
C567	L.H. CONSOLE - DRIVERS MICRO	MOLEX	4	562507	562503
C568	SOUND SYS. JCT. PANEL- PASS. SPK	CINCH	4	562553	562552
C569	SOUND SYS.JCT.PANEL- POWER AMPLI.	MOLEX	9	562556	562555
CS	FR SERVICE CPT-ECU WORLD TR.	PED	32	------	562817
CT	FR SERVICE CPT-ECU WORLD TR.	PED	32	------	562824
CV	FR SERVICE CPT-ECU WORLD TR.	PED	32	------	562823
CX1	FR SERVICE CPT-ECU ABS	AMP	18	------	562792
CX2	FR SERVICE CPT-ECU ABS	AMP	6	------	562793
CX3	FR SERVICE CPT-ECU ABS	AMP	9	------	562794
CX4	FR SERVICE CPT-ECU ABS	AMP	15	------	562795
WEB1	ENGINE CPT. WEBASTO WATER HTR	AMP FF	2	562474	562643
WEB2	ENGINE CPT. WEBASTO WATER HTR	AMP FF	2	562474	562643

NO.	PAGE	AMP	#PREVOST	LOCATION	FUNCTION
D1	5	3A	561740	FR JCT PANEL	PRIMARY LO-AIR SONALERT
D2	5	3A	561740	FR JCT PANEL	SECONDARY LO-AIR SONALERT
D3	15	3A	063849	FR JCT PANEL	A/C & HEAT CONTROL SW
D4	15	3A	063849	FR JCT PANEL	WATER HEATER ON SIGNAL
D5	1	3A	062120	FR JCT PANEL	DASH MASTER CUT OUT SW
D6	1	3A	060798	BATTERY CPT.	STARTER- SUPPRESSOR COIL RLY
D7	15	3A	060798	A/C JCT. BOX	EVAP. MOT.- SUPPRESSOR COIL RLY
D9	14	3A	561740	CHIME	CHIME SUPPRESSOR
D10	21	3A	062120	FR JCT PANEL	KNEELING SYSTEM FEED BACK
D11	7	3A	062120	FR JCT PANEL	FR RH. SIDE DIRECTIONNAL LTS
D12	21	3A	062588	FR SERVICE CPT.	KNEELING SYSTEM
D13	21	3A	062588	FR SERVICE CPT.	KNEELING SYSTEM
D14	21	3A	062588	FR SERVICE CPT.	KNEELING SYSTEM
D15	31	3A	561740	FR DEST. SIGN	FR. DESTINATION SIGN
D16	31	3A	561740	FR DEST. SIGN	FR. DESTINATION SIGN
D17	7	3A	561740	FR JCT PANEL	HAZARD LH
D18	7	3A	561740	FR JCT PANEL	HAZARD RH
D19	6	3A	561740	FR JCT PANEL	DAYTIME RUNNING LTS
D20	6	3A	561740	FR JCT PANEL	DAYTIME RUNNING LTS
D21	7	3A	561740	UNDER DASH	AUDIBLE FLASHER RLY LH
D22	7	3A	561740	UNDER DASH	AUDIBLE FLASHER RLY RH
D23	15	3A	060798	FR JCT PANEL	WATER VALVE SUPPRESSOR
D24	15	3A	561740	FR JCT PANEL	BYPASS VALVE SUPPRESSOR
D60	16	3A	561740	RR JCT BOX	AUX. A/C COMPRESSOR CLUTCH
D61	15&16	3A	561740	RR JCT BOX	A/C COMPRESSOR CLUTCH
D78	17	3A	561740	LH CONSOLE	WATER HEATER TIMER & SW
D79	17	3A	561740	LH CONSOLE	WATER HEATER TIMER & SW

DIODE CODE (D) Page H : 1

NO.	PAGE	AMP	#PREVOST	LOCATION	FUNCTION

DIODE CODE (D) Page H:1

NO.	PAGE	AMP	#PREVOST	LOCATION	FUNCTION
D1	5	3A	561740	FR JCT PANEL	PRIMARY LO-AIR SONALERT
D2	5	3A	561740	FR JCT PANEL	SECONDARY LO-AIR SONALERT
D3	15	3A	063849	FR JCT PANEL	A/C & HEAT CONTROL SW
D4	15	3A	063849	FR JCT PANEL	WATER HEATER ON SIGNAL
D5	1	3A	062120	FR JCT PANEL	DASH MASTER CUT OUT SW
D6	1	3A	060798	BATTERY CPT.	STARTER- SUPPRESSOR COIL RLY
D7	15	3A	060798	A/C JCT. BOX	EVAP. MOT.- SUPPRESSOR COIL RLY
D9	14	3A	561740	CHIME	CHIME SUPPRESSOR
D10	21	3A	062120	FR JCT PANEL	KNEELING SYSTEM FEED BACK
D11	7	3A	062120	FR JCT PANEL	FR RH. SIDE DIRECTIONNAL LTS
D12	21	3A	062588	FR SERVICE CPT.	KNEELING SYSTEM
D13	21	3A	062588	FR SERVICE CPT.	KNEELING SYSTEM
D14	21	3A	062588	FR SERVICE CPT.	KNEELING SYSTEM
D15	31	3A	561740	FR DEST. SIGN	FR. DESTINATION SIGN
D16	31	3A	561740	FR DEST. SIGN	FR. DESTINATION SIGN
D17	7	3A	561740	FR JCT PANEL	HAZARD LH
D18	7	3A	561740	FR JCT PANEL	HAZARD RH
D19	6	3A	561740	FR JCT PANEL	DAYTIME RUNNING LTS
D20	6	3A	561740	FR JCT PANEL	DAYTIME RUNNING LTS
D21	7	3A	561740	UNDER DASH	AUDIBLE FLASHER RLY LH
D22	7	3A	561740	UNDER DASH	AUDIBLE FLASHER RLY RH
D23	15	3A	060798	FR JCT PANEL	WATER VALVE SUPPRESSOR
D24	15	3A	561740	FR JCT PANEL	BYPASS VALVE SUPPRESSOR
D60	16	3A	561740	RR JCT BOX	AUX. A/C COMPRESSOR CLUTCH
D61	15&16	3A	561740	RR JCT BOX	A/C COMPRESSOR CLUTCH
D78	17	3A	561740	LH CONSOLE	WATER HEATER TIMER & SW
D79	17	3A	561740	LH CONSOLE	WATER HEATER TIMER & SW
D81	21	3A	062588	FR SERVICE CPT.	KNEELING ALARM
D82	21	3A	062588	FR SERVICE CPT.	KNEELING ALARM
D83	9	3A	561740	RR JCT BOX	FAN CLUTCH W/RETARDER

DIODE CODE (D) Page H:1

NO.	PAGE	AMP	#PREVOST	LOCATION	FUNCTION

NO.	PAGE	AMP	•PREVOST	LOCATION	FUNCTION
D1	5	3A	561740	FR JCT PANEL	PRIMARY LO-AIR SONALERT
D2	5	3A	561740	FR JCT PANEL	SECONDARY LO-AIR SONALERT
D3	15	3A	063849	FR JCT PANEL	A/C & HEAT CONTROL SW
D4	15	3A	063849	FR JCT PANEL	WATER HEATER ON SIGNAL
D5	1	3A	062120	FR JCT PANEL	DASH MASTER CUT OUT SW
D6	1	3A	060798	BATTERY CPT.	STARTER- SUPPRESSOR COIL RLY
D7	15	3A	060798	A/C JCT. BOX	EVAP. MOT.- SUPPRESSOR COIL RLY
D9	14	3A	561740	CHIME	CHIME SUPPRESSOR
D10	21	3A	062120	FR JCT PANEL	KNEELING SYSTEM FEED BACK
D11	7	3A	062120	FR JCT PANEL	FR RH. SIDE DIRECTIONNAL LTS
D12	21	3A	062588	FR SERVICE CPT.	KNEELING SYSTEM
D13	21	3A	062588	FR SERVICE CPT.	KNEELING SYSTEM
D14	21	3A	062588	FR SERVICE CPT.	KNEELING SYSTEM
D15	31	3A	561740	FR DEST. SIGN	FR. DESTINATION SIGN
D16	31	3A	561740	FR DEST. SIGN	FR. DESTINATION SIGN
D17	7	3A	561740	FR JCT PANEL	HAZARD LH
D18	7	3A	561740	FR JCT PANEL	HAZARD RH
D19	6	3A	561740	FR JCT PANEL	DAYTIME RUNNING LTS
D20	6	3A	561740	FR JCT PANEL	DAYTIME RUNNING LTS
D21	7	3A	561740	UNDER DASH	AUDIBLE FLASHER RLY LH
D22	7	3A	561740	UNDER DASH	AUDIBLE FLASHER RLY RH
D23	15	3A	060798	FR JCT PANEL	WATER VALVE SUPPRESSOR
D24	15	3A	561740	FR JCT PANEL	BYPASS VALVE SUPPRESSOR
D25	1	3A	561740	RR JCT BOX	ALTERNATOR SYSTEM
D26	1	3A	561740	RR JCT BOX	ALTERNATOR SYSTEM
D27	1	3A	561740	UNDER DASH	ALTERNATOR SYSTEM
D60	16	3A	561740	RR JCT BOX	AUX. A/C COMPRESSOR CLUTCH
D61	15&16	3A	561740	RR JCT BOX	A/C COMPRESSOR CLUTCH
D78	17	3A	561740	LH CONSOLE	WATER HEATER TIMER & SW
D79	17	3A	561740	LH CONSOLE	WATER HEATER TIMER & SW
D81	21	3A	062588	FR SERVICE CPT.	KNEELING ALARM
D82	21	3A	062588	FR SERVICE CPT.	KNEELING ALARM
D83	9	3A	561740	RR JCT BOX	FAN CLUTCH W/RETARDER

DIODE CODE (D) PAGE H : 1

NO.	PAGE	AMP	•PREVOST	LOCATION	FUNCTION

NO.	PAGE	COIL V	#PREVOST	LOCATION	FUNCTION
R1	2	24V	561991	FR JCT PANEL	ENGINE RUN (24) FR
R2	2	24V	561991	FR JCT PANEL	ENGINE RUN (12) FR
R3	1	24V	561707	BATTERY CPT.	FIELD RELAY
R4	1	24V	561005	BATTERY CPT.	STARTING MOTOR
R9	8	24V	561707	RR JCT BOX	BACK-UP LTS
R12	5	12V	562092	FR JCT PANEL	ELECTRICAL HORNS
R13	6	24V	561707	FR JCT PANEL	FOG LTS
R14	6	24V	561707	FR JCT PANEL	NIGHT'S BLINKER
R15	6	24V	561707	FR JCT PANEL	FR MARKER LTS
R16	6	24V	561707	FR JCT PANEL	IDENT. & CLEARANCE LTS
R17	6	24V	561707	RR JCT BOX	TAIL,LICENCE,MARKER-RR LTS
R18	6	24V	561707	FR JCT PANEL	DAYTIME RUN LTS-CANCEL
R19	6	24V	561707	FR JCT PANEL	HI-BEAM
R20	6	24V	561707	FR JCT PANEL	LO-BEAM
R22	3	24V	561707	FR SERV JCT BOX	DDEC III FAST IDLE SIGNAL
R23	3	24V	561707	RR JCT BOX	DDEC III 12V IGNITION
R24	4	24V	561707	BATTERY CPT.	WORLD TRANSMISSION 12V IGN.
R25	3	24V	561707	FR SERV JCT BOX	BRAKE SW-DDEC CRUISE CTR
R26	8	24V	561707	RR JCT BOX	STOP LTS
R27	27	24V	560407	GALLEY	GALLEY CHARGER
R28	27	24V	561014	GALLEY	GALLEY CHARGER
R31	15	24V	561707	FR JCT PANEL	WATER HEATER-BYPASS VALVE
R32	1	24V	561991	BAT JCT PANEL	12V RR CUT-IN RLY
R33	15	12V	561538	FR JCT PANEL	A/C BLOWER CUT-IN
R34	15	24V	561707	RR JCT BOX	A/C WARNING LT
R35	15	24V	561707	FR JCT PANEL	A/C WATER PUMP
R36	16	24V	561707	RR JCT BOX	AUX. A/C COMPRESSOR CLUTCH
R37	1	24V	561707	RR JCT BOX	GENERATOR-12VAC RLY SIGN
R38	15	24V	561005	A/C JCT BOX	A/C EVAPORATOR FAN
R38	16	24V	561707	RR JCT BOX	AUX. A/C FAN MOTOR
R39	13	24V	561707	RR JCT BOX	24V FLUORESCENT
R40	15	24V	561707	FR JCT BOX	A/C WATER VALVE
R42	1	24V	561991	BATTERY CPT.	12V FRONT CUT-IN RLY
R43	15	24V	561707	FR JCT BOX	WATER HEATER-BYPASS VALVE
R44	1	24V	561991	BATTERY CPT	12V FRONT CUT-IN RLY
R45	12	24V	561707	RR JCT BOX	READING LTS
R46	7	24V	561707	UNDER INST PANEL	LH DIRECTIONNAL LTS
R47	7	24V	561707	UNDER INST PANEL	RH DIRECTIONNAL LTS
R49	24	24V	561707	FR SERV JCT BOX	ABS - SERVICE BRAKE RLY
R50	24	24V	561707	FR SERV JCT BOX	ABS - VR2 RLY
R51	24	24V	561707	FR SERV JCT BOX	ABS - WARNING RLY
R52	24	24V	561707	FR SERV JCT BOX	ABS - VR1 RLY
R53	2	24V	561991	RR JCT BOX	ENGINE RUN 24V RR
R54	2	24V	561991	RR JCT BOX	ENGINE RUN 12V RR
R57	6	24V	561707	FR JCT PANEL	DAY'S BLINKER
R60	6	12V	561538	FR JCT PANEL	DAYTIME RUN LTS
R62	7	24V	561707	BEHIND RH CONS	RH CORNERING
R63	7	24V	561707	BEHIND RH CONS	LH CORNERING
R66	19	24V	562341	RR JCT BOX	UNLOAD TAG-TIME DELAY OFF
R67	19	24V	561707	RR JCT BOX	UNLOAD TAG SYSTEM
R69	22	12V	562092	FR JCT PANEL	LUGG DOOR LOCK
R70	22	12V	562092	FR JCT PANEL	LUGG DOOR UNLOCK
R71	22	12V	562092	FR JCT PANEL	LUGG DOOR LOCK TT LT
R72	11	24V	561707	FR JCT PANEL	DASH EMERGENCY AISLE-LTS
R73	28-29	24V	561557	FR JCT PANEL	SOUND SYSTEM
R74	22	12V	562092	RR JCT BOX	LUGG DOOR LOCK
R75	22	12V	562092	RR JCT BOX	LUGG DOOR UNLOCK
R76	8	24V	561707	RR JCT BOX	STOP LTS-ENG. BRK & RET. SYST.

RELAYS CODE (R) Page I : 1

NO.	PAGE	COIL V	#PREVOST	LOCATION	FUNCTION
R77	7	12V	562092	UNDER DASH	AUDIBLE FLASHER RLY
R78	5	24V	561707	RR JCT BOX	DDEC3 FAN CONTROL SPEED#1
R78	30	24V	561707	LUGG.CPT.#4	INVERTER CUT OUT RLY
R79	5	24V	561707	RR JCT BOX	DDEC3 FAN CONTROL SPEED#2
R80	23	24V	561707	FR SERV JCT BOX	ENGINE BRAKE SYSTEM-WT CONTROL
R81	23	24V	561707	FR SERV JCT BOX	ENGINE BRAKE SYSTEM-WT CONTROL
R82	23	24V	561707	FR SERV JCT BOX	RETARDER SYSTEM
R83	17	24V	561707	RR JCT BOX	WATER HEATER WEBASTO-PUMP
R84	16	24V	561707	RR JCT BOX	AUX. A/C RAD. FAN CLUTCH CTRL
R85	1	12V	561538	BATTERY CPT.	MASTER SWITCH
R86	21	24V	561707	FR SERVICE CPT	KNEELING SYSTEM
R87	21	24V	561707	FR SERVICE CPT	KNEELING SYSTEM
R88	21	24V	561707	FR SERVICE CPT	KNEELING SYSTEM
R91	30	24V	561707	FR JCT PANEL	VIDEO SYSTEM & TV RECEIVER
R92	16	24V	561707	A/C JCT BOX	A/C CONDENSER FAN
R93	16	24V	561707	A/C JCT BOX	A/C CONDENSER FAN
R94	16	24V	561707	A/C JCT BOX	A/C CONDENSER FAN
R95	16	24V	561707	A/C JCT BOX	A/C CONDENSER FAN

RELAYS CODE (R)

NO.	PAGE	COIL	V	*PREVOST	LOCATION	FUNCTION
R1	2		24V	561991	FR JCT PANEL	ENGINE RUN (24) FR
R2	2		24V	561991	FR JCT PANEL	ENGINE RUN (12) FR
R3	1		24V	561707	BATTERY CPT.	FIELD RELAY
R4	1		24V	561005	BATTERY CPT.	STARTING MOTOR
R9	8		24V	561707	RR JCT BOX	BACK-UP LTS
R12	5		12V	562092	FR JCT PANEL	ELECTRICAL HORNS
R13	6		24V	561707	FR JCT PANEL	FOG LTS
R14	6		24V	561707	FR JCT PANEL	NIGHT'S BLINKER
R15	6		24V	561707	FR JCT PANEL	FR MARKER LTS
R16	6		24V	561707	FR JCT PANEL	IDENT. & CLEARANCE LTS
R17	6		24V	561707	RR JCT BOX	TAIL,LICENCE,MARKER-RR LTS
R18	6		24V	561707	FR JCT PANEL	DAYTIME RUN LTS-CANCEL
R19	6		24V	561707	FR JCT PANEL	HI-BEAM
R20	6		24V	561707	FR JCT PANEL	LO-BEAM
R22	3		24V	561707	FR SERV JCT BOX	DDEC III FAST IDLE SIGNAL
R23	3		24V	561707	RR JCT BOX	DDEC III 12V IGNITION
R24	4		24V	561707	BATTERY CPT.	WORLD TRANSMISSION 12V IGN.
R25	3		24V	561707	FR SERV JCT BOX	BRAKE SW-DDEC CRUISE CTR
R26	8		24V	561707	RR JCT BOX	STOP LTS
R27	27		24V	560407	GALLEY	GALLEY CHARGER
R28	27		24V	561014	GALLEY	GALLEY CHARGER
R31	15		24V	561707	FR JCT PANEL	WATER HEATER-BYPASS VALVE
R32	1		24V	561991	BAT JCT PANEL	12V RR CUT-IN RLY
R33	15		12V	561538	FR JCT PANEL	A/C BLOWER CUT-IN
R34	15		24V	561707	RR JCT BOX	A/C WARNING LT
R35	15		24V	561707	FR JCT PANEL	A/C WATER PUMP
R36	16		24V	561707	RR JCT BOX	AUX. A/C COMPRESSOR CLUTCH
R37	1		24V	561707	RR JCT BOX	GENERATOR-12VAC RLY SIGN
R38	15		24V	561005	A/C JCT BOX	A/C EVAPORATOR FAN
R38	16		24V	561707	RR JCT BOX	AUX. A/C FAN MOTOR
R39	13		24V	561707	RR JCT BOX	24V FLUORESCENT
R40	15		24V	561707	FR JCT BOX	A/C WATER VALVE
R42	1		24V	561991	BATTERY CPT.	12V FRONT CUT-IN RLY
R43	15		24V	561707	FR JCT BOX	WATER HEATER-BYPASS VALVE
R44	1		24V	561991	BATTERY CPT	12V FRONT CUT-IN RLY
R45	12		24V	561707	RR JCT BOX	READING LTS
R46	7		24V	561707	UNDER INST PANEL LH	DIRECTIONNAL LTS
R47	7		24V	561707	UNDER INST PANEL RH	DIRECTIONNAL LTS
R49	24		24V	561707	FR SERV JCT BOX	ABS - SERVICE BRAKE RLY
R50	24		24V	561707	FR SERV JCT BOX	ABS - VR2 RLY
R51	24		24V	561707	FR SERV JCT BOX	ABS - WARNING RLY
R52	24		24V	561707	FR SERV JCT BOX	ABS - VR1 RLY
R53	2		24V	561991	RR JCT BOX	ENGINE RUN 24V RR
R54	2		24V	561991	RR JCT BOX	ENGINE RUN 12V RR
R57	6		24V	561707	FR JCT PANEL	DAY'S BLINKER
R60	6		12V	561538	FR JCT PANEL	DAYTIME RUN LTS
R62	7		24V	561707	BEHIND RH CONS	RH CORNERING
R63	7		24V	561707	BEHIND RH CONS	LH CORNERING
R66	19		24V	562341	RR JCT BOX	UNLOAD TAG-TIME DELAY OFF
R67	19		24V	561707	RR JCT BOX	UNLOAD TAG SYSTEM
R69	22		12V	562092	FR JCT PANEL	LUGG DOOR LOCK
R70	22		12V	562092	FR JCT PANEL	LUGG DOOR UNLOCK
R71	22		12V	562092	FR JCT PANEL	LUGG DOOR LOCK TT LT
R72	11		24V	561707	FR JCT PANEL	DASH EMERGENCY AISLE-LTS
R73	28-29		24V	561557	FR JCT PANEL	SOUND SYSTEM
R74	22		12V	562092	RR JCT BOX	LUGG DOOR LOCK
R75	22		12V	562092	RR JCT BOX	LUGG DOOR UNLOCK
R76	8		24V	561707	RR JCT BOX	STOP LTS-ENG. BRK & RET. SYST.

RELAYS CODE (R)

Page 1:1

NO.	PAGE	COIL	V	*PREVOST	LOCATION	FUNCTION
R77	7		12V	562092	UNDER DASH	AUDIBLE FLASHER RLY
R78	5		24V	561707	RR JCT BOX	DDEC3 FAN CONTROL SPEED#1
R78	30		24V	561707	LUGG.CPT.#4	INVERTER CUT OUT RLY
R79	5		24V	561707	RR JCT BOX	DDEC3 FAN CONTROL SPEED#2
R80	23		24V	561707	FR SERV JCT BOX	ENGINE BRAKE SYSTEM-WT CONTROL
R81	23		24V	561707	FR SERV JCT BOX	ENGINE BRAKE SYSTEM-WT CONTROL
R82	23		24V	561707	FR SERV JCT BOX	RETARDER SYSTEM
R83	17		24V	561707	RR JCT BOX	WATER HEATER WEBASTO-PUMP
R84	16		24V	561707	RR JCT BOX	AUX. A/C RAD. FAN CLUTCH CTRL
R85	1		12V	561538	BATTERY CPT.	MASTER SWITCH
R86	21		24V	561707	FR SERVICE CPT	KNEELING SYSTEM
R87	21		24V	561707	FR SERVICE CPT	KNEELING SYSTEM
R88	21		24V	561707	FR SERVICE CPT	KNEELING SYSTEM
R91	30		24V	561707	FR JCT PANEL	VIDEO SYSTEM & TV RECEIVER
R92	16		24V	561707	A/C JCT BOX	A/C CONDENSER FAN
R93	16		24V	561707	A/C JCT BOX	A/C CONDENSER FAN
R94	16		24V	561707	A/C JCT BOX	A/C CONDENSER FAN
R95	16		24V	561707	A/C JCT BOX	A/C CONDENSER FAN
R99	9		24V	561707	RR JCT BOX	RADIATOR FAN CLUTCH
RF1	9		24V	561707	RR JCT BOX	FAN CLUTCH W. A/C OR RET.SP#1
RF2	9		24V	561707	RR JCT BOX	FAN CLUTCH W. A/C OR RET.SP#2
RF3	9		24V	560772	RR JCT BOX	TIME DELAY

NO.	PAGE	COIL	V	*PREVOST	LOCATION	FUNCTION
R1	2		24V	561991	FR JCT PANEL	ENGINE RUN (24) FR
R2	2		24V	561991	FR JCT PANEL	ENGINE RUN (12) FR
R3	1		24V	561707	BATTERY CPT.	FIELD RELAY
R4	1		24V	561005	BATTERY CPT.	STARTING MOTOR
R9	8		24V	561707	RR JCT BOX	BACK-UP LTS
R12	5		12V	562092	FR JCT PANEL	ELECTRICAL HORNS
R13	6		24V	561707	FR JCT PANEL	FOG LTS
R14	6		24V	561707	FR JCT PANEL	NIGHT'S BLINKER
R15	6		24V	561707	FR JCT PANEL	FR MARKER LTS
R16	6		24V	561707	FR JCT PANEL	IDENT. & CLEARANCE LTS
R17	6		24V	561707	RR JCT BOX	TAIL,LICENCE,MARKER-RR LTS
R18	6		24V	561707	FR JCT PANEL	DAYTIME RUN LTS-CANCEL
R19	6		24V	561707	FR JCT PANEL	HI-BEAM
R20	6		24V	561707	FR JCT PANEL	LO-BEAM
R22	3		24V	561707	FR SERV JCT BOX	DDEC III FAST IDLE SIGNAL
R23	3		24V	561707	RR JCT BOX	DDEC III 12V IGNITION
R24	4		24V	561707	BATTERY CPT.	WORLD TRANSMISSION 12V IGN.
R25	3		24V	561707	FR SERV JCT BOX	BRAKE SW-DDEC CRUISE CTR
R26	8		24V	561707	RR JCT BOX	STOP LTS
R27	27		24V	560407	GALLEY	GALLEY CHARGER
R28	27		24V	561014	GALLEY	GALLEY CHARGER
R31	15		24V	561707	FR JCT PANEL	WATER HEATER-BYPASS VALVE
R32	1		24V	561991	BAT JCT PANEL	12V RR CUT-IN RLY
R33	15		12V	561538	FR JCT PANEL	A/C BLOWER CUT-IN
R34	15		24V	561707	RR JCT BOX	A/C WARNING LT
R35	15		24V	561707	FR JCT PANEL	A/C WATER PUMP
R36	16		24V	561707	RR JCT BOX	AUX. A/C COMPRESSOR CLUTCH
R37	1		24V	561707	RR JCT BOX	GENERATOR-12VAC RLY SIGN
R38	15		24V	561005	A/C JCT BOX	A/C EVAPORATOR FAN
R38	16		24V	561707	RR JCT BOX	AUX. A/C FAN MOTOR
R39	13		24V	561707	RR JCT BOX	24V FLUORESCENT
R40	15		24V	561707	FR JCT BOX	A/C WATER VALVE
R42	1		24V	561991	BATTERY CPT.	12V FRONT CUT-IN RLY
R43	15		24V	561707	FR JCT BOX	WATER HEATER-BYPASS VALVE
R44	1		24V	561991	BATTERY CPT	12V FRONT CUT-IN RLY
R45	12		24V	561707	RR JCT BOX	READING LTS
R46	7		24V	561707	UNDER INST PANEL LH	DIRECTIONNAL LTS
R47	7		24V	561707	UNDER INST PANEL RH	DIRECTIONNAL LTS
R49	24		24V	561707	FR SERV JCT BOX	ABS - SERVICE BRAKE RLY
R50	24		24V	561707	FR SERV JCT BOX	ABS - VR2 RLY
R51	24		24V	561707	FR SERV JCT BOX	ABS - WARNING RLY
R52	24		24V	561707	FR SERV JCT BOX	ABS - VR1 RLY
R53	2		24V	561991	RR JCT BOX	ENGINE RUN 24V RR
R54	2		24V	561991	RR JCT BOX	ENGINE RUN 12V RR
R57	6		24V	561707	FR JCT PANEL	DAY'S BLINKER
R60	6		12V	561538	FR JCT PANEL	DAYTIME RUN LTS
R62	7		24V	561707	BEHIND RH CONS	RH CORNERING
R63	7		24V	561707	BEHIND RH CONS	LH CORNERING
R66	29-30		24V	561707	SND SYS JCT PAN	VIDEO SYSTEM
R67	28		24V	561707	SND SYS JCT PAN	SOUND SYSTEM RADIO
R68	28		24V	561991	SND SYS JCT PAN	SOUND SYSTEM - 24V IGNITION
R69	22		12V	562092	FR JCT PANEL	LUGG DOOR LOCK
R70	22		12V	562092	FR JCT PANEL	LUGG DOOR UNLOCK
R71	22		12V	562092	FR JCT PANEL	LUGG DOOR LOCK TT LT
R72	11		24V	561707	FR JCT PANEL	DASH EMERGENCY AISLE-LTS
R73	28-29		24V	561557	FR JCT PANEL	SOUND SYSTEM *** PRIOR REV 010
R74	22		12V	562092	RR JCT BOX	LUGG DOOR LOCK
R75	22		12V	562092	RR JCT BOX	LUGG DOOR UNLOCK
R76	8		24V	561707	RR JCT BOX	STOP LTS-ENG. BRK & RET. SYST.

RELAYS CODE (R) Page 1:1

NO.	PAGE	COIL	V	*PREVOST	LOCATION	FUNCTION
R77	7		12V	562092	UNDER DASH	AUDIBLE FLASHER RLY
R78	5		24V	561707	RR JCT BOX	DDEC3 FAN CONTROL SPEED#1
R78	30		24V	561707	LUGG.CPT.#4	INVERTER CUT OUT RLY
R79	5		24V	561707	RR JCT BOX	DDEC3 FAN CONTROL SPEED#2
R80	23		24V	561707	FR SERV JCT BOX	ENGINE BRAKE SYSTEM-WT CONTROL
R81	23		24V	561707	FR SERV JCT BOX	ENGINE BRAKE SYSTEM-WT CONTROL
R82	23		24V	561707	FR SERV JCT BOX	RETARDER SYSTEM
R83	17		24V	561707	RR JCT BOX	WATER HEATER WEBASTO-PUMP
R84	16		24V	561707	RR JCT BOX	AUX. A/C RAD. FAN CLUTCH CTRL
R85	1		12V	561538	BATTERY CPT.	MASTER SWITCH
R86	21		24V	561707	FR SERVICE CPT	KNEELING SYSTEM
R87	21		24V	561707	FR SERVICE CPT	KNEELING SYSTEM
R88	21		24V	561707	FR SERVICE CPT	KNEELING SYSTEM
R91	30		24V	561707	FR JCT PANEL	VIDEO SYSTEM & TV RECEIVER
R92	16		24V	561707	A/C JCT BOX	A/C CONDENSER FAN
R93	16		24V	561707	A/C JCT BOX	A/C CONDENSER FAN
R94	16		24V	561707	A/C JCT BOX	A/C CONDENSER FAN
R95	16		24V	561707	A/C JCT BOX	A/C CONDENSER FAN
R99	9		24V	561707	RR JCT BOX	RADIATOR FAN CLUTCH
RF1	9		24V	561707	RR JCT BOX	FAN CLUTCH W. A/C OR RET.SP#1
RF2	9		24V	561707	RR JCT BOX	FAN CLUTCH W. A/C OR RET.SP#2
RF3	9		24V	560772	RR JCT BOX	TIME DELAY

NO.	PAGE	COIL V	•PREVOST	LOCATION	FUNCTION
R1	2	24V	561991	FR JCT PANEL	ENGINE RUN (24) FR
R2	2	24V	561991	FR JCT PANEL	ENGINE RUN (12) FR
R3	1	24V	561707	BATTERY CPT.	FIELD RELAY
R4	1	24V	561005	BATTERY CPT.	STARTING MOTOR
R9	8	24V	561707	RR JCT BOX	BACK-UP LTS
R12	5	12V	562092	FR JCT PANEL	ELECTRICAL HORNS
R13	6	24V	561707	FR JCT PANEL	FOG LTS
R14	6	24V	561707	FR JCT PANEL	NIGHT'S BLINKER
R15	6	24V	561707	FR JCT PANEL	FR MARKER LTS
R16	6	24V	561707	FR JCT PANEL	IDENT. & CLEARANCE LTS
R17	6	24V	561707	RR JCT BOX	TAIL.LICENCE.MARKER-RR LTS
R18	6	24V	561707	FR JCT PANEL	DAYTIME RUN LTS-CANCEL
R19	6	24V	561707	FR JCT PANEL	HI-BEAM
R20	6	24V	561707	FR JCT PANEL	LO-BEAM
R22	3	24V	561707	FR SERV JCT BOX	DDEC III FAST IDLE SIGNAL
R23	3	24V	561707	RR JCT BOX	DDEC III 12V IGNITION
R24	4	24V	561707	BATTERY CPT.	WORLD TRANSMISSION 12V IGN.
R25	3	24V	561707	FR SERV JCT BOX	BRAKE SW-DDEC CRUISE CTR
R26	8	24V	561707	RR JCT BOX	STOP LTS
R27	27	24V	560407	GALLEY	GALLEY CHARGER
R28	27	24V	561014	GALLEY	GALLEY CHARGER
R29	16	24V	561005	A/C JCT BOX	A/C CONDENSER FAN
R30	15	24V	561005	A/C JCT BOX	A/C EVAPORATOR FAN
R31	15	24V	561707	FR JCT PANEL	WATER HEATER-BYPASS VALVE
R32	1	24V	561991	BAT JCT PANEL	12V RR CUT-IN RLY
R33	15	12V	561538	FR JCT PANEL	A/C BLOWER CUT-IN
R34	15	24V	561707	RR JCT BOX	A/C WARNING LT
R35	15	24V	561707	FR JCT PANEL	A/C WATER PUMP
R36	16	24V	561707	RR JCT BOX	AUX. A/C COMPRESSOR CLUTCH
R37	1	24V	561707	RR JCT BOX	GENERATOR-12VAC RLY SIGN
R38	16	24V	561707	RR JCT BOX	AUX. A/C FAN MOTOR
R39	13	24V	561707	RR JCT BOX	24V FLUORESCENT
R40	15	24V	561707	FR JCT BOX	A/C WATER VALVE
R40	16	24V	561014	A/C JCT BOX	A/C CONDENSER FAN
R41	16	24V	561005	A/C JCT BOX	A/C CONDENSER FAN
R42	1	24V	561991	BATTERY CPT.	12V FRONT CUT-IN RLY
R43	15	24V	561707	FR JCT BOX	WATER HEATER-BYPASS VALVE
R44	1	24V	561991	BATTERY CPT	12V FRONT CUT-IN RLY
R45	12	24V	561707	RR JCT BOX	READING LTS
R46	7	24V	561707	UNDER INST PANEL	LH DIRECTIONNAL LTS
R47	7	24V	561707	UNDER INST PANEL	RH DIRECTIONNAL LTS
R49	24	24V	561707	FR SERV JCT BOX	ABS - SERVICE BRAKE RLY
R50	24	24V	561707	FR SERV JCT BOX	ABS - VR2 RLY
R51	24	24V	561707	FR SERV JCT BOX	ABS - WARNING RLY
R52	24	24V	561707	FR SERV JCT BOX	ABS - VR1 RLY
R53	2	24V	561991	RR JCT BOX	ENGINE RUN 24V RR
R54	2	24V	561991	RR JCT BOX	ENGINE RUN 12V RR
R57	6	24V	561707	FR JCT PANEL	DAY'S BLINKER
R60	6	12V	561538	FR JCT PANEL	DAYTIME RUN LTS
R62	7	24V	561707	BEHIND RH CONS	RH CORNERING
R63	7	24V	561707	BEHIND RH CONS	LH CORNERING
R66	29-30	24V	561707	SND SYS JCT PAN	VIDEO SYSTEM
R67	28	24V	561707	SND SYS JCT PAN	SOUND SYSTEM RADIO
R68	28	24V	561991	SND SYS JCT PAN	SOUND SYSTEM - 24V IGNITION
R69	22	12V	562092	FR JCT PANEL	LUGG DOOR LOCK
R70	22	12V	562092	FR JCT PANEL	LUGG DOOR UNLOCK
R71	22	12V	562092	FR JCT PANEL	LUGG DOOR LOCK TT LT
R72	11	24V	561707	FR JCT PANEL	DASH EMERGENCY AISLE-LTS

RELAYS CODE (R) PAGE I : 1

NO.	PAGE	COIL V	•PREVOST	LOCATION	FUNCTION
R73	28-29	24V	561557	FR JCT PANEL	SOUND SYSTEM *** PRIOR REV 010
R74	22	12V	562092	RR JCT BOX	LUGG DOOR LOCK
R75	22	12V	562092	RR JCT BOX	LUGG DOOR UNLOCK
R76	8	24V	561707	RR JCT BOX	STOP LTS-ENG. BRK & RET. SYST.
R77	7	12V	562092	UNDER DASH	AUDIBLE FLASHER RLY
R78	5	24V	561707	RR JCT BOX	DDEC3 FAN CONTROL SPEED•1
R78	30	24V	561707	LUGG.CPT.•4	INVERTER CUT OUT RLY
R79	5	24V	561707	RR JCT BOX	DDEC3 FAN CONTROL SPEED•2
R80	23	24V	561707	FR SERV JCT BOX	ENGINE BRAKE SYSTEM-WT CONTROL
R81	23	24V	561707	FR SERV JCT BOX	ENGINE BRAKE SYSTEM-WT CONTROL
R82	23	24V	561707	FR SERV JCT BOX	RETARDER SYSTEM
R83	17	24V	561707	RR JCT BOX	WATER HEATER WEBASTO-PUMP
R84	16	24V	561707	RR JCT BOX	AUX. A/C RAD. FAN CLUTCH CTRL
R85	1	12V	561538	BATTERY CPT.	MASTER SWITCH
R86	21	24V	561707	FR SERVICE CPT	KNEELING SYSTEM
R87	21	24V	561707	FR SERVICE CPT	KNEELING SYSTEM
R88	21	24V	561707	FR SERVICE CPT	KNEELING SYSTEM
R91	30	24V	561707	FR JCT PANEL	VIDEO SYSTEM & TV RECEIVER
R99	9	24V	561707	RR JCT BOX	RADIATOR FAN CLUTCH
RF1	9	24V	561707	RR JCT BOX	FAN CLUTCH W. A/C OR RET.SP•1
RF2	9	24V	561707	RR JCT BOX	FAN CLUTCH W. A/C OR RET.SP•2
RF3	9	24V	560772	RR JCT BOX	TIME DELAY

NO.	PAGE	COIL V	•PREVOST	LOCATION	FUNCTION
R1	2	24V	561991	FR JCT PANEL	ENGINE RUN (24) FR
R2	2	24V	561991	FR JCT PANEL	ENGINE RUN (12) FR
R3	1	24V	561707	BATTERY CPT.	FIELD RELAY
R4	1	24V	561005	BATTERY CPT.	STARTING MOTOR
R9	8	24V	561707	RR JCT BOX	BACK-UP LTS
R12	5	12V	562092	FR JCT PANEL	ELECTRICAL HORNS
R13	6	24V	561707	FR JCT PANEL	FOG LTS
R14	6	24V	561707	FR JCT PANEL	NIGHT'S BLINKER
R15	6	24V	561707	FR JCT PANEL	FR MARKER LTS
R16	6	24V	561707	FR JCT PANEL	IDENT. & CLEARANCE LTS
R17	6	24V	561707	RR JCT BOX	TAIL,LICENCE,MARKER-RR LTS
R18	6	24V	561707	FR JCT PANEL	DAYTIME RUN LTS-CANCEL
R19	6	24V	561707	FR JCT PANEL	HI-BEAM
R20	6	24V	561707	FR JCT PANEL	LO-BEAM
R22	3	24V	561707	FR SERV JCT BOX	DDEC III FAST IDLE SIGNAL
R23	3	24V	561707	RR JCT BOX	DDEC III 12V IGNITION
R24	4	24V	561707	BATTERY CPT.	WORLD TRANSMISSION 12V IGN.
R25	3	24V	561707	FR SERV JCT BOX	BRAKE SW-DDEC CRUISE CTR
R26	8	24V	561707	RR JCT BOX	STOP LTS
R27	27	24V	560407	GALLEY	GALLEY CHARGER
R28	27	24V	561014	GALLEY	GALLEY CHARGER
R29	16	24V	561005	A/C JCT BOX	A/C CONDENSER FAN
R30	15	24V	561005	A/C JCT BOX	A/C EVAPORATOR FAN
R31	15	24V	561707	FR JCT PANEL	WATER HEATER-BYPASS VALVE
R32	1	24V	561991	BAT JCT PANEL	12V RR CUT-IN RLY
R33	15	12V	561538	FR JCT PANEL	A/C BLOWER CUT-IN
R34	15	24V	561707	RR JCT BOX	A/C WARNING LT
R35	15	24V	561707	FR JCT PANEL	A/C WATER PUMP
R36	16	24V	561707	RR JCT BOX	AUX. A/C COMPRESSOR CLUTCH
R37	1	24V	561707	RR JCT BOX	GENERATOR-12VAC RLY SIGN
R38	16	24V	561707	RR JCT BOX	AUX. A/C FAN MOTOR
R39	13	24V	561707	RR JCT BOX	24V FLUORESCENT
R40	15	24V	561707	FR JCT BOX	A/C WATER VALVE
R40	16	24V	561014	A/C JCT BOX	A/C CONDENSER FAN
R41	16	24V	561005	A/C JCT BOX	A/C CONDENSER FAN
R42	1	24V	561991	BATTERY CPT.	12V FRONT CUT-IN RLY
R43	15	24V	561707	FR JCT BOX	WATER HEATER-BYPASS VALVE
R44	1	24V	561991	BATTERY CPT	12V FRONT CUT-IN RLY
R45	12	24V	561707	RR JCT BOX	READING LTS
R46	7	24V	561707	UNDER INST PANEL	LH DIRECTIONNAL LTS
R47	7	24V	561707	UNDER INST PANEL	RH DIRECTIONNAL LTS
R49	24	24V	561707	FR SERV JCT BOX	ABS - ENGINE BRAKE
R52	24	24V	561707	FR SERV JCT BOX	ABS - RETARDER
R53	2	24V	561991	RR JCT BOX	ENGINE RUN 24V RR
R54	2	24V	561991	RR JCT BOX	ENGINE RUN 12V RR
R57	6	24V	561707	FR JCT PANEL	DAY'S BLINKER
R60	6	12V	561538	FR JCT PANEL	DAYTIME RUN LTS
R62	7	24V	561707	BEHIND RH CONS	RH CORNERING
R63	7	24V	561707	BEHIND RH CONS	LH CORNERING
R66	29-30	24V	561707	SND SYS JCT PAN	VIDEO SYSTEM
R67	28	24V	561707	SND SYS JCT PAN	SOUND SYSTEM RADIO
R68	28	24V	561991	SND SYS JCT PAN	SOUND SYSTEM - 24V IGNITION
R69	22	12V	562092	FR JCT PANEL	LUGG DOOR LOCK
R70	22	12V	562092	FR JCT PANEL	LUGG DOOR UNLOCK
R71	22	12V	562092	FR JCT PANEL	LUGG DOOR LOCK TT LT
R72	11	24V	561707	FR JCT PANEL	DASH EMERGENCY AISLE-LTS

RELAYS CODE (R) PAGE I : 1

NO.	PAGE	COIL V	•PREVOST	LOCATION	FUNCTION
R73	28-29	24V	561557	FR JCT PANEL	SOUND SYSTEM *** PRIOR REV 010
R74	22	12V	562092	RR JCT BOX	LUGG DOOR LOCK
R75	22	12V	562092	RR JCT BOX	LUGG DOOR UNLOCK
R76	8	24V	561707	RR JCT BOX	STOP LTS-ENG. BRK & RET. SYST.
R77	7	12V	562092	UNDER DASH	AUDIBLE FLASHER RLY
R78	5	24V	561707	RR JCT BOX	DDEC3 FAN CONTROL SPEED•1
R78	30	24V	561707	LUGG.CPT.•4	INVERTER CUT OUT RLY
R79	5	24V	561707	RR JCT BOX	DDEC3 FAN CONTROL SPEED•2
R80	23	24V	561707	FR SERV JCT BOX	ENGINE BRAKE SYSTEM-WT CONTROL
R82	23	24V	561707	FR SERV JCT BOX	RETARDER SYSTEM
R83	17	24V	561707	RR JCT BOX	WATER HEATER WEBASTO-PUMP
R84	16	24V	561707	RR JCT BOX	AUX. A/C RAD. FAN CLUTCH CTRL
R85	1	12V	561538	BATTERY CPT.	MASTER SWITCH
R86	21	24V	561707	FR SERVICE CPT	KNEELING SYSTEM
R87	21	24V	561707	FR SERVICE CPT	KNEELING SYSTEM
R88	21	24V	561707	FR SERVICE CPT	KNEELING SYSTEM
R91	30	24V	561707	FR JCT PANEL	VIDEO SYSTEM & TV RECEIVER
R99	9	24V	561707	RR JCT BOX	RADIATOR FAN CLUTCH
RF1	9	24V	561707	RR JCT BOX	FAN CLUTCH W. A/C OR RET.SP•1
RF2	9	24V	561707	RR JCT BOX	FAN CLUTCH W. A/C OR RET.SP•2
RF3	9	24V	560772	RR JCT BOX	TIME DELAY

NO.	PAGE	COIL V	•PREVOST	LOCATION	FUNCTION
R1	2	24V	561991	FR JCT PANEL	ENGINE RUN (24) FR
R2	2	24V	561991	FR JCT PANEL	ENGINE RUN (12) FR
R3	1	24V	561707	BATTERY CPT.	FIELD RELAY
R4	1	24V	561005	BATTERY CPT.	STARTING MOTOR
R9	8	24V	561707	RR JCT BOX	BACK-UP LTS
R12	5	12V	562092	FR JCT PANEL	ELECTRICAL HORNS
R13	6	24V	561707	FR JCT PANEL	FOG LTS
R14	6	24V	561707	FR JCT PANEL	NIGHT'S BLINKER
R15	6	24V	561707	FR JCT PANEL	FR MARKER LTS
R16	6	24V	561707	FR JCT PANEL	IDENT. & CLEARANCE LTS
R17	6	24V	561707	RR JCT BOX	TAIL.LICENCE.MARKER-RR LTS
R18	6	24V	561707	FR JCT PANEL	DAYTIME RUN LTS-CANCEL
R19	6	24V	561707	FR JCT PANEL	HI-BEAM
R20	6	24V	561707	FR JCT PANEL	LO-BEAM
R22	3	24V	561707	FR SERV JCT BOX	DDEC III FAST IDLE SIGNAL
R23	3	24V	561707	RR JCT BOX	DDEC III 12V IGNITION
R24	4	24V	561707	BATTERY CPT.	WORLD TRANSMISSION 12V IGN.
R25	3	24V	561707	FR SERV JCT BOX	BRAKE SW-DDEC CRUISE CTR
R26	8	24V	561707	RR JCT BOX	STOP LTS
R27	27	24V	560407	GALLEY	GALLEY CHARGER
R28	27	24V	561014	GALLEY	GALLEY CHARGER
R29	16	24V	561005	A/C JCT BOX	A/C CONDENSER FAN
R30	15	24V	561005	A/C JCT BOX	A/C EVAPORATOR FAN
R31	15	24V	561707	FR JCT PANEL	WATER HEATER-BYPASS VALVE
R32	1	24V	561991	BAT JCT PANEL	12V RR CUT-IN RLY
R33	15	12V	561538	FR JCT PANEL	A/C BLOWER CUT-IN
R34	15	24V	561707	RR JCT BOX	A/C WARNING LT
R35	15	24V	561707	FR JCT PANEL	A/C WATER PUMP
R36	16	24V	561707	RR JCT BOX	AUX. A/C COMPRESSOR CLUTCH
R37	1	24V	561707	RR JCT BOX	GENERATOR-12VAC RLY SIGN
R38	16	24V	561707	RR JCT BOX	AUX. A/C FAN MOTOR
R39	13	24V	561707	RR JCT BOX	24V FLUORESCENT
R40	15	24V	561707	FR JCT BOX	A/C WATER VALVE
R40	16	24V	561014	A/C JCT BOX	A/C CONDENSER FAN
R41	16	24V	561005	A/C JCT BOX	A/C CONDENSER FAN
R42	1	24V	561991	BATTERY CPT.	12V FRONT CUT-IN RLY
R43	15	24V	561707	FR JCT BOX	WATER HEATER-BYPASS VALVE
R44	1	24V	561991	BATTERY CPT	12V FRONT CUT-IN RLY
R45	12	24V	561707	RR JCT BOX	READING LTS
R46	7	24V	561707	UNDER INST PANEL	LH DIRECTIONNAL LTS
R47	7	24V	561707	UNDER INST PANEL	RH DIRECTIONNAL LTS
R49	24	24V	561707	FR SERV JCT BOX	ABS - ENGINE BRAKE
R52	24	24V	561707	FR SERV JCT BOX	ABS SYSTEM
R53	2	24V	561991	RR JCT BOX	ENGINE RUN 24V RR
R54	2	24V	561991	RR JCT BOX	ENGINE RUN 12V RR
R57	6	24V	561707	FR JCT PANEL	DAY'S BLINKER
R60	6	12V	561538	FR JCT PANEL	DAYTIME RUN LTS
R62	7	24V	561707	BEHIND RH CONS	RH CORNERING
R63	7	24V	561707	BEHIND RH CONS	LH CORNERING
R66	29-30	24V	561707	SND SYS JCT PAN	VIDEO SYSTEM
R67	28	24V	561707	SND SYS JCT PAN	SOUND SYSTEM RADIO
R68	28	24V	561991	SND SYS JCT PAN	SOUND SYSTEM - 24V IGNITION
R69	22	12V	562092	FR JCT PANEL	LUGG DOOR LOCK
R70	22	12V	562092	FR JCT PANEL	LUGG DOOR UNLOCK
R71	22	12V	562092	FR JCT PANEL	LUGG DOOR LOCK TT LT
R72	11	24V	561707	FR JCT PANEL	DASH EMERGENCY AISLE-LTS

RELAYS CODE (R) PAGE I : 1

NO.	PAGE	COIL V	•PREVOST	LOCATION	FUNCTION
R73	28-29	24V	561557	FR JCT PANEL	SOUND SYSTEM *** PRIOR REV 010
R74	22	12V	562092	RR JCT BOX	LUGG DOOR LOCK
R75	22	12V	562092	RR JCT BOX	LUGG DOOR UNLOCK
R76	8	24V	561707	RR JCT BOX	STOP LTS-ENG. BRK & RET. SYST.
R77	7	12V	562092	UNDER DASH	AUDIBLE FLASHER RLY
R78	5	24V	561707	RR JCT BOX	DDEC3 FAN CONTROL SPEED•1
R78	30	24V	561707	LUGG.CPT.•4	INVERTER CUT OUT RLY
R79	5	24V	561707	RR JCT BOX	DDEC3 FAN CONTROL SPEED•2
R80	23	24V	561707	FR SERV JCT BOX	ENGINE BRAKE SYSTEM-WT CONTROL
R82	23	24V	561707	FR SERV JCT BOX	RETARDER SYSTEM
R83	17	24V	561707	RR JCT BOX	WATER HEATER WEBASTO-PUMP
R84	16	24V	561707	RR JCT BOX	AUX. A/C RAD. FAN CLUTCH CTRL
R85	1	12V	561538	BATTERY CPT.	MASTER SWITCH
R86	21	24V	561707	FR SERVICE CPT	KNEELING SYSTEM
R87	21	24V	561707	FR SERVICE CPT	KNEELING SYSTEM
R88	21	24V	561707	FR SERVICE CPT	KNEELING SYSTEM
R91	30	24V	561707	FR JCT PANEL	VIDEO SYSTEM & TV RECEIVER
R99	9	24V	561707	RR JCT BOX	RADIATOR FAN CLUTCH
RF1	9	24V	561707	RR JCT BOX	FAN CLUTCH W. A/C OR RET.SP•1
RF2	9	24V	561707	RR JCT BOX	FAN CLUTCH W. A/C OR RET.SP•2
RF3	9	24V	560772	RR JCT BOX	TIME DELAY

NO.	PAGE	COIL V	•PREVOST	LOCATION	FUNCTION
RA1	1	24V	561707	RR JCT BOX	ALTERNATOR BOSCH
R1	2	24V	561991	FR JCT PANEL	ENGINE RUN (24) FR
R2	2	24V	561991	FR JCT PANEL	ENGINE RUN (12) FR
R4	1	24V	561005	BATTERY CPT.	STARTING MOTOR
R9	8	24V	561707	RR JCT BOX	BACK-UP LTS
R12	5	12V	562092	FR JCT PANEL	ELECTRICAL HORNS
R13	6	24V	561707	FR JCT PANEL	FOG LTS
R14	6	24V	561707	FR JCT PANEL	NIGHT'S BLINKER
R15	6	24V	561707	FR JCT PANEL	FR MARKER LTS
R16	6	24V	561707	FR JCT PANEL	IDENT. & CLEARANCE LTS
R17	6	24V	561707	RR JCT BOX	TAIL.LICENCE.MARKER-RR LTS
R18	6	24V	561707	FR JCT PANEL	DAYTIME RUN LTS-CANCEL
R19	6	24V	561707	FR JCT PANEL	HI-BEAM
R20	6	24V	561707	FR JCT PANEL	LO-BEAM
R22	3	24V	561707	FR SERV JCT BOX	DDEC III FAST IDLE SIGNAL
R23	3	24V	561707	RR JCT BOX	DDEC III 12V IGNITION
R24	4	24V	561707	BATTERY CPT.	WORLD TRANSMISSION 12V IGN.
R25	3	24V	561707	FR SERV JCT BOX	BRAKE SW-DDEC CRUISE CTR
R26	8	24V	561707	RR JCT BOX	STOP LTS
R27	27	24V	560407	GALLEY	GALLEY CHARGER
R28	27	24V	561014	GALLEY	GALLEY CHARGER
R29	16	24V	561005	A/C JCT BOX	A/C CONDENSER FAN
R30	15	24V	561005	A/C JCT BOX	A/C EVAPORATOR FAN
R31	15	24V	561707	FR JCT PANEL	A/C WATER PUMP
R32	1	24V	561991	BAT JCT PANEL	12V RR CUT-IN RLY
R33	15	24V	561707	FR JCT PANEL	A/C BLOWER CUT-IN
R34	15	24V	561707	RR JCT BOX	A/C WARNING LT
R35	15	24V	561707	FR JCT BOX	A/C WATER VALVE
R36	16	24V	561707	RR JCT BOX	AUX. A/C COMPRESSOR CLUTCH
R38	16	24V	561707	RR JCT BOX	AUX. A/C FAN MOTOR
R39	13	24V	561707	RR JCT BOX	24V FLUORESCENT
R40	16	24V	561014	A/C JCT BOX	A/C CONDENSER FAN
R41	16	24V	561005	A/C JCT BOX	A/C CONDENSER FAN
R42	1	24V	561991	BATTERY CPT.	12V FRONT CUT-IN RLY
R43	15	24V	561707	FR JCT PANEL	WATER HEATER-BYPASS VALVE
R44	1	24V	561991	BATTERY CPT	12V FRONT CUT-IN RLY
R45	12	24V	561707	RR JCT BOX	READING LTS
R46	7	24V	561707	UNDER INST PANEL	LH DIRECTIONNAL LTS
R47	7	24V	561707	UNDER INST PANEL	RH DIRECTIONNAL LTS
R49	24	24V	561707	FR SERV JCT BOX	ABS - ENGINE BRAKE
R52	24	24V	561707	FR SERV JCT BOX	ABS SYSTEM
R53	2	24V	561991	RR JCT BOX	ENGINE RUN 24V RR
R54	2	24V	561991	RR JCT BOX	ENGINE RUN 12V RR
R57	6	24V	561707	FR JCT PANEL	DAY'S BLINKER
R60	6	24V	561707	FR JCT PANEL	DAYTIME RUN LTS
R62	7	24V	561707	BEHIND RH CONS	RH CORNERING
R63	7	24V	561707	BEHIND RH CONS	LH CORNERING
R66	29-30	24V	561707	SND SYS JCT PAN	VIDEO SYSTEM
R67	28	24V	561707	SND SYS JCT PAN	SOUND SYSTEM RADIO
R68	28	24V	561991	SND SYS JCT PAN	SOUND SYSTEM - 24V IGNITION
R69	22	12V	562092	FR JCT PANEL	LUGG DOOR LOCK
R70	22	12V	562092	FR JCT PANEL	LUGG DOOR UNLOCK
R71	22	12V	562092	FR JCT PANEL	LUGG DOOR LOCK TT LT
R72	11	24V	561707	FR JCT PANEL	DASH EMERGENCY AISLE-LTS

RELAYS CODE (R) PAGE I : 1

NO.	PAGE	COIL V	•PREVOST	LOCATION	FUNCTION
R73	28-29	24V	561557	FR JCT PANEL	SOUND SYSTEM *** PRIOR REV 010
R74	22	12V	562092	RR JCT BOX	LUGG DOOR LOCK
R75	22	12V	562092	RR JCT BOX	LUGG DOOR UNLOCK
R76	8	24V	561707	RR JCT BOX	STOP LTS-ENG. BRK & RET. SYST.
R77	7	12V	562092	UNDER DASH	AUDIBLE FLASHER RLY
R78	5	24V	561707	RR JCT BOX	DDEC3 FAN CONTROL SPEED•1
R78	30	24V	561707	LUGG.CPT.•4	INVERTER CUT OUT RLY
R79	5	24V	561707	RR JCT BOX	DDEC3 FAN CONTROL SPEED•2
R80	23	24V	561707	FR SERV JCT BOX	ENGINE BRAKE SYSTEM-WT CONTROL
R82	23	24V	561707	FR SERV JCT BOX	RETARDER SYSTEM
R83	17	24V	561707	RR JCT BOX	WATER HEATER WEBASTO-PUMP
R84	16	24V	561707	RR JCT BOX	AUX. A/C RAD. FAN CLUTCH CTRL
R85	1	24V	561707	BATTERY CPT.	MASTER SWITCH
R86	21	24V	561707	FR SERVICE CPT	KNEELING SYSTEM
R87	21	24V	561707	FR SERVICE CPT	KNEELING SYSTEM
R88	21	24V	561707	FR SERVICE CPT	KNEELING SYSTEM
R91	30	24V	561707	FR JCT PANEL	VIDEO SYSTEM & TV RECEIVER
R99	9	24V	561707	RR JCT BOX	RADIATOR FAN CLUTCH
RF1	9	24V	561707	RR JCT BOX	FAN CLUTCH W. A/C OR RET.SP•1
RF2	9	24V	561707	RR JCT BOX	FAN CLUTCH W. A/C OR RET.SP•2
RF3	9	24V	560772	RR JCT BOX	TIME DELAY

NO.	PAGE	OHM(S)	#PREVOST	LOCATION	FUNCTION
RS1	3	11 K	562307	FR SERV JCT BOX	DDEC III-FAST IDLE
RS2	3	3.6 K	562306	FR SERV JCT BOX	DDEC III-FAST IDLE
RS3	6	1 (2)	561537	FR SERV. COMPT.	FOG LT - RH
RS4	6	1 (2)	561537	FR SERV. COMPT.	FOG LT - LH
RS11	16	2	062289	REAR A/C AUX.	A/C AUXILIAIRE FAN
RS12	16	2	062289	REAR A/C AUX.	A/C AUXILIAIRE FAN
RS13	16	470 K	061962	RR JCT BOX	AUX. A/C TD COMPR. CLUTCH
RS14	6	.82 (2)	060806	FR SERV. COMPT.	DAYTIME RUN LTS
RS15	12	33	063073	RR JCT BOX	COMPR CLUTCH TIME DELAY ON
RS16	31	80	562108	FR DEST. SIGN	FR DESTINATION SIGN
RS17	5	220	562498	UNDER DASH	FIRE ALARM

RESISTOR CODE (RS) Page J : 1

NO.	PAGE	OHM(S)	#PREVOST	LOCATION	FUNCTION

RESISTOR CODE (RS)

Page J : 1

NO.	PAGE	OHM(S)	*PREVOST	LOCATION	FUNCTION
RS1	3	11 K	562307	FR SERV JCT BOX	DDEC III-FAST IDLE
RS2	3	3.6 K	562306	FR SERV JCT BOX	DDEC III-FAST IDLE
RS3	6	1 (2)	561537	FR SERV. COMPT.	FOG LT - RH
RS4	6	1 (2)	561537	FR SERV. COMPT.	FOG LT - LH
RS11	16	2	062289	REAR A/C AUX.	A/C AUXILIAIRE FAN
RS12	16	2	062289	REAR A/C AUX.	A/C AUXILIAIRE FAN
RS13	16	470 K	061962	RR JCT BOX	AUX. A/C TD COMPR. CLUTCH
RS14	6	.82 (2)	060806	FR SERV. COMPT.	DAYTIME RUN LTS
RS15	12	33	063073	RR JCT BOX	COMPR CLUTCH TIME DELAY ON
RS16	31	80	562108	FR DEST. SIGN	FR DESTINATION SIGN
RS17	5	220	562498	UNDER DASH	FIRE ALARM
RS18	9	75 K	064208	RR JCT BOX	RAD. FAN CLUTCH W. A/C OR RETARD.

RESISTOR CODE (RS) Page J : 1

NO. PAGE OHM(S) *PREVOST LOCATION FUNCTION

NO.	PAGE	OHM(S)	•PREVOST	LOCATION	FUNCTION
RS1	3	11 K	562307	FR SERV JCT BOX	DDEC III-FAST IDLE
RS2	3	3.6 K	562306	FR SERV JCT BOX	DDEC III-FAST IDLE
RS3	6	1 (2)	561537	FR SERV. COMPT.	FOG LT - RH
RS4	6	1 (2)	561537	FR SERV. COMPT.	FOG LT - LH
RS11	16	2	062289	REAR A/C AUX.	A/C AUXILIAIRE FAN
RS12	16	2	062289	REAR A/C AUX.	A/C AUXILIAIRE FAN
RS13	16	470 K	061962	RR JCT BOX	AUX. A/C TD COMPR. CLUTCH
RS14	6	.82 (2)	060806	FR SERV. COMPT.	DAYTIME RUN LTS
RS15	12	33	063073	RR JCT BOX	COMPR CLUTCH TIME DELAY ON
RS16	31	80	562108	FR DEST. SIGN	FR DESTINATION SIGN
RS17	5	220	562498	UNDER DASH	FIRE ALARM
RS18	9	75 K	064208	RR JCT BOX	RAD. FAN CLUTCH W./ A/C OR RET.
RS36	16	10	064907	COND. CPT.	CURRENT LIMITER FOR RELAY
RS37	16	5	064907	COND. CPT.	CURRENT LIMITER FOR RELAY

RESISTOR CODE (RS) PAGE J : 1

NO.	PAGE	OHM(S)	•PREVOST	LOCATION	FUNCTION

WIRING DIAGRAM KEYS

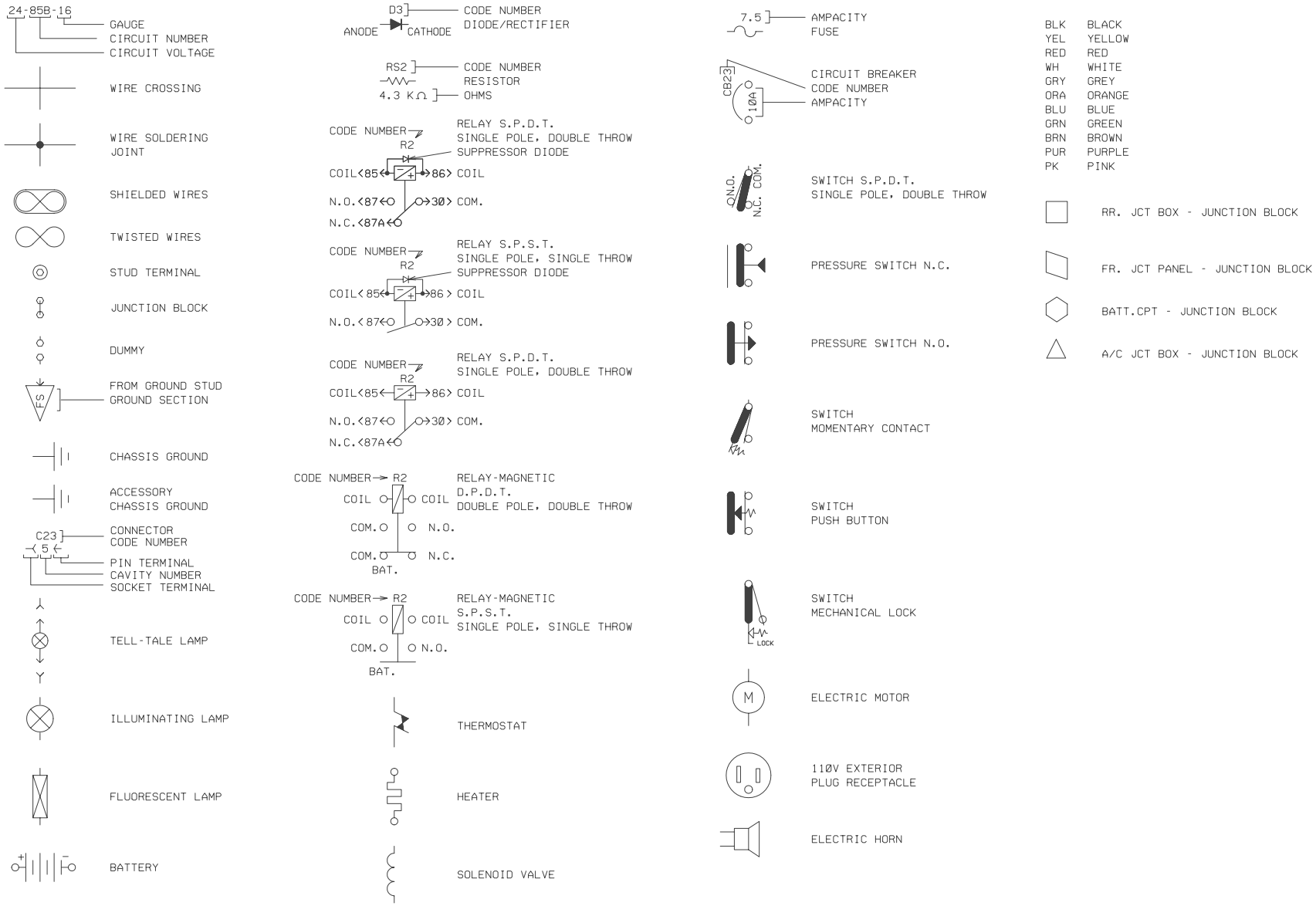

PREVOST CAR inc.	WIRING DIAGRAM	NO: D060872	P.K	REVISION 000

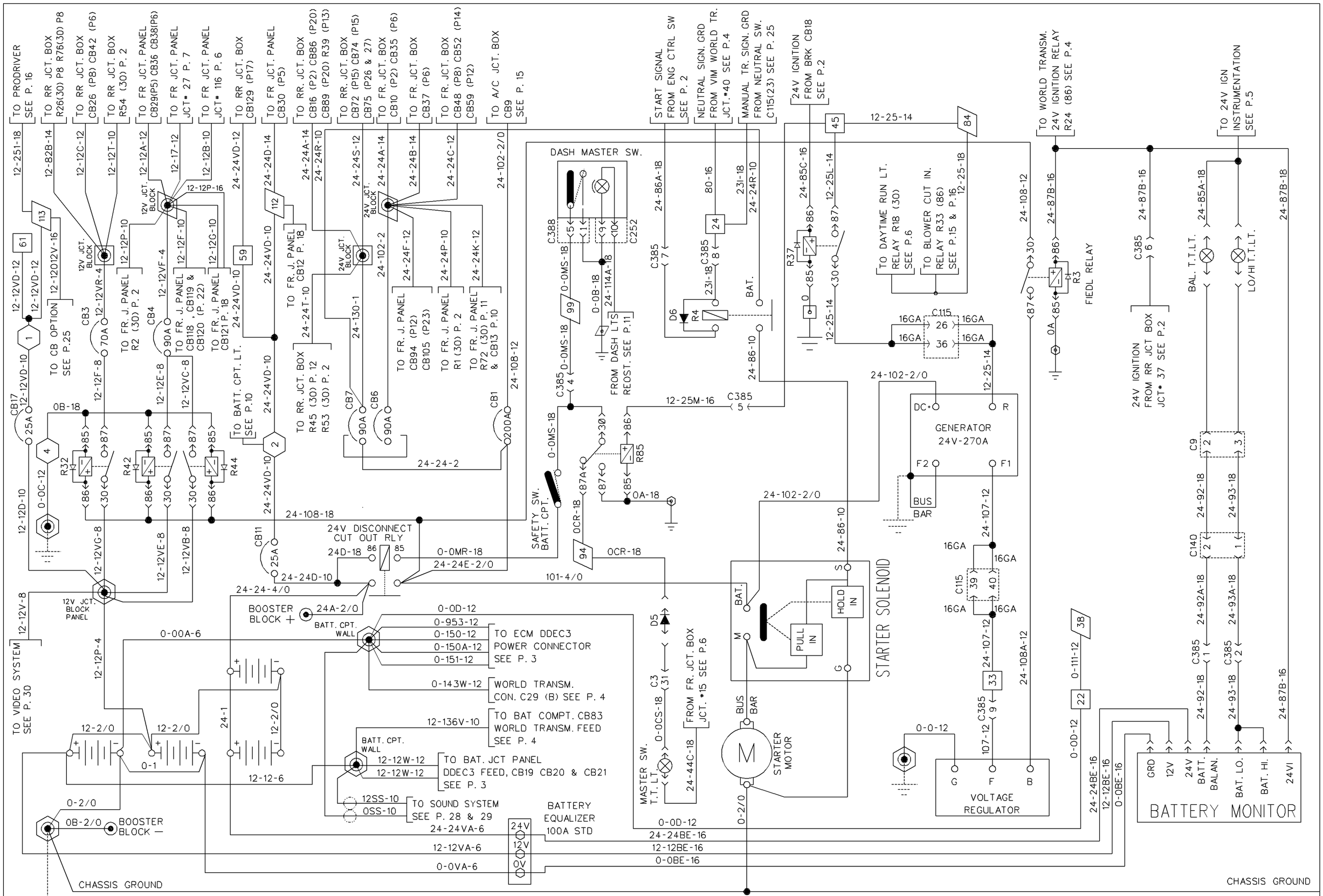

CHARGING SYSTEM

PREVOST CAR inc.	WIRING DIAGRAM	NO: D060872	P. 1	REVISION 001

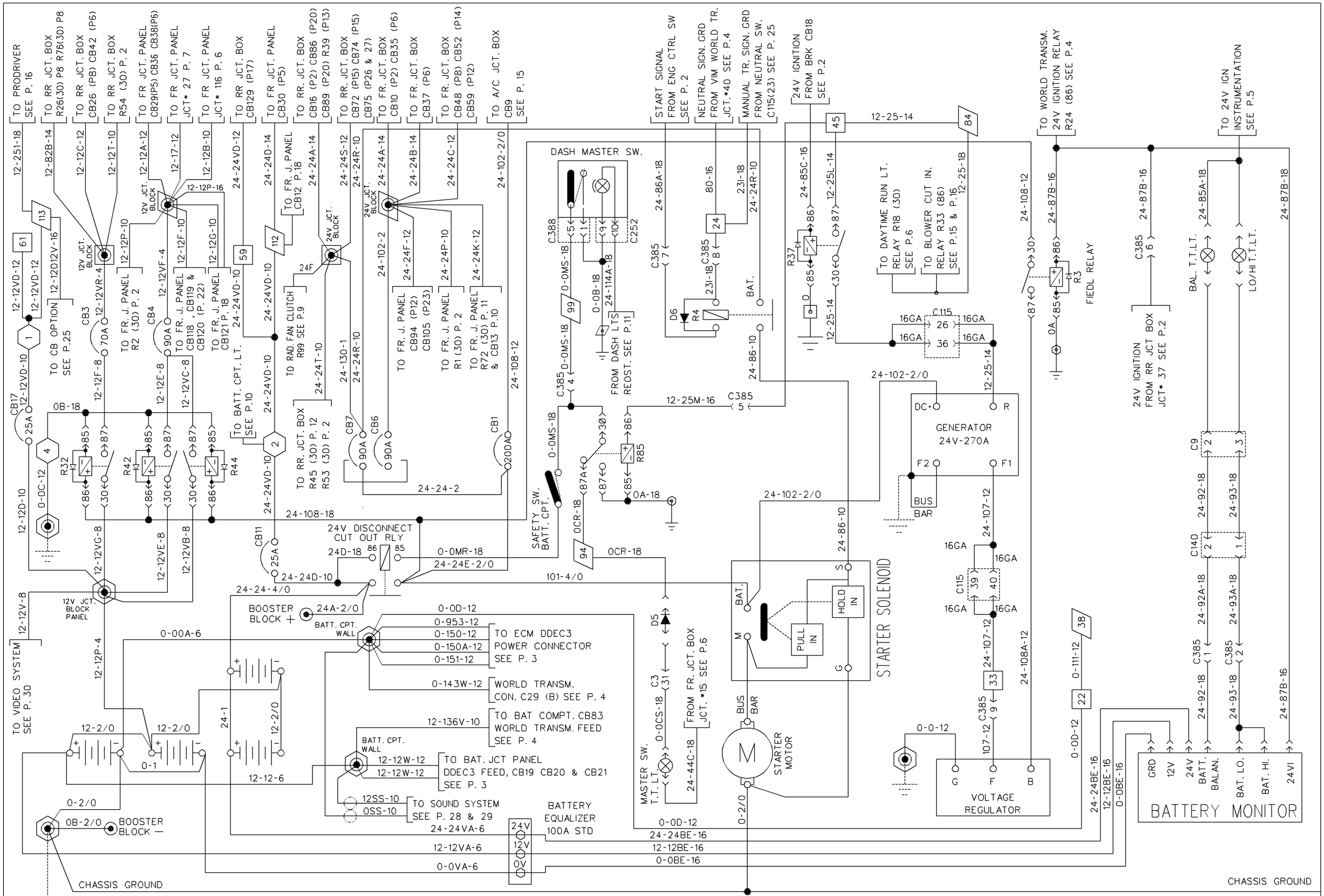

CHARGING SYSTEM

PREVOST CAR inc.	WIRING DIAGRAM	NO: D060872	P. 1	REVISION 007

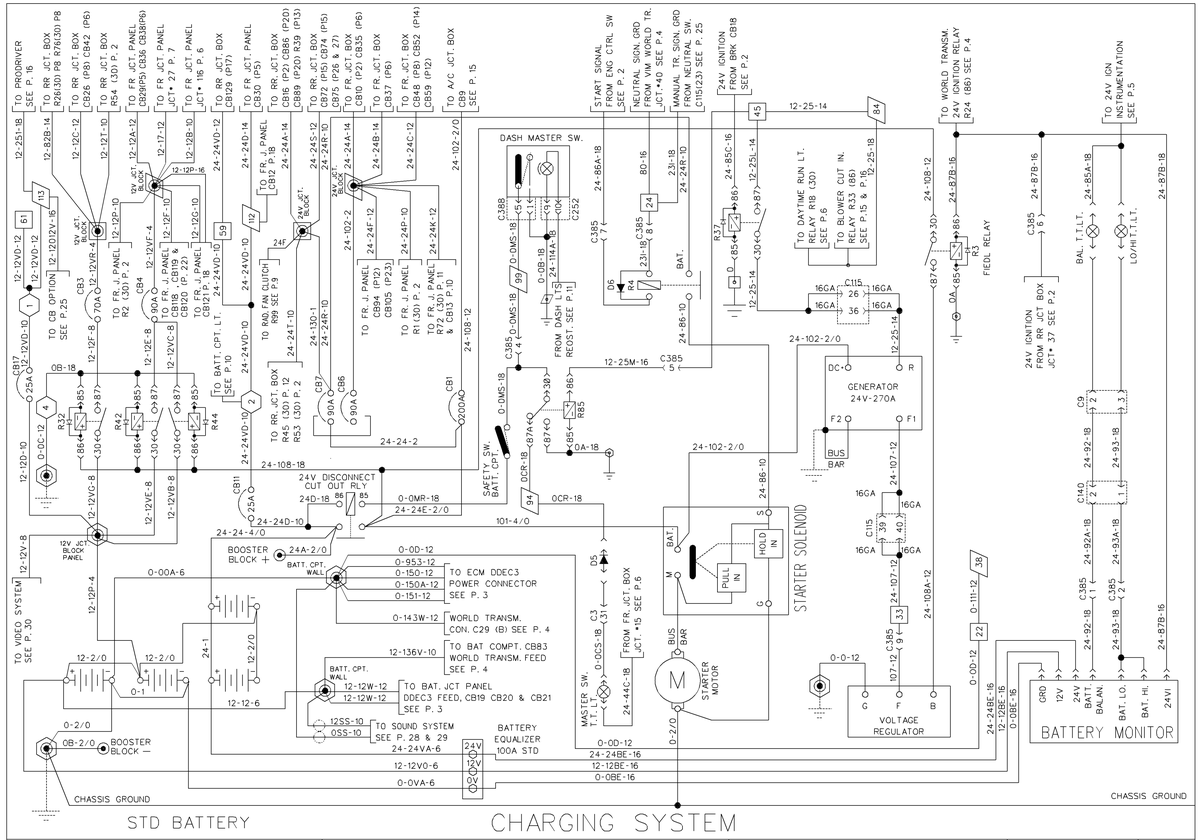

PREVOST CAR inc. | WIRING DIAGRAM | NO: D060872 | P. 1 1/2 | REVISION 009

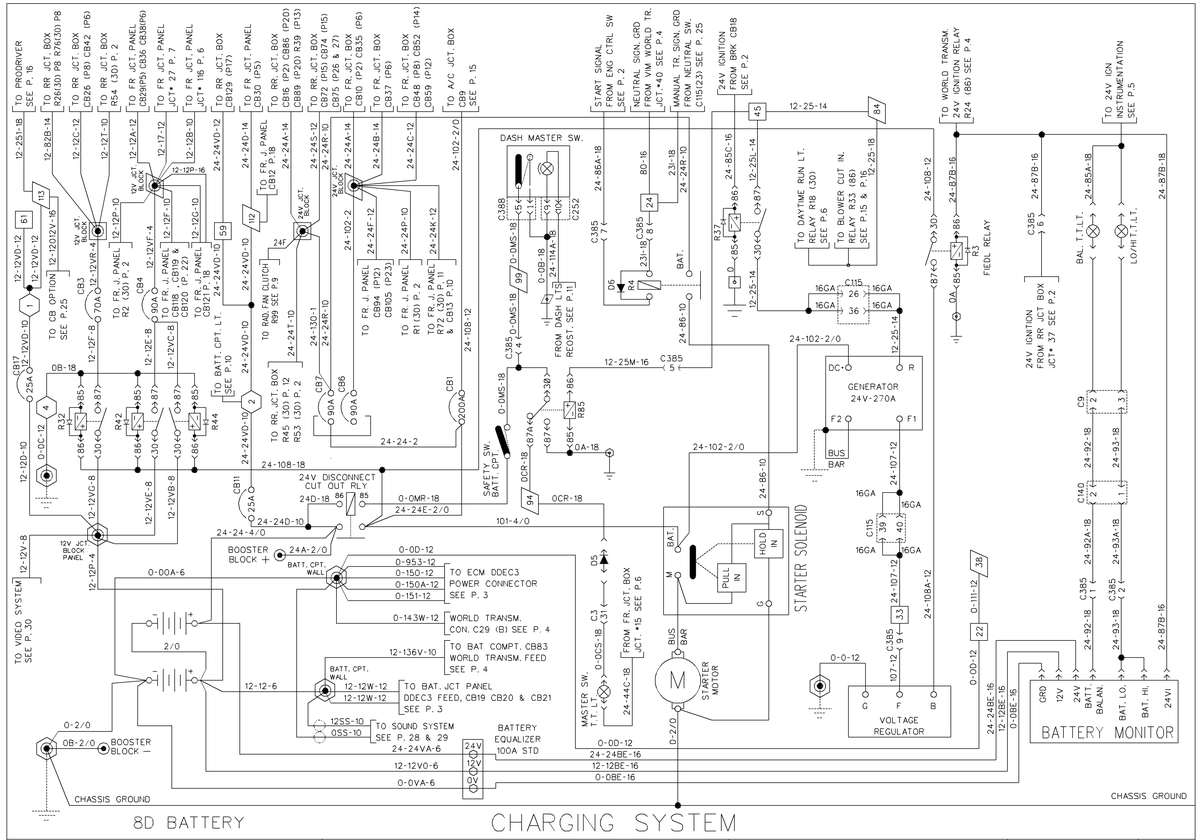

PREVOST CAR inc. | WIRING DIAGRAM | NO: D060872 | P. 1 2/2 | REVISION 009

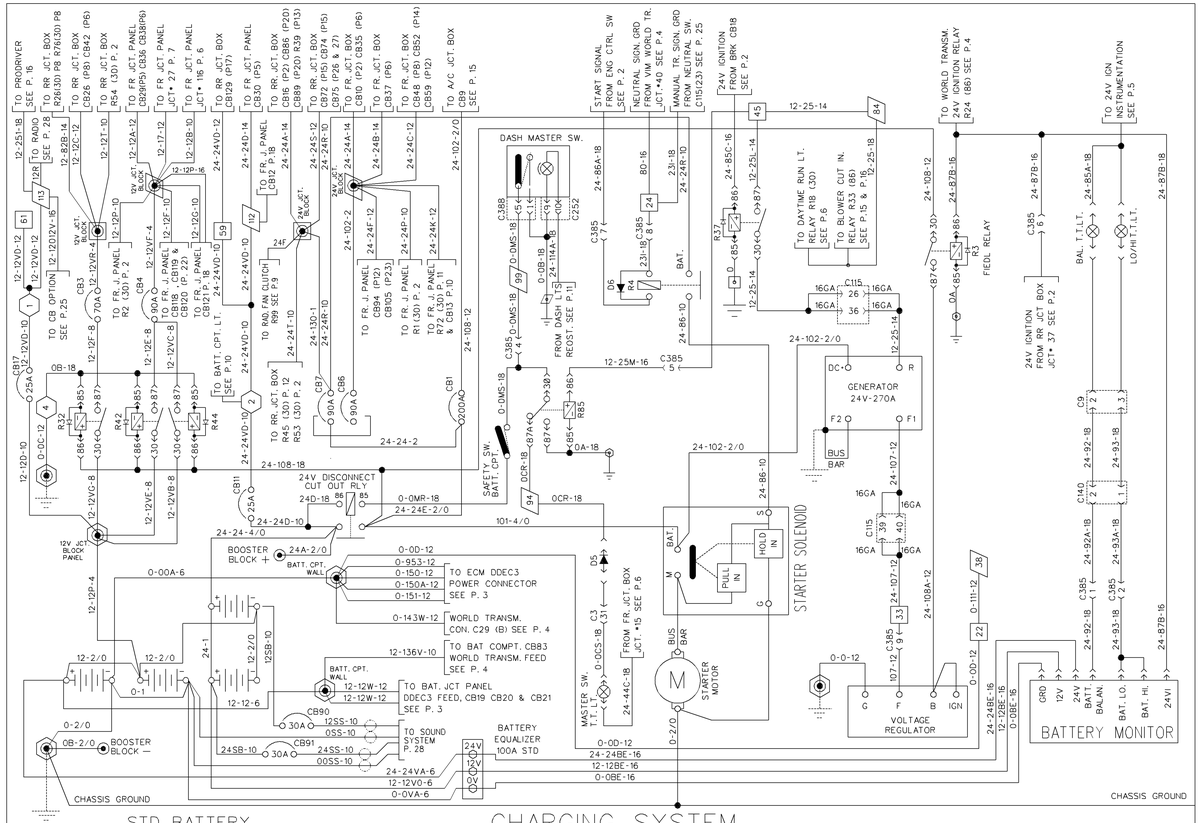

PREVOST CAR inc. | WIRING DIAGRAM | NO: D060872 | P. 1 1/2 | REVISION 022

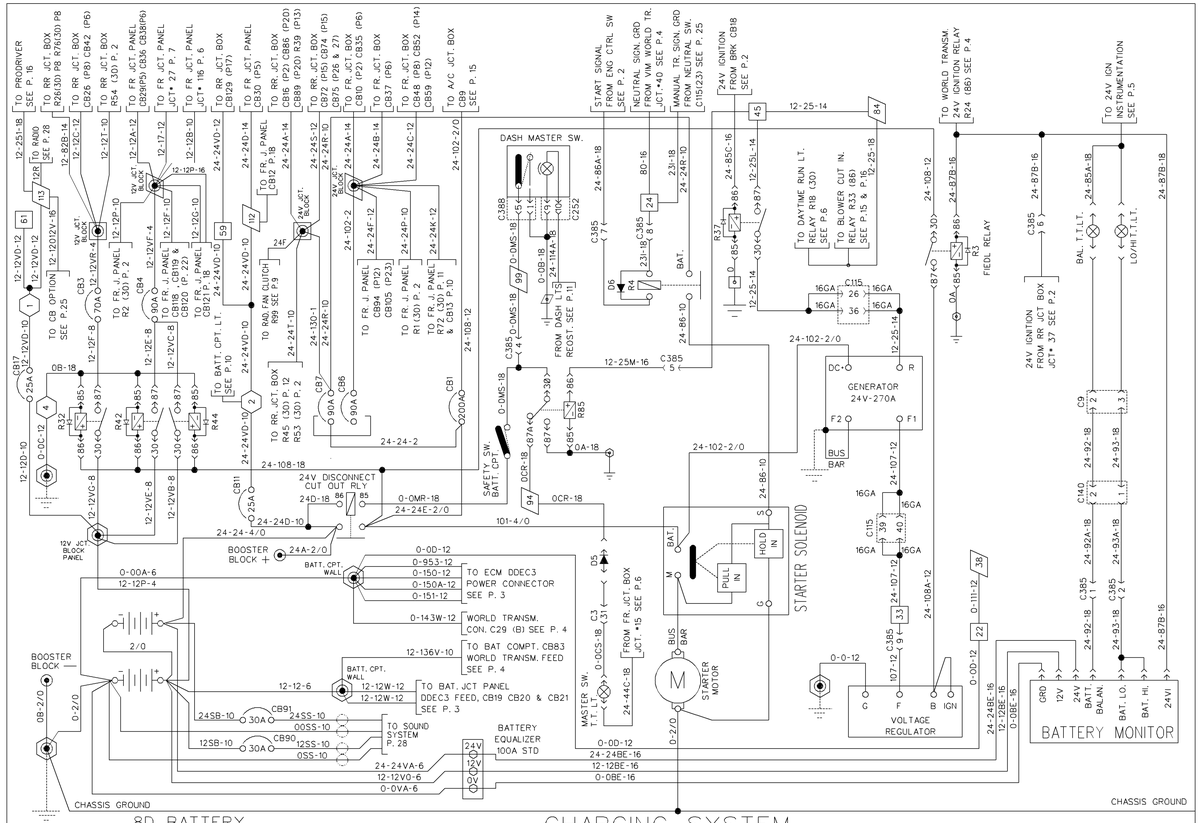

PREVOST CAR inc. | WIRING DIAGRAM | NO: D060872 | P. 1 2/2 | REVISION 022

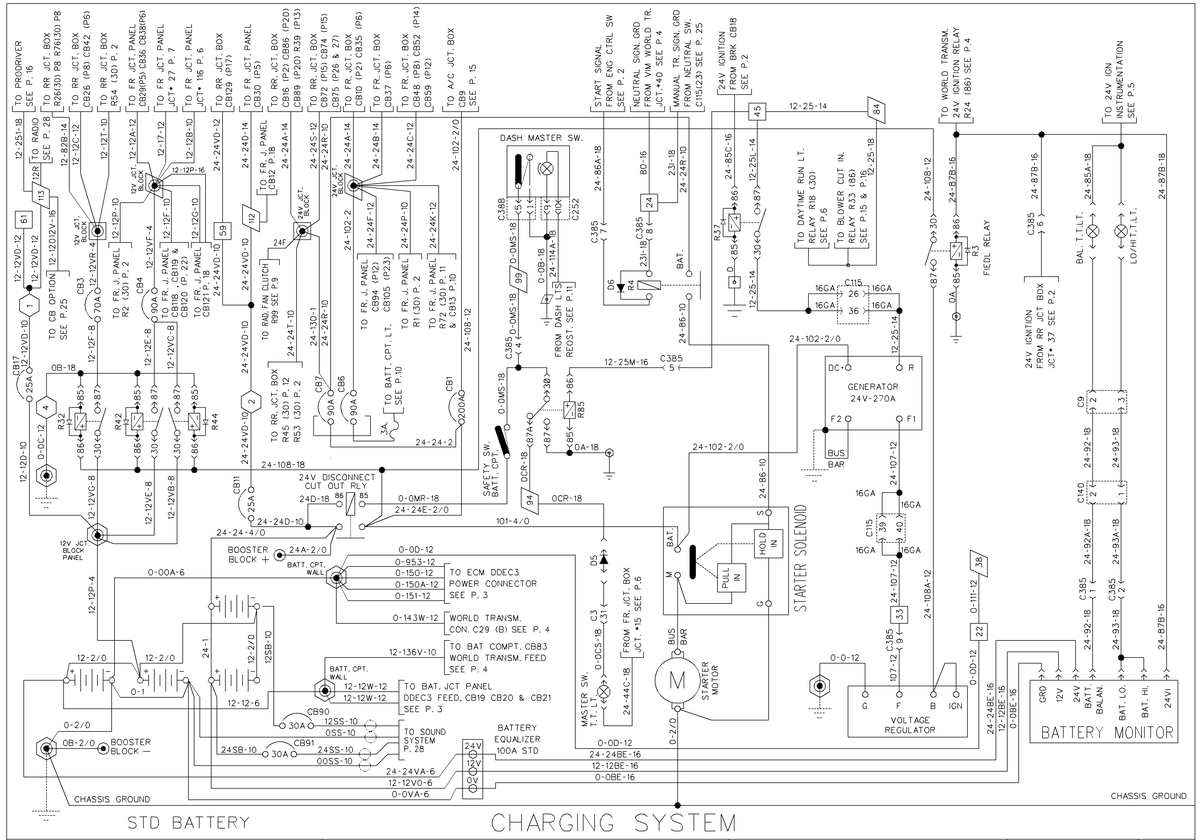
STD BATTERY
CHARGING SYSTEM
DASH MASTER SW.
GENERATOR 24V-270A
STARTER SOLENOID
STARTER MOTOR
VOLTAGE REGULATOR
BATTERY MONITOR
BATTERY EQUALIZER 100A STD
24V DISCONNECT CUT OUT RLY
SAFETY SW. BATT. CPT.
BOOSTER BLOCK
12V JCT BLOCK PANEL
CHASSIS GROUND
TO ECM DDEC3 POWER CONNECTOR SEE P. 3
WORLD TRANSM. CON. C29 (B) SEE P. 4
TO BAT COMPT. CB83 WORLD TRANSM. FEED SEE P. 4
TO BAT. JCT PANEL DDEC3 FEED, CB19 CB20 & CB21 SEE P. 3
TO SOUND SYSTEM P. 28
TO CB OPTION SEE P. 25
TO RADIO SEE P. 28
TO PRIORIVER SEE P. 16
TO A/C JCT. BOX CB9 SEE P. 15
START SIGNAL FROM ENG CTRL SW SEE P. 2
NEUTRAL SIGN. GRD FROM VIM WORLD TR. JCT.•40 SEE P. 4
MANUAL TR. SIGN. GRD FROM NEUTRAL SW. C115(23) SEE P. 25
24V IGNITION FROM BRK CB18 SEE P. 2
TO WORLD TRANSM. 24V IGNITION RELAY R24 (86) SEE P. 4
TO 24V IGN INSTRUMENTATION SEE P. 5
TO DAYTIME RUN L.T. RELAY R18 (30)
TO BLOWER CUT IN. RELAY R33 (85) SEE P. 15 & P. 18
24V IGNITION FROM RR CT BOX JCT• 37 SEE P. 2
FIEDL RELAY
FROM DASH L.T.S. REOST. SEE P. 11
TO BATT. CPT. LT. SEE P. 10
TO FR. J. PANEL R2 (30) P. 2
TO FR. J. PANEL R72 (30) P. 11
TO FR. J. PANEL CB12 P. 18
TO FR. J. PANEL CB13B , CB19 & CB120 (P. 22)
TO FR. J. PANEL CB84 (P12) CB105 (P23)
TO RR. JCT. BOX R45 (30) P. 12 R53 (30) P. 2
TO RAD FAN CLUTCH R89 SEE P. 9
FROM FR. JCT. BOX JCT. •15 SEE P. 5
MASTER SW. T.T. LT.
BAT. T.T.LT.
LO/HT.T.LT.
BAT. LO
BAT. HI.
BAT. BALAN.
GRD
12V
24V
24V

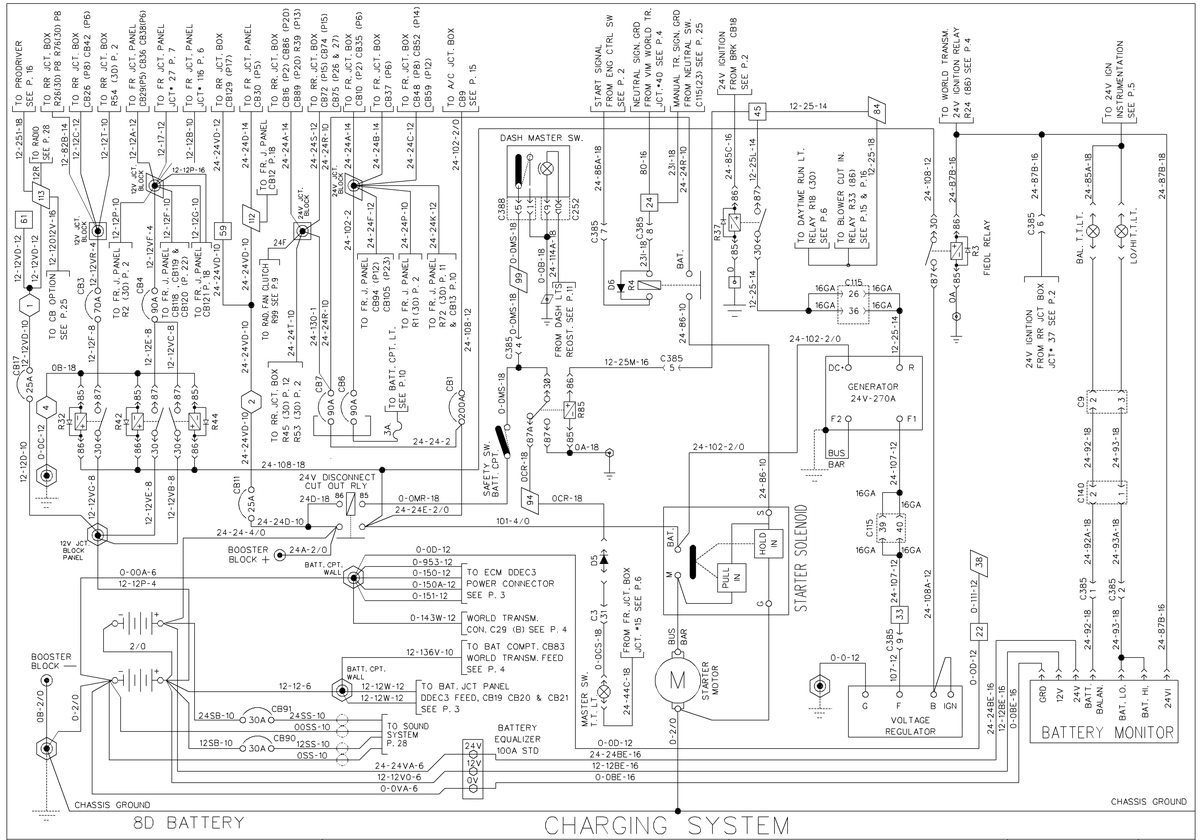
8D BATTERY
CHARGING SYSTEM
DASH MASTER SW.
GENERATOR 24V-270A
STARTER SOLENOID
STARTER MOTOR
VOLTAGE REGULATOR
BATTERY MONITOR
BATTERY EQUALIZER 100A STD
24V DISCONNECT CUT OUT RLY
SAFETY SW. BATT. CPT.
BOOSTER BLOCK
12V JCT BLOCK PANEL
CHASSIS GROUND
TO ECM DDEC3 POWER CONNECTOR SEE P. 3
WORLD TRANSM. CON. C29 (B) SEE P. 4
TO BAT COMPT. CB83 WORLD TRANSM. FEED SEE P. 4
TO BAT. JCT PANEL DDEC3 FEED, CB19 CB20 & CB21 SEE P. 3
TO SOUND SYSTEM P. 28
TO CB OPTION SEE P. 25
TO RADIO SEE P. 28
TO PRIORIVER SEE P. 16
TO A/C JCT. BOX CB9 SEE P. 15
START SIGNAL FROM ENG CTRL SW SEE P. 2
NEUTRAL SIGN. GRD FROM VIM WORLD TR. JCT.•40 SEE P. 4
MANUAL TR. SIGN. GRD FROM NEUTRAL SW. C115(23) SEE P. 25
24V IGNITION FROM BRK CB18 SEE P. 2
TO WORLD TRANSM. 24V IGNITION RELAY R24 (86) SEE P. 4
TO 24V IGN INSTRUMENTATION SEE P. 5
TO DAYTIME RUN L.T. RELAY R18 (30)
TO BLOWER CUT IN. RELAY R33 (85) SEE P. 15 & P. 18
24V IGNITION FROM RR CT BOX JCT• 37 SEE P. 2
FIEDL RELAY
FROM DASH L.T.S. REOST. SEE P. 11
TO BATT. CPT. LT. SEE P. 10
TO FR. J. PANEL R2 (30) P. 2
TO FR. J. PANEL R72 (30) P. 11
TO FR. J. PANEL CB12 P. 18
TO FR. J. PANEL CB13B , CB19 & CB120 (P. 22)
TO FR. J. PANEL CB84 (P12) CB105 (P23)
TO RR. JCT. BOX R45 (30) P. 12 R53 (30) P. 2
TO RAD FAN CLUTCH R89 SEE P. 9
FROM FR. JCT. BOX JCT. •15 SEE P. 5
MASTER SW. T.T. LT.
BAT. T.T.LT.
LO/HT.T.LT.
BAT. LO
BAT. HI.
BAT. BALAN.
GRD
12V
24V
24V

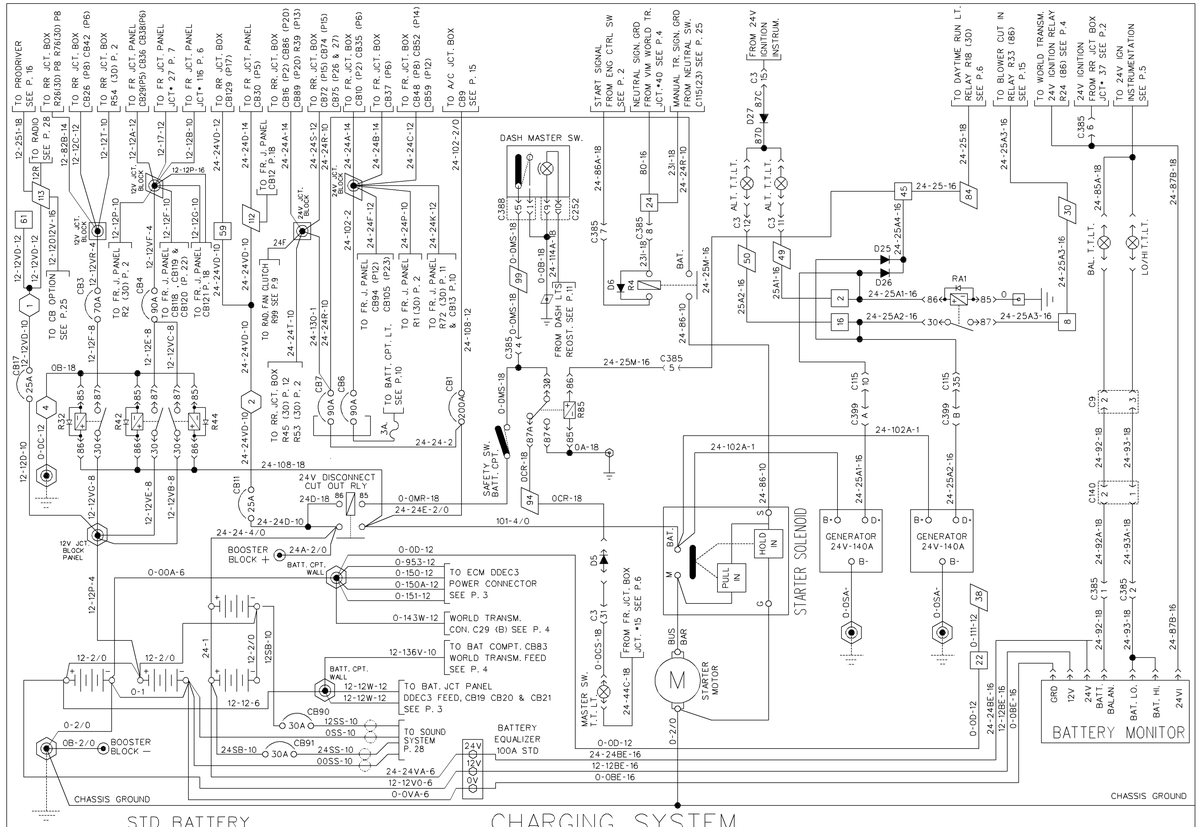

PREVOST CAR inc. | WIRING DIAGRAM | NO: D060872 | P. 1 1/2 | REVISION 035

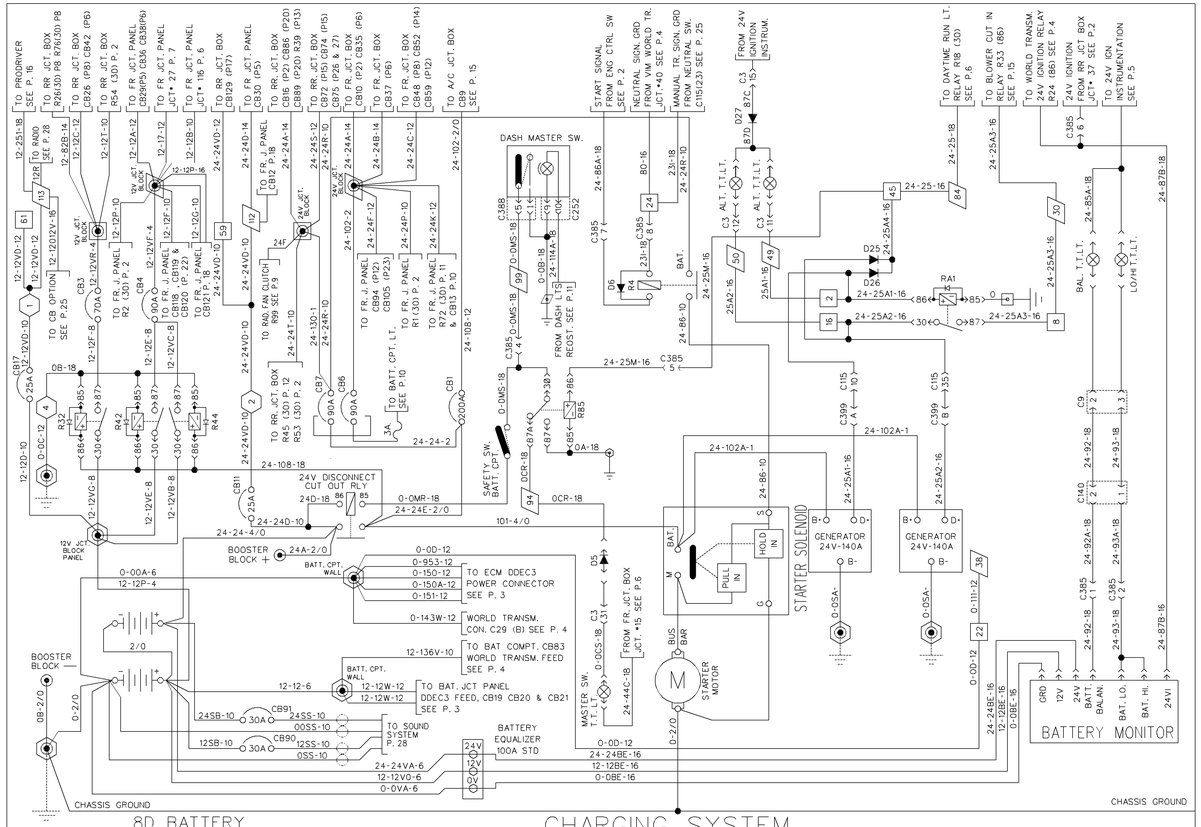

PREVOST CAR inc. | WIRING DIAGRAM | NO: D060872 | P. 1 2/2 | REVISION 035

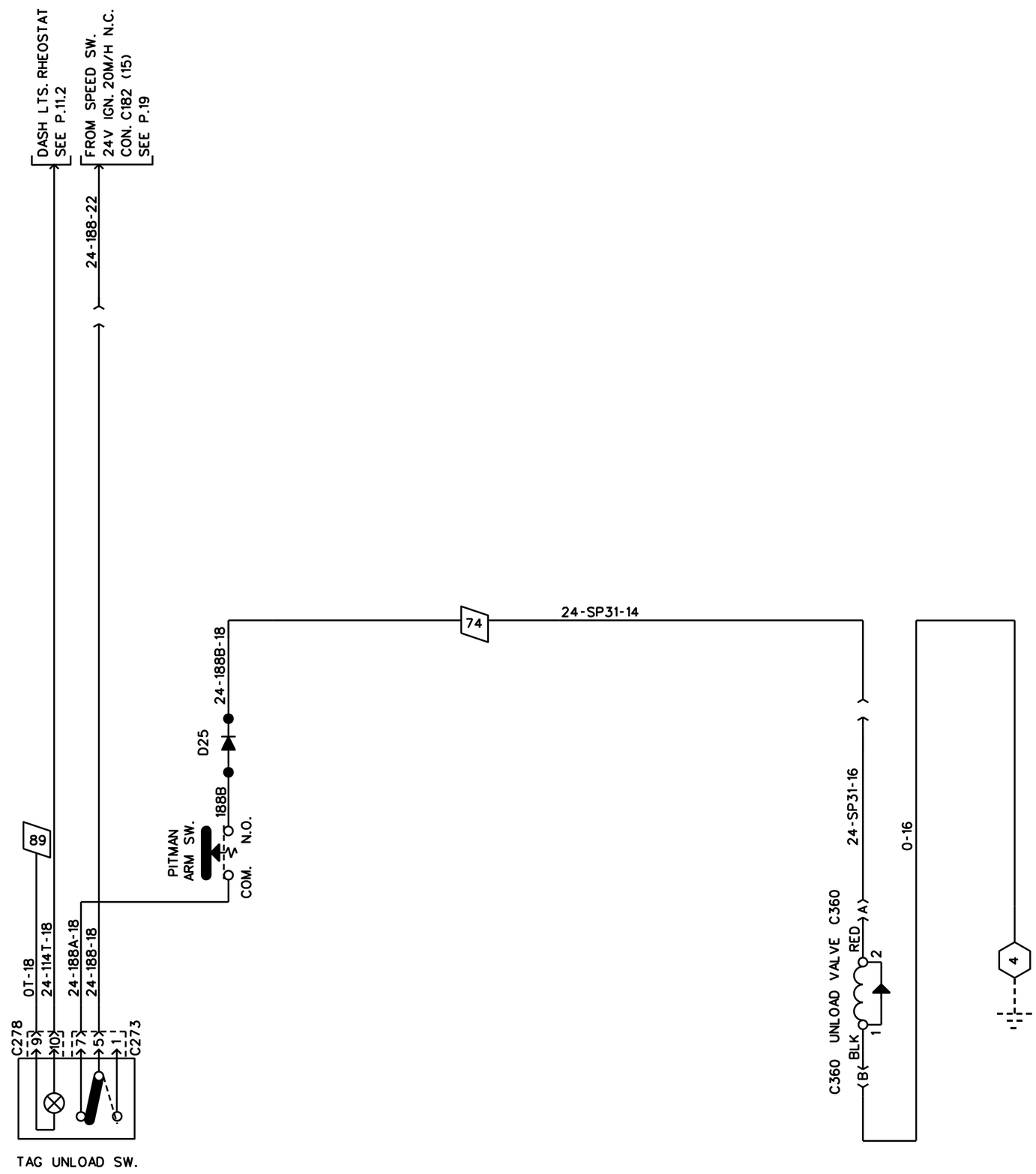

UNLOAD TAG SYSTEM

PREVOST	WIRING DIAGRAM	NO: D060872	PAGE: 1SP1	REVISION 00

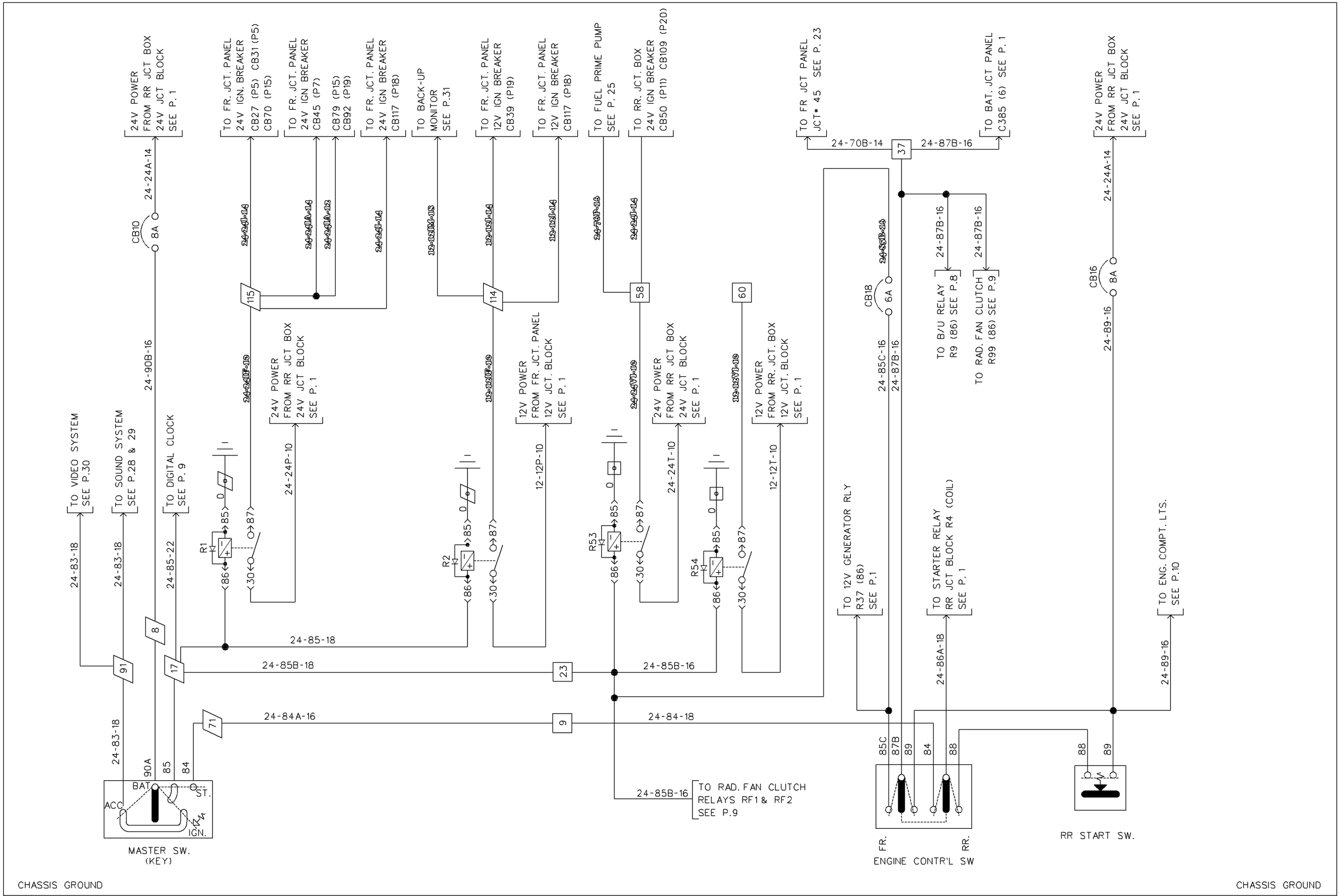

ENGINE CONTROL

PREVOST CAR inc.	WIRING DIAGRAM	NO: D060872	P. 2	REVISION 007

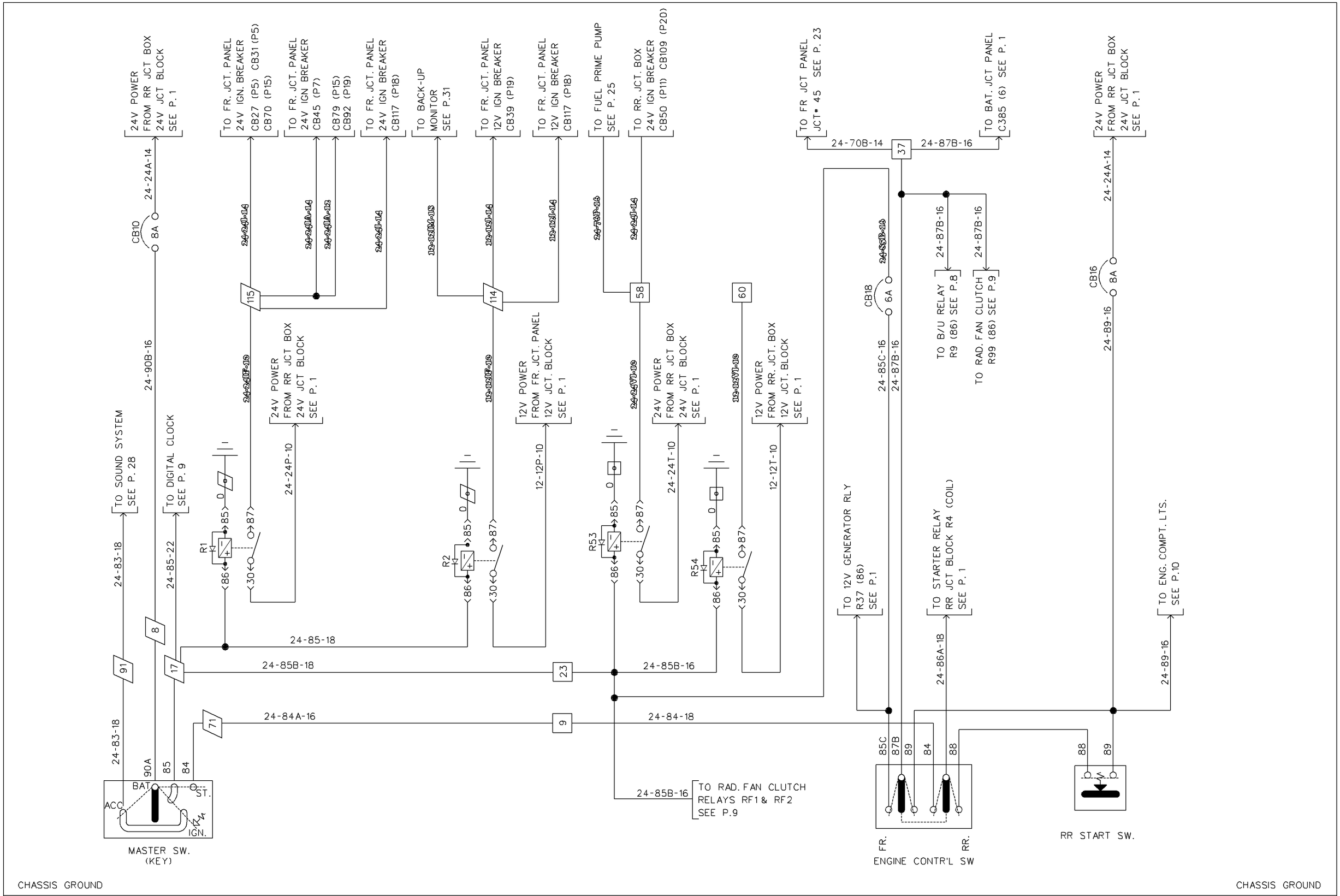

ENGINE CONTROL

PREVOST CAR inc.	WIRING DIAGRAM	NO: D060872	P. 2	REVISION 010

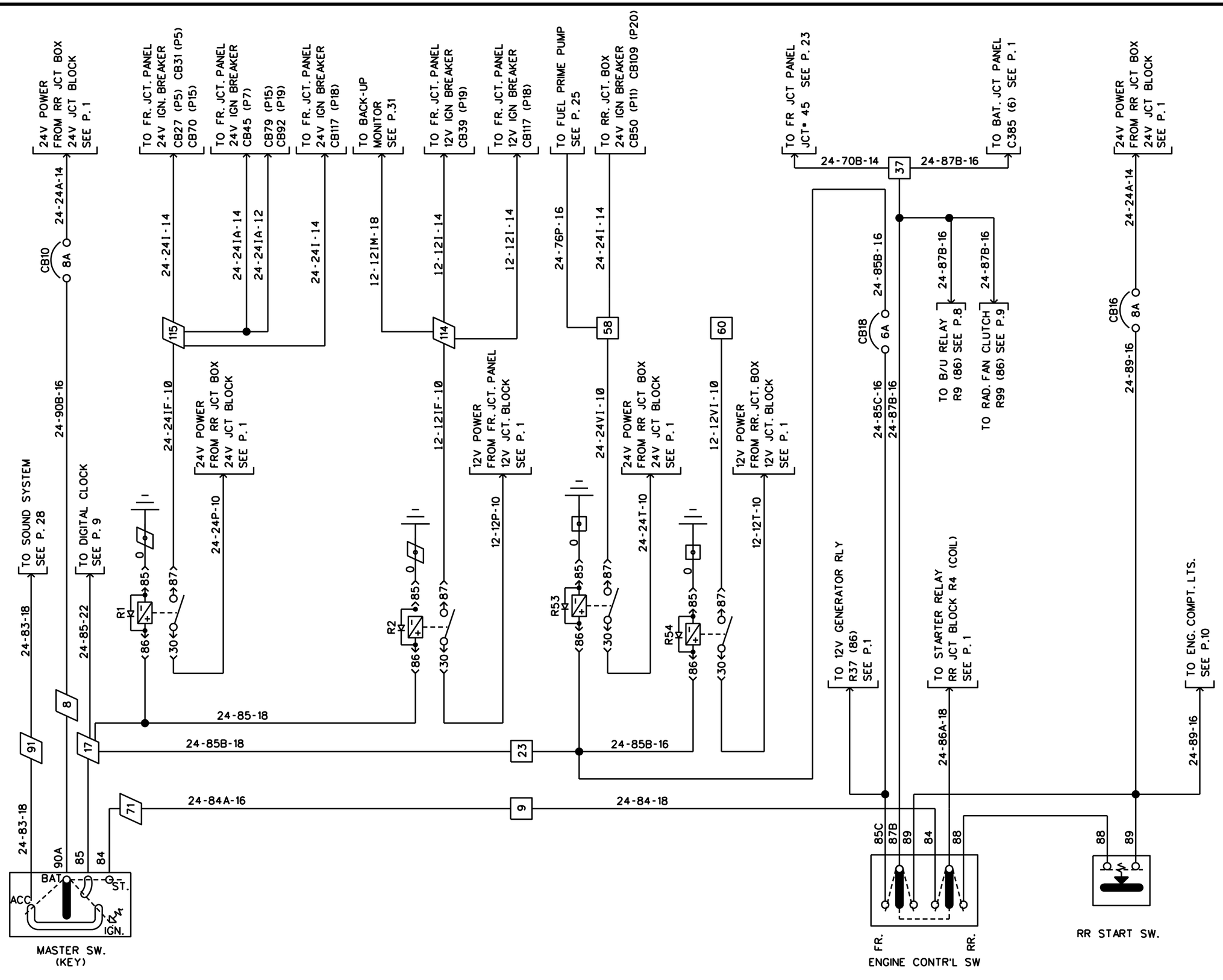

ENGINE CONTROL

PREVOST CAR inc.	WIRING DIAGRAM	NO: D060872	P. 2	REVISION 029

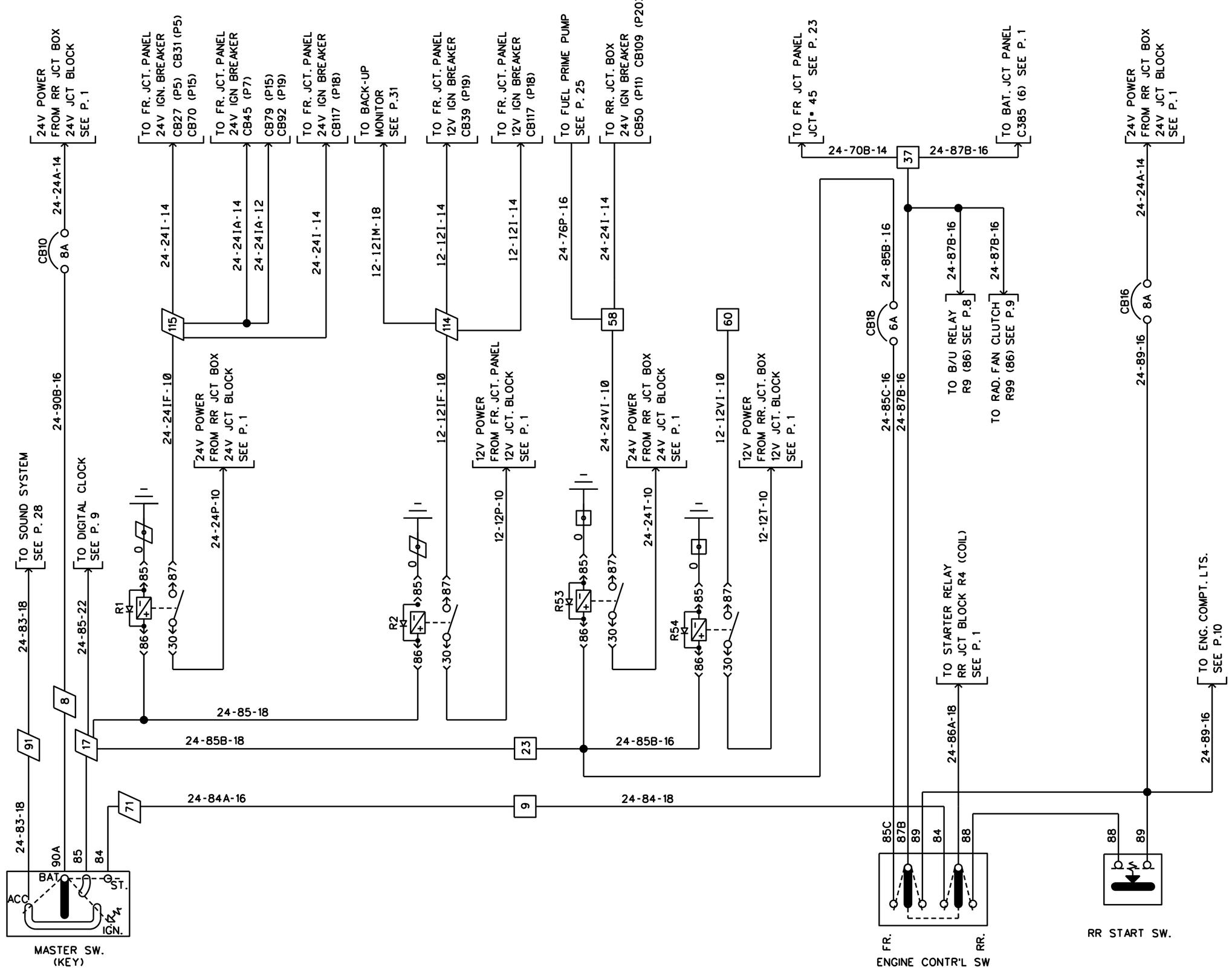

ENGINE CONTROL

PREVOST CAR inc.	WIRING DIAGRAM	NO: D060872	P. 2	REVISION 035

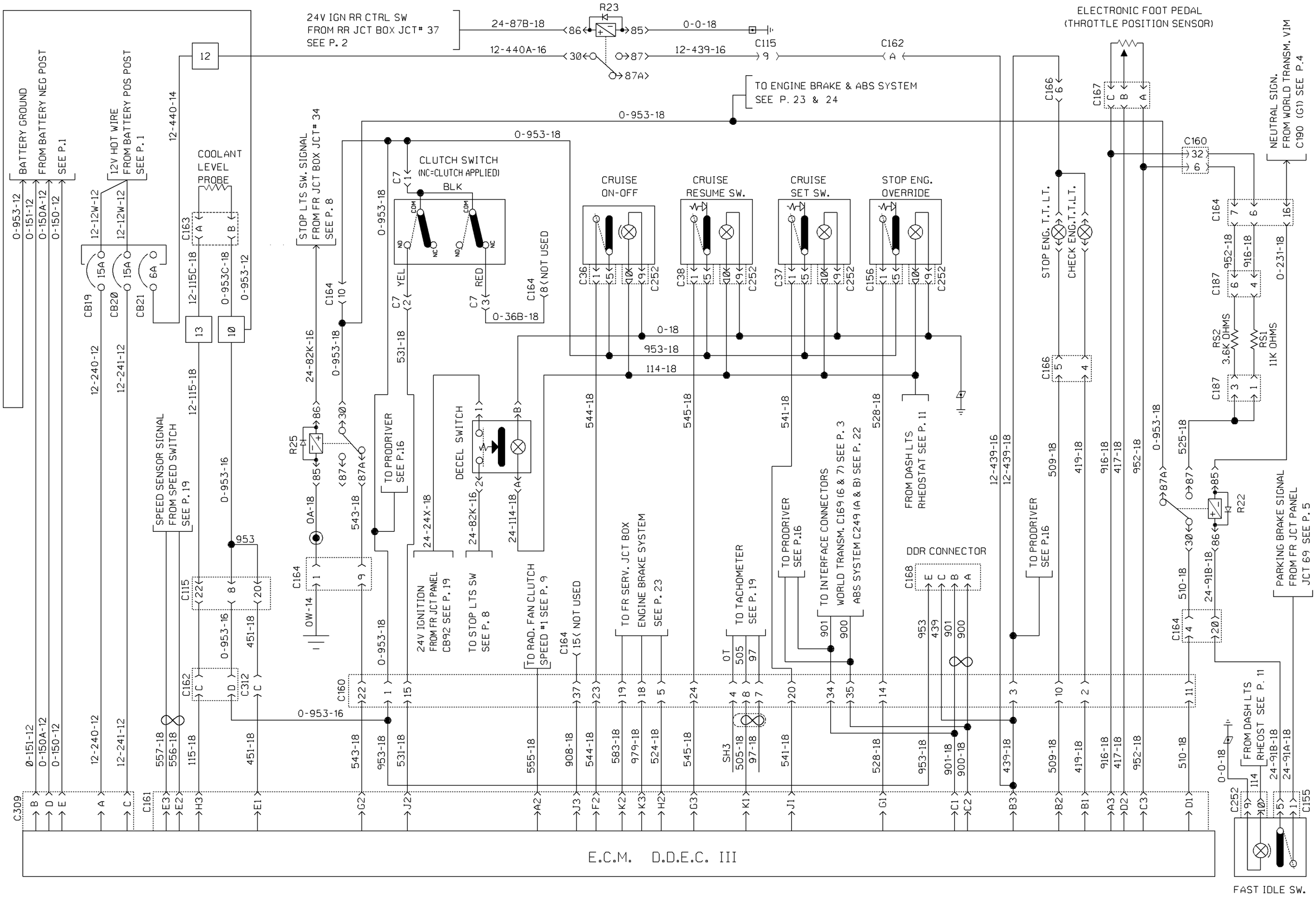

D.D.E.C. III

PREVOST CAR inc.	WIRING DIAGRAM	NO: D060872	P. 3	REVISION 007

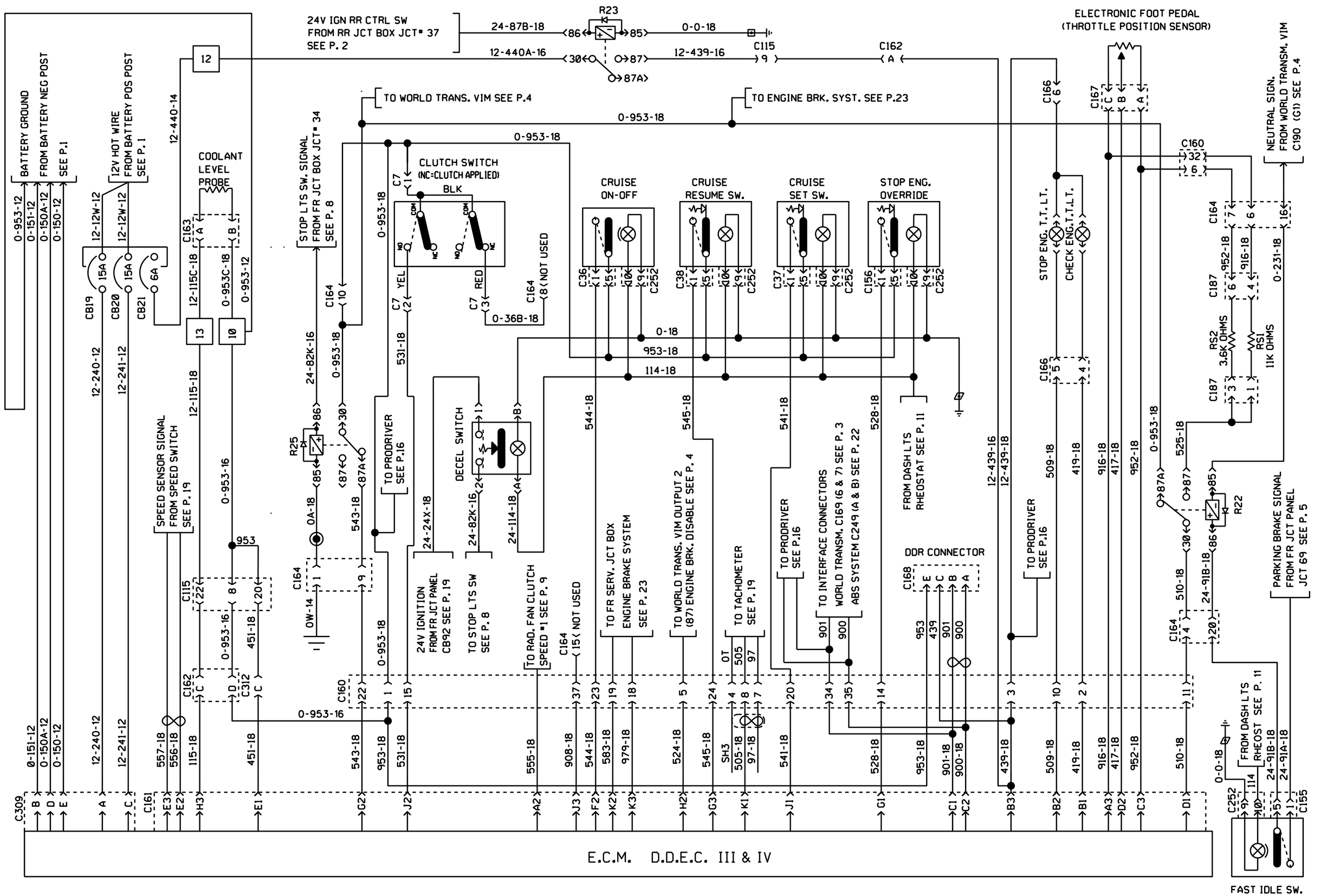
24V IGN RR CTRL SW
FROM RR JCT BOX JCT# 37
SEE P. 2
R23
24-87B-18
0-0-18
12-440A-16
12-439-16
C115
C162
ELECTRONIC FOOT PEDAL
(THROTTLE POSITION SENSOR)
BATTERY GROUND
FROM BATTERY NEG POST
SEE P.1
12V HOT WIRE
FROM BATTERY POS POST
SEE P. 1
COOLANT
LEVEL
PROBE
TO WORLD TRANS. VIM SEE P.4
TO ENGINE BRK. SYST. SEE P.23
0-953-18
STOP LTS SW. SIGNAL
FROM FR JCT BOX JCT# 34
SEE P. 8
CLUTCH SWITCH
(NC=CLUTCH APPLIED)
BLK
CRUISE
ON-OFF
CRUISE
RESUME SW.
CRUISE
SET SW.
STOP ENG.
OVERRIDE
STOP ENG. T.T.L.T.
CHECK ENG.T.L.T.
NEUTRAL SIGN.
FROM WORLD TRANSM. VIM
C190 (G1) SEE P.4
0-36B-18
(NOT USED)
0-18
953-18
114-18
SPEED SENSOR SIGNAL
FROM SPEED SWITCH
SEE P. 19
TO PRODRIVER
SEE P.16
DECEL SWITCH
24-82K-16
24-114-18
24-24X-18
24V IGNITION
FROM FR JCT PANEL
CB92 SEE P. 19
TO STOP LTS SW
SEE P. 8
TO RAD. FAN CLUTCH
SPEED #1 SEE P. 9
TO FR SERV. JCT BOX
ENGINE BRAKE SYSTEM
SEE P. 23
TO WORLD TRANS. VIM OUTPUT 2
(87) ENGINE BRK. DISABLE SEE P. 4
TO TACHOMETER
SEE P. 19
TO INTERFACE CONNECTORS
WORLD TRANSM. C169 (6 & 7) SEE P. 3
ABS SYSTEM C249 (A & B) SEE P. 22
FROM DASH LTS
RHEOSTAT SEE P. 11
DDR CONNECTOR
PARKING BRAKE SIGNAL
FROM FR JCT PANEL
JCT 69 SEE P. 5
FROM DASH LTS
RHEOST SEE P. 11
RS2
3.6K OHMS
RS1
11K OHMS
R22
R25
E.C.M. D.D.E.C. III & IV
FAST IDLE SW.

D.D.E.C. III & IV

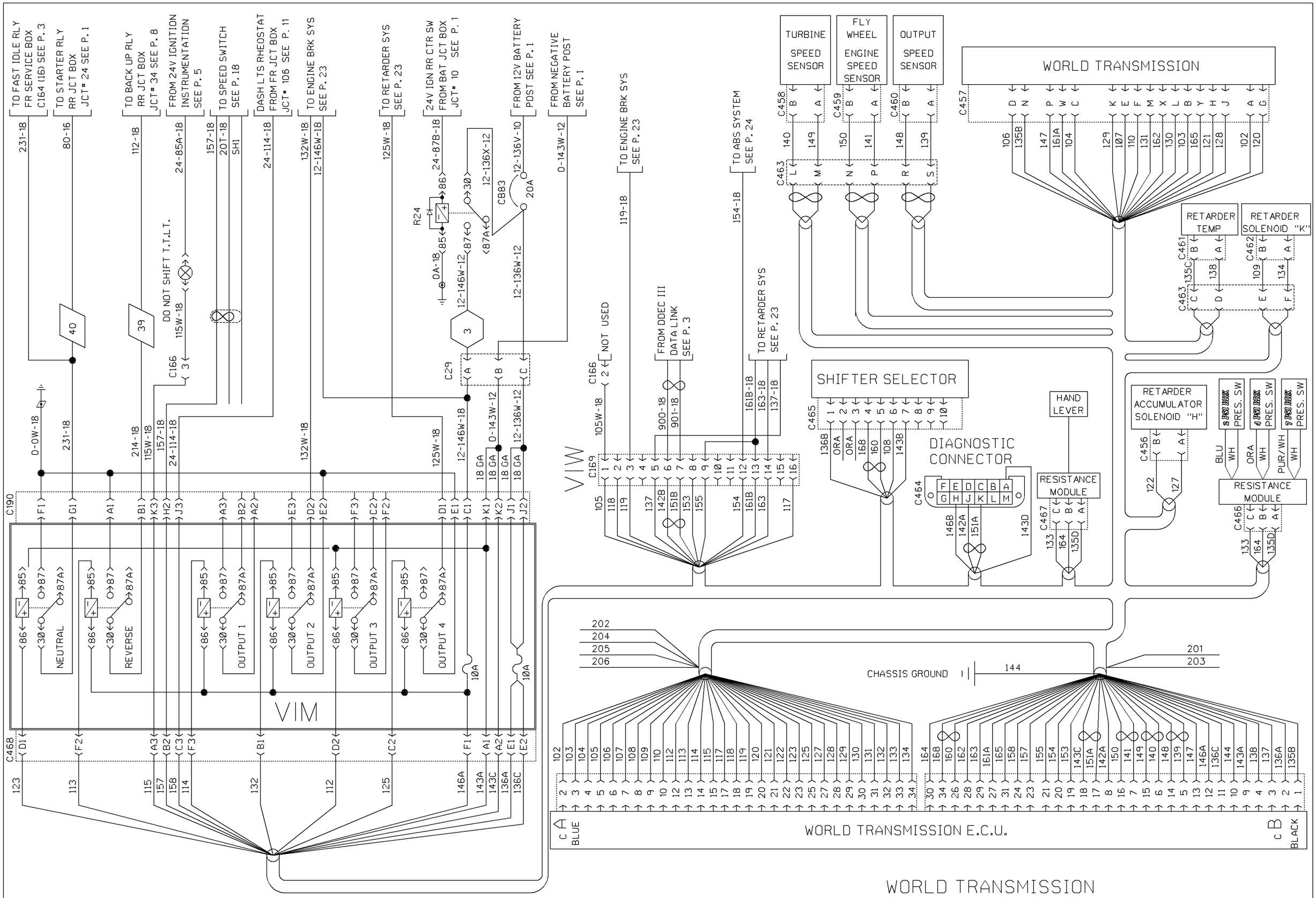

PREVOST CAR inc.	WIRING DIAGRAM	NO: D060872	P. 4	REVISION 008

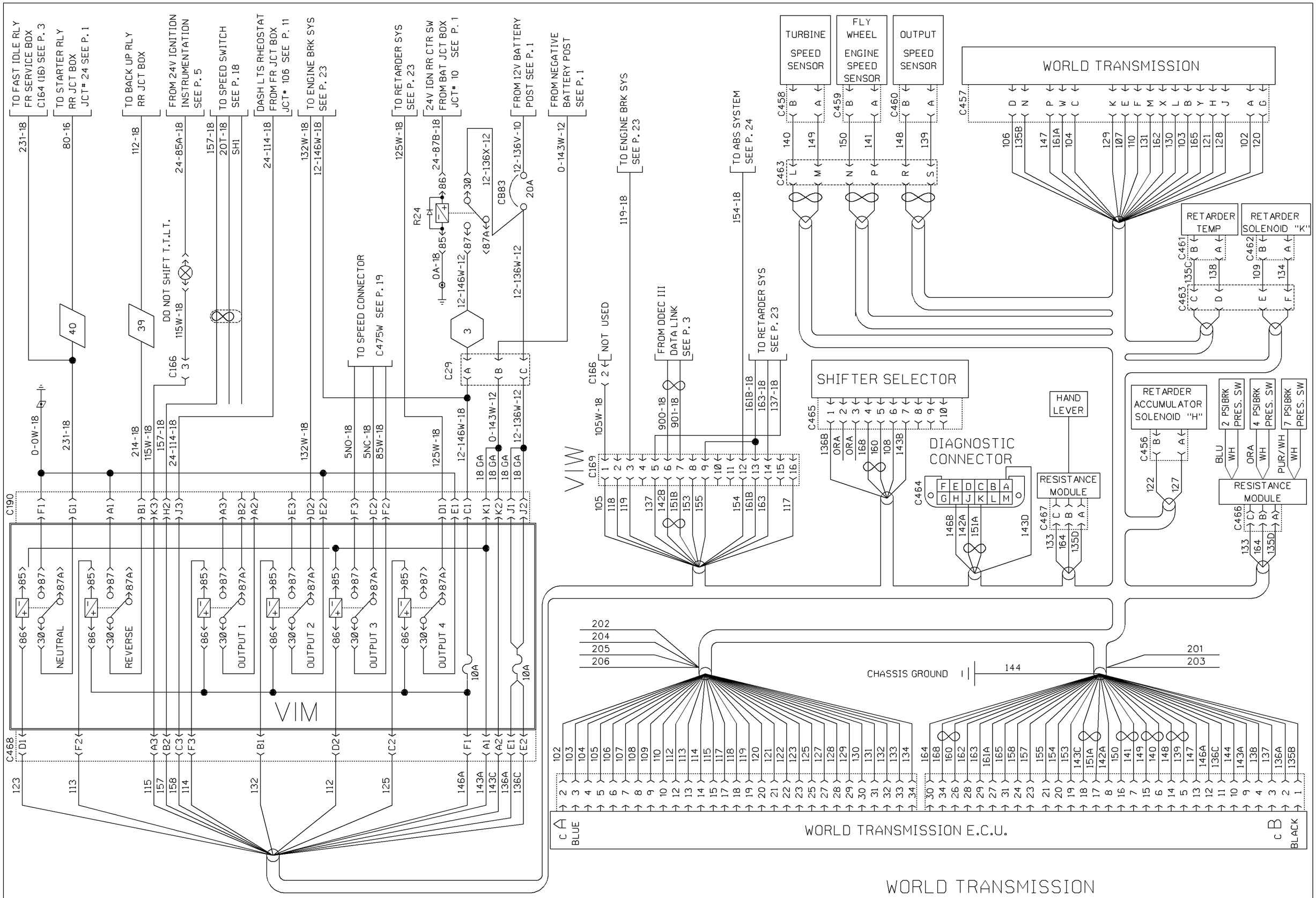

PREVOST CAR inc.	WIRING DIAGRAM	NO: D060872	P. 4	REVISION 013

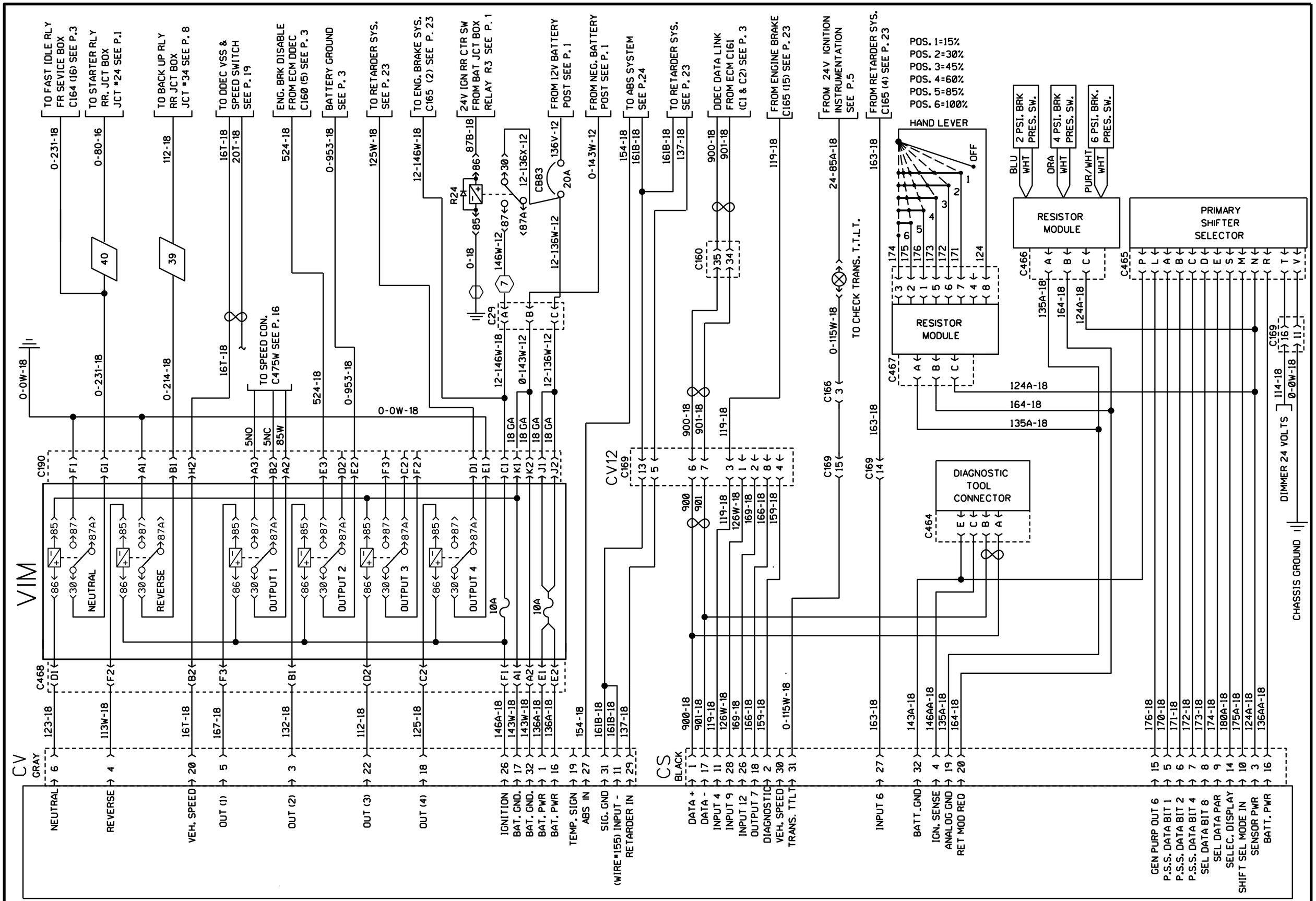

WORLD TRANSMISSION E.C.U.

PREVOST	WIRING DIAGRAM	NO: D060872	PAGE: 4	REVISION 023

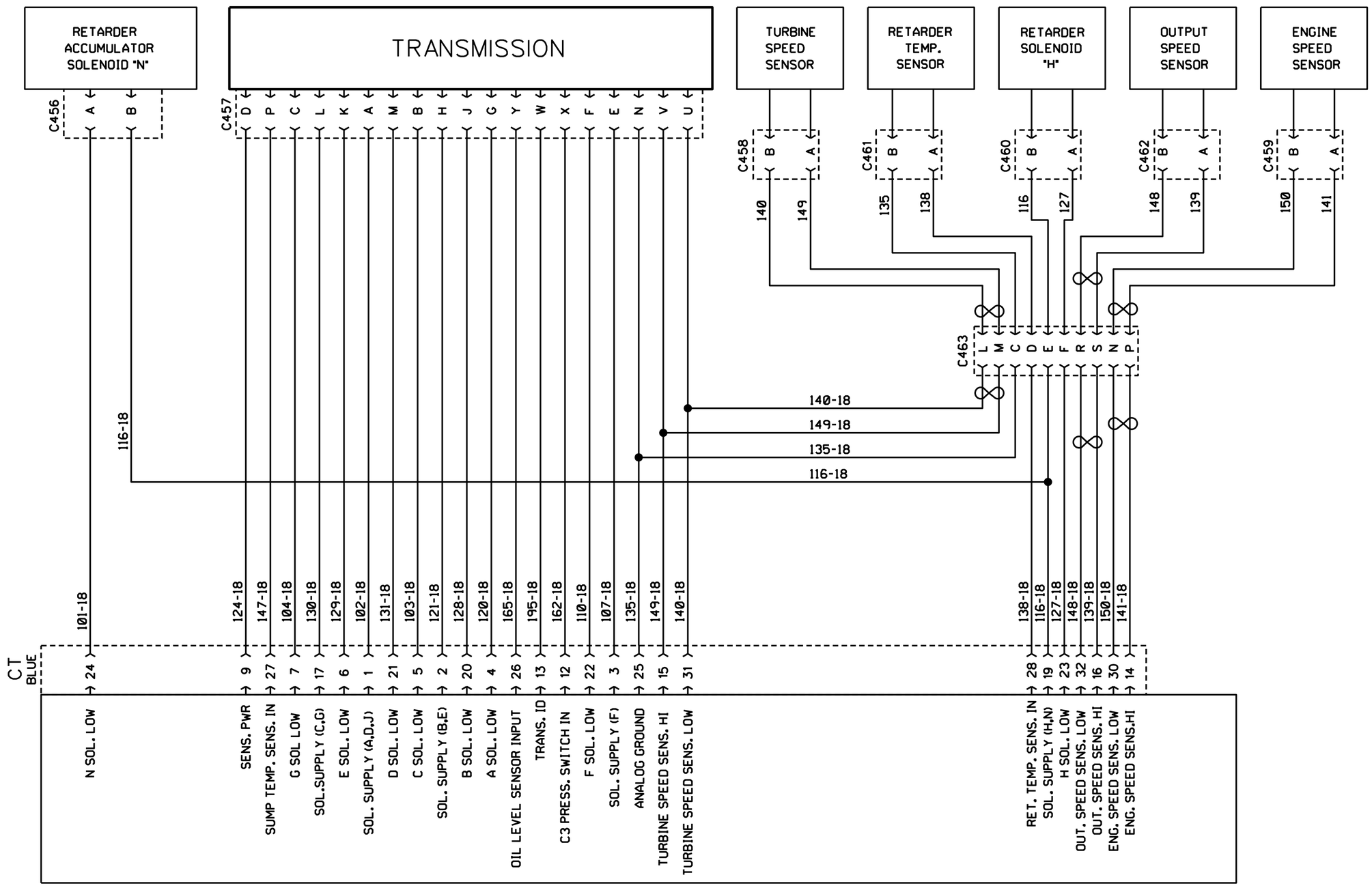

WORLD TRANSMISSION E.C.U. (SUITE)

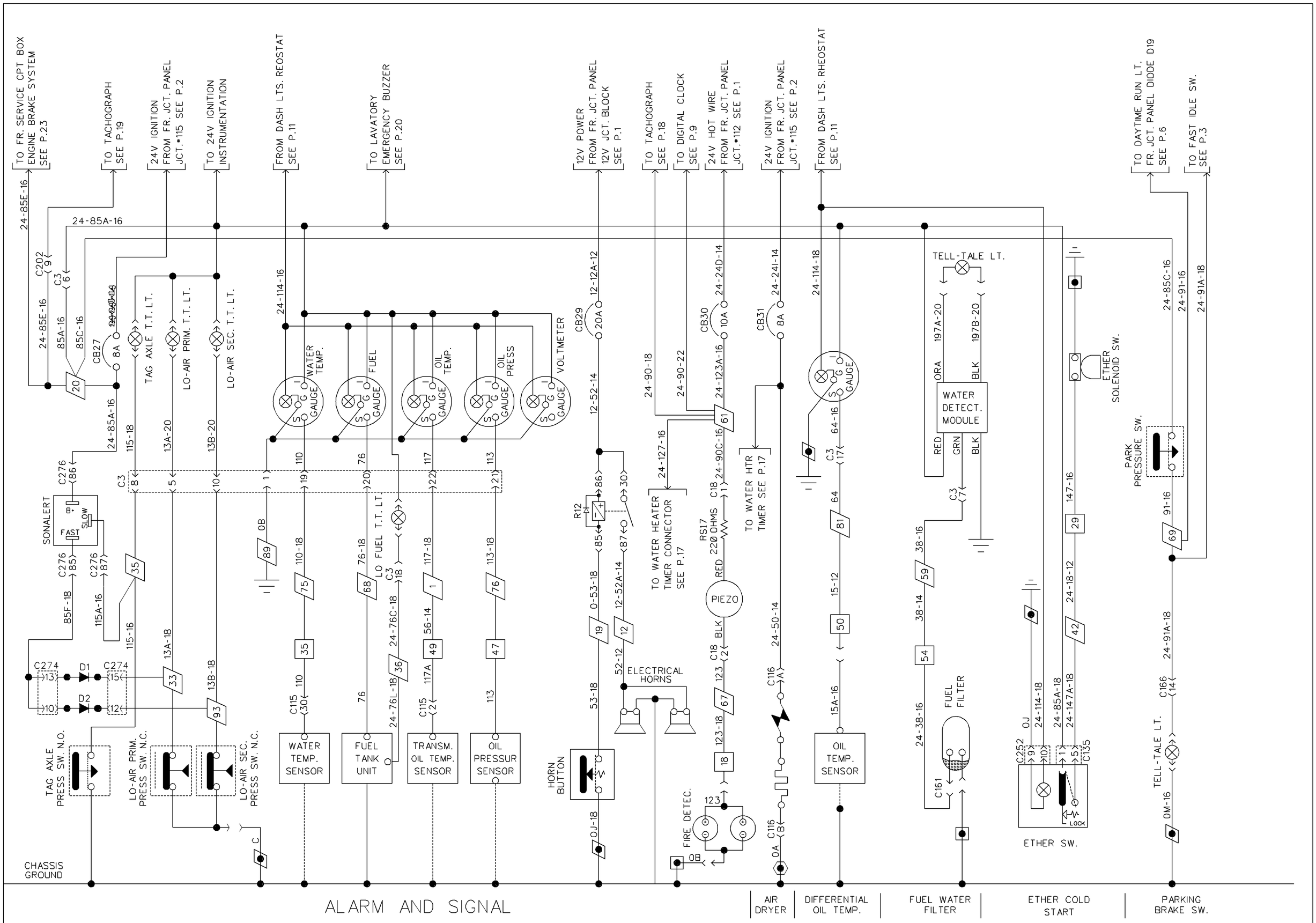

PREVOST CAR inc. | WIRING DIAGRAM | NO: D060872 | P. 5 | REVISION 007

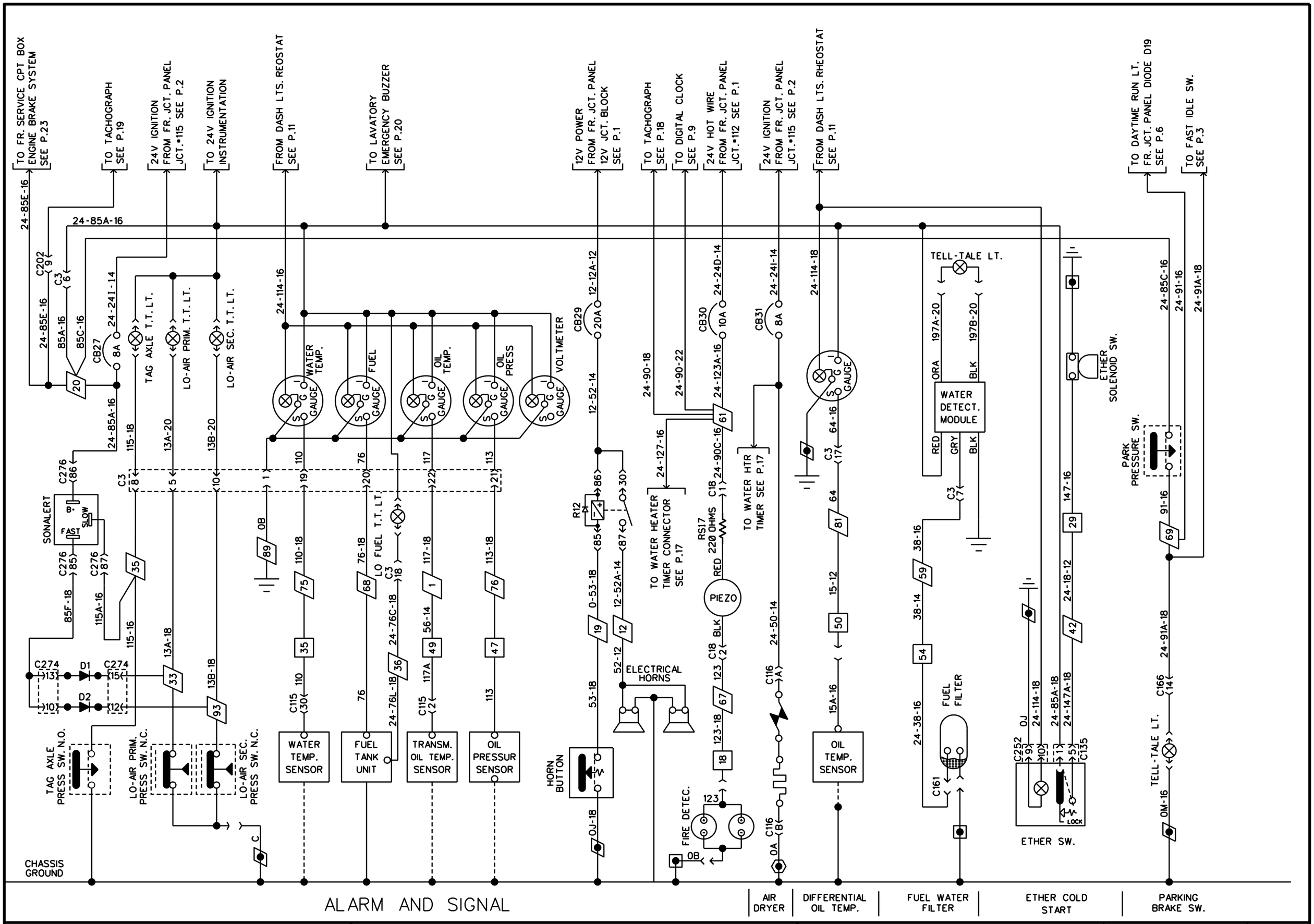

PREVOST CAR inc.	WIRING DIAGRAM	NO: D060872	P. 5	REVISION 029

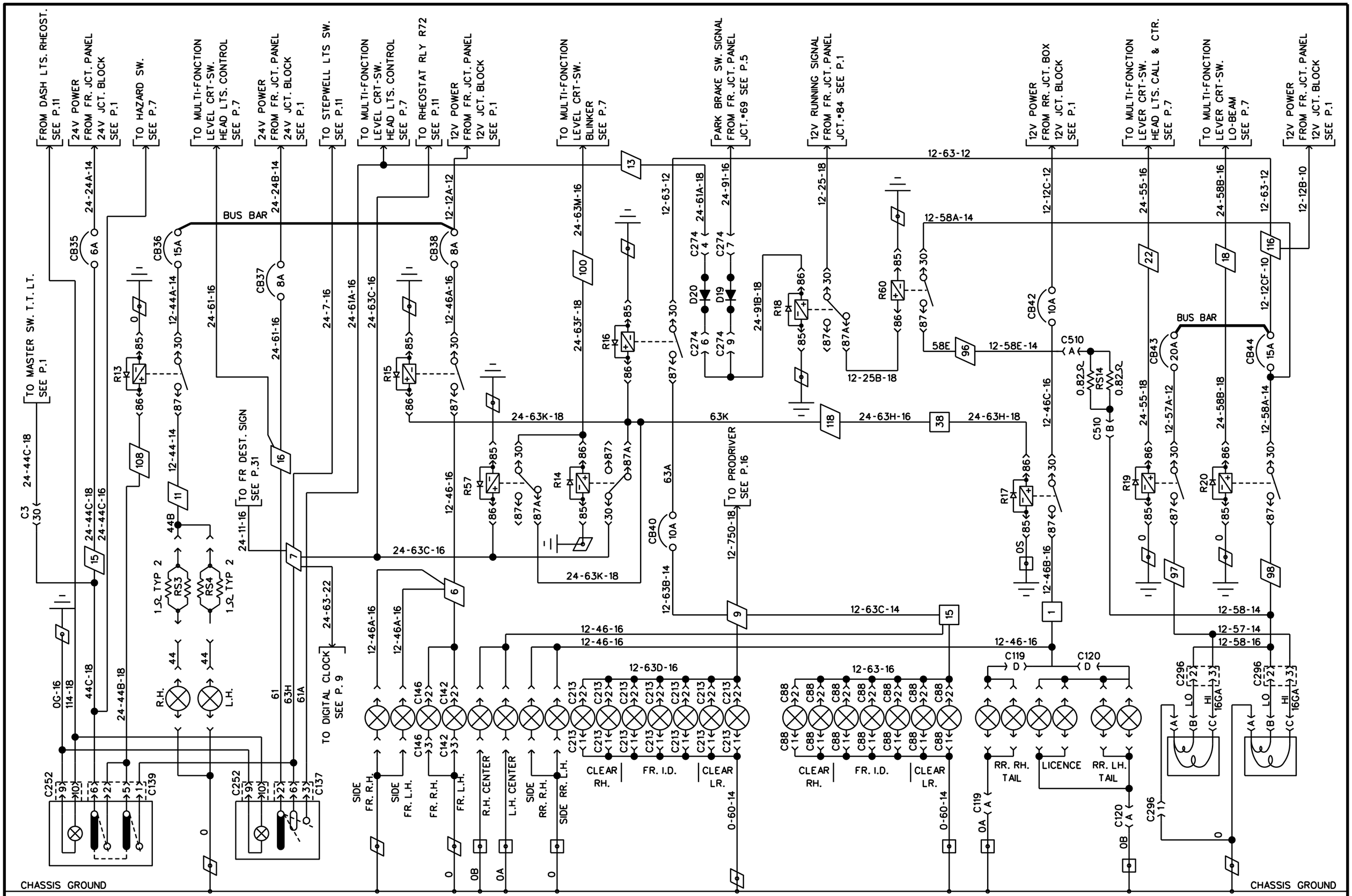

EXTERIOR LIGHTING

PREVOST CAR inc.	WIRING DIAGRAM	NO: D060872	P. 6	REVISION 015

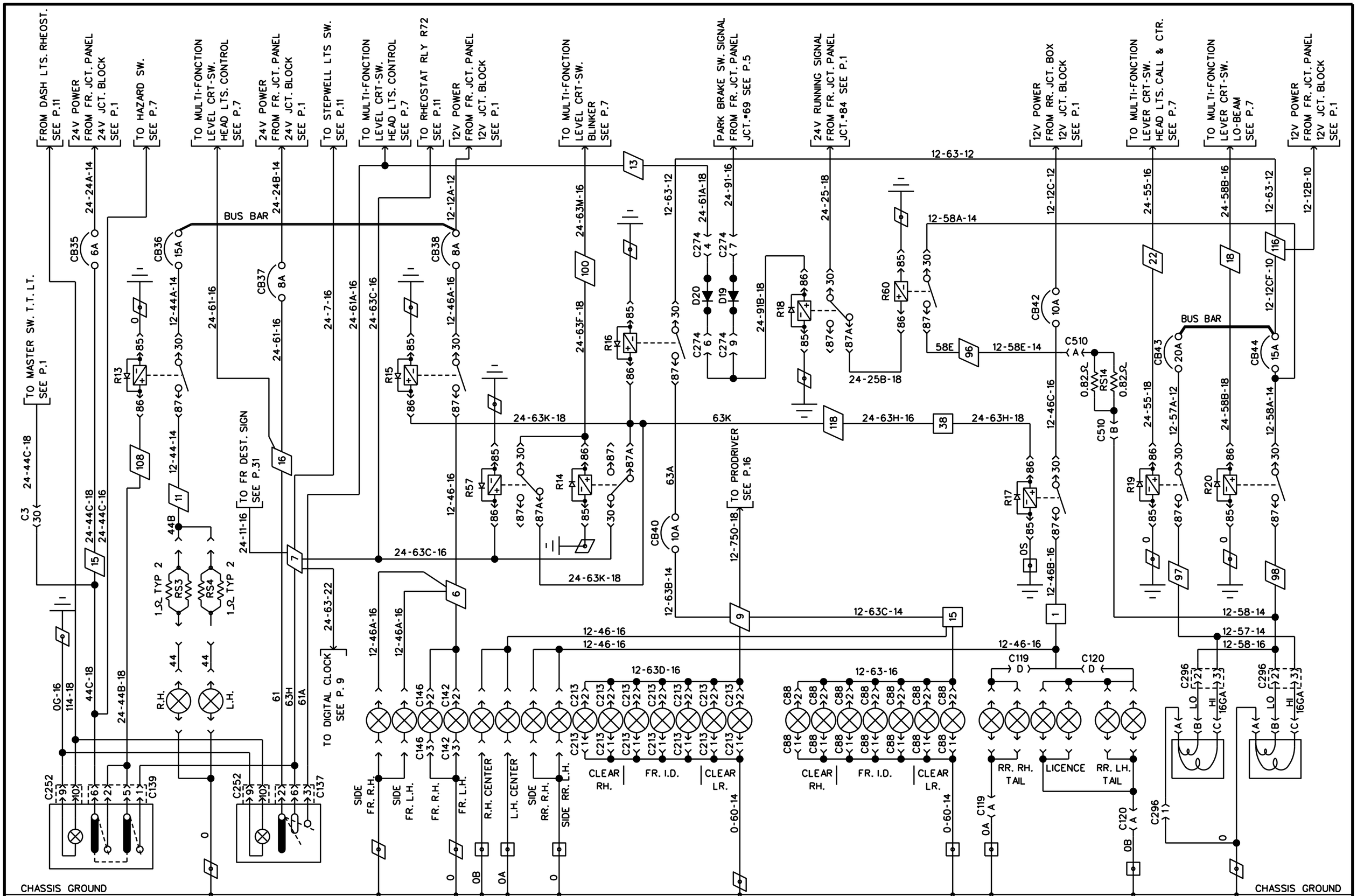

EXTERIOR LIGHTING

PREVOST CAR inc.	WIRING DIAGRAM	NO: D060872	P. 6	REVISION 035

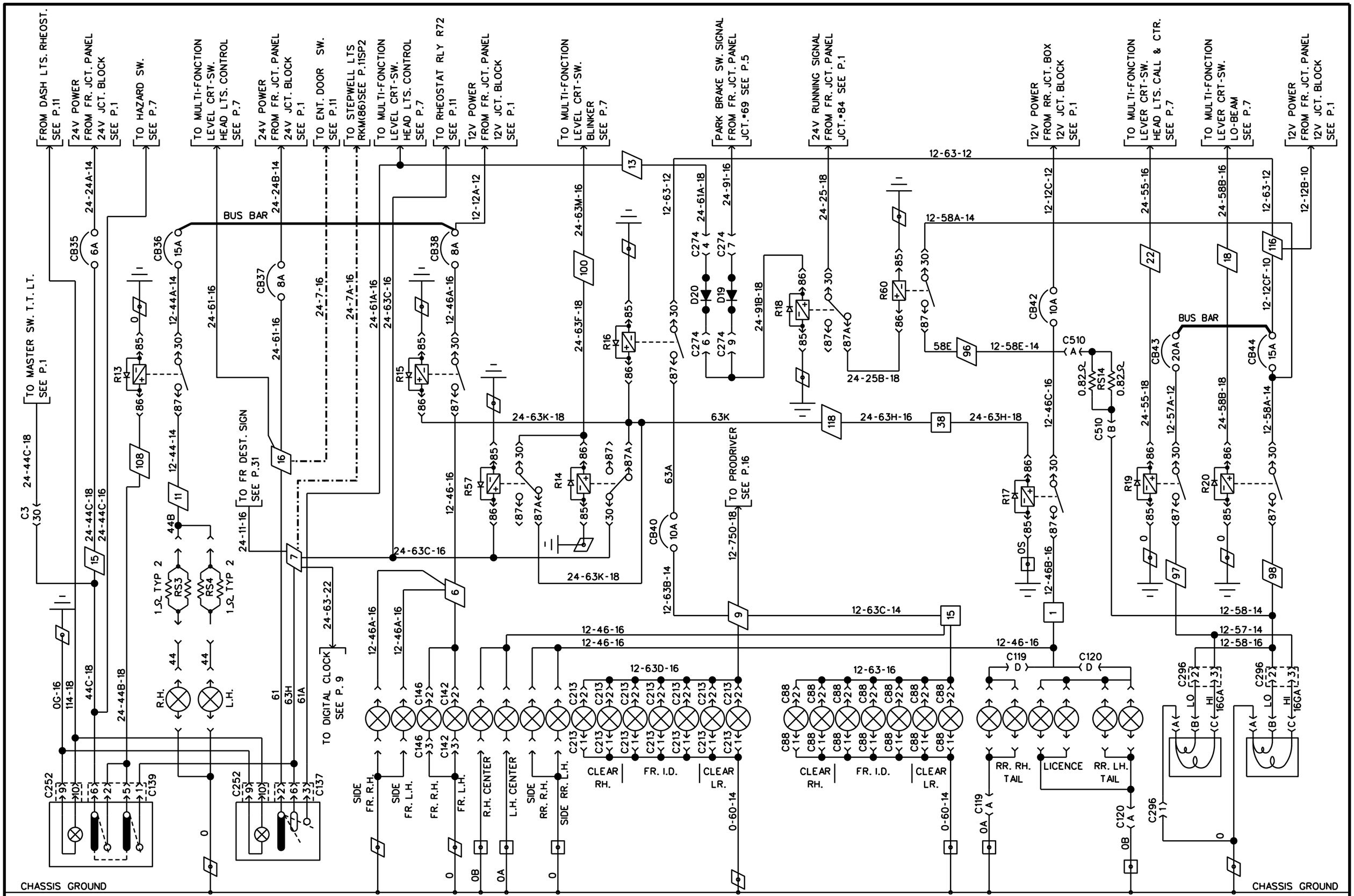

EXTERIOR LIGHTING

PREVOST CAR inc.	WIRING DIAGRAM	NO: D060872	P. 6sp1	REVISION 00

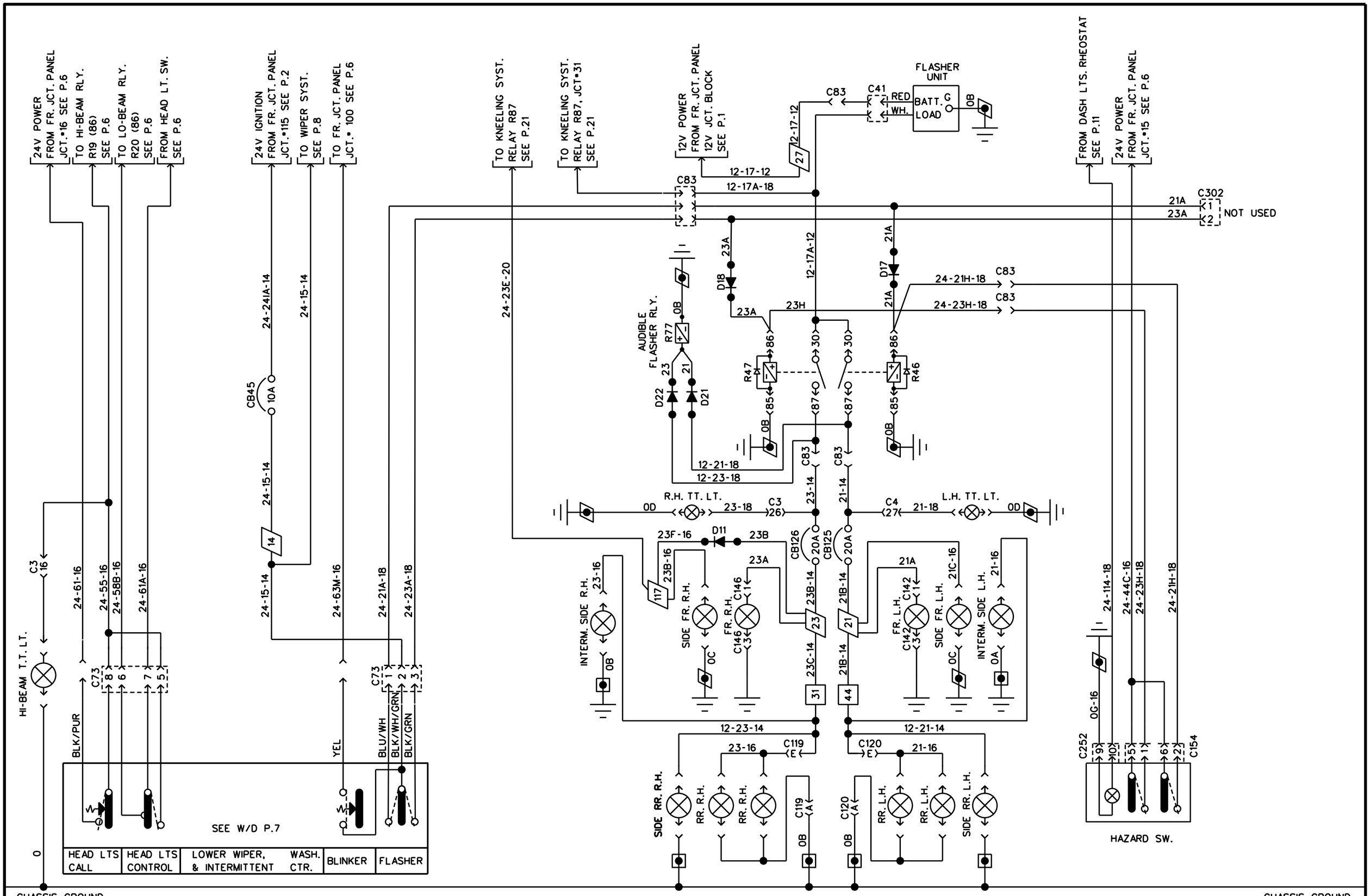

MULTI-FUNCTION LEVEL CTR. SW.

DIRECTIONNAL AND HAZARD LTS.

EXTERIOR LIGHTING

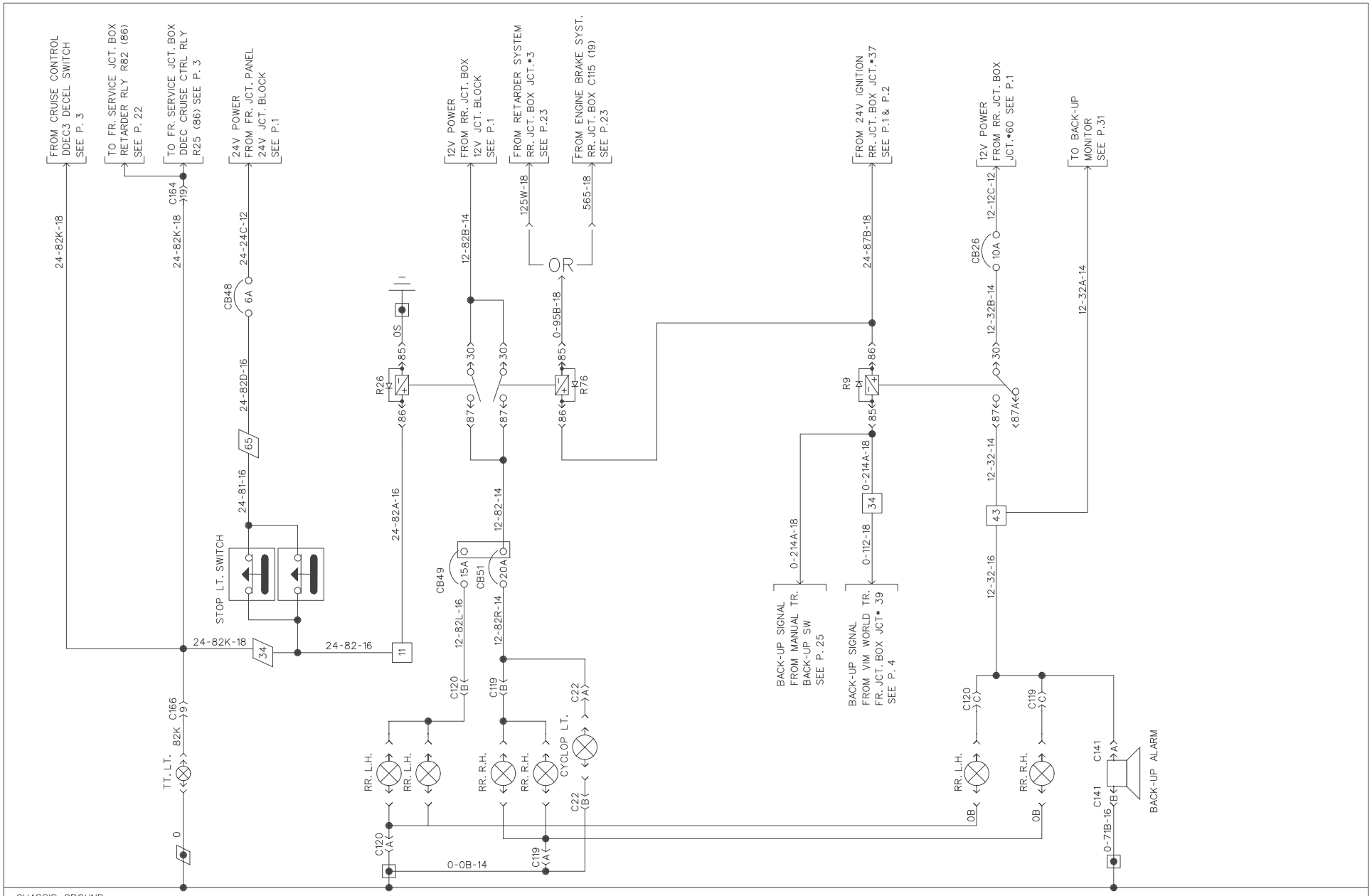

EXTERIOR LIGHTING

PREVOST CAR inc.	WIRING DIAGRAM	NO: D060872	P. 8	REVISION 000

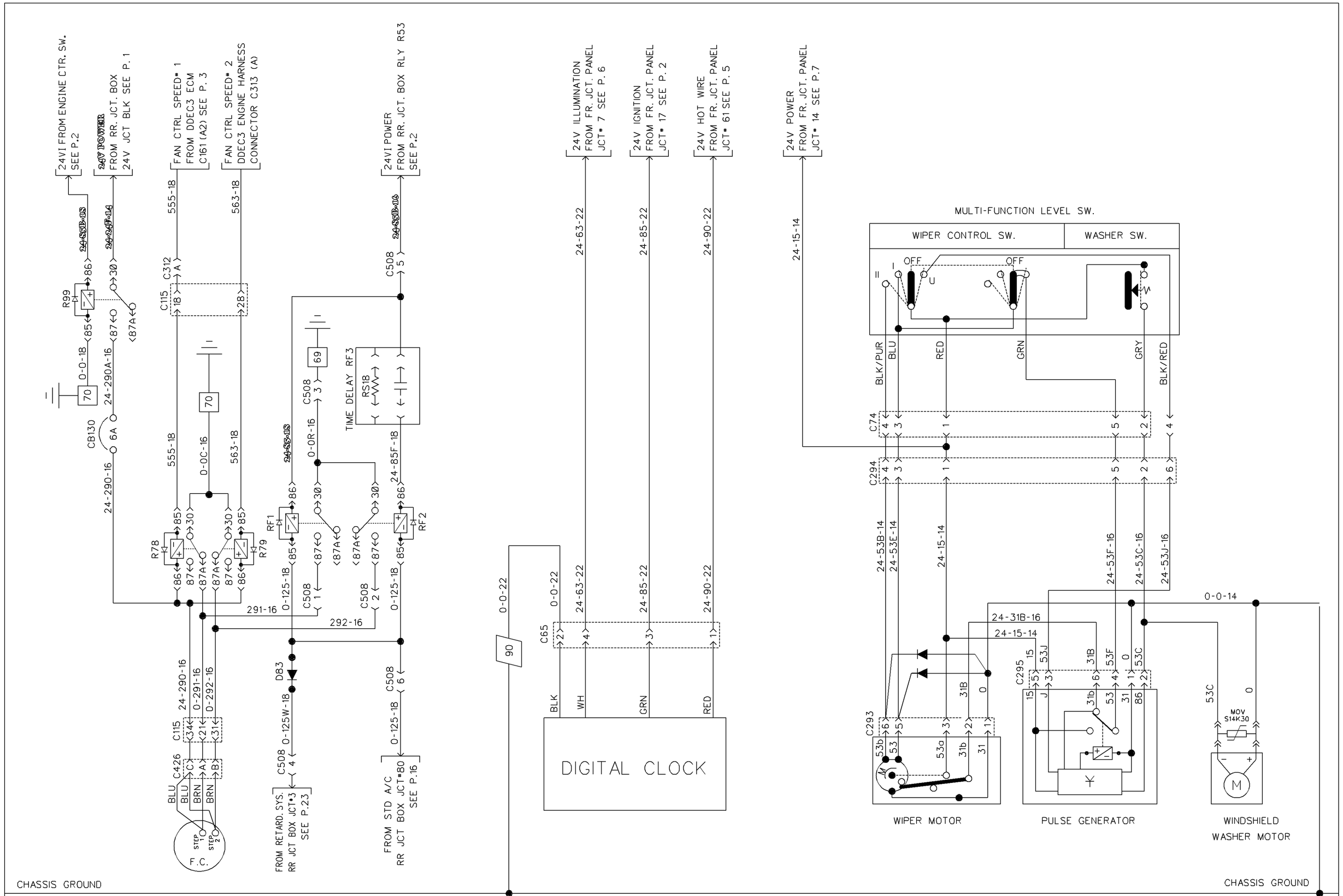

RADIATOR FAN CLUTCH | DIGITAL CLOCK | WINDSHIELD WIPER AND WASHER

PREVOST CAR inc.	WIRING DIAGRAM	NO: D060872	P. 9	REVISION 007

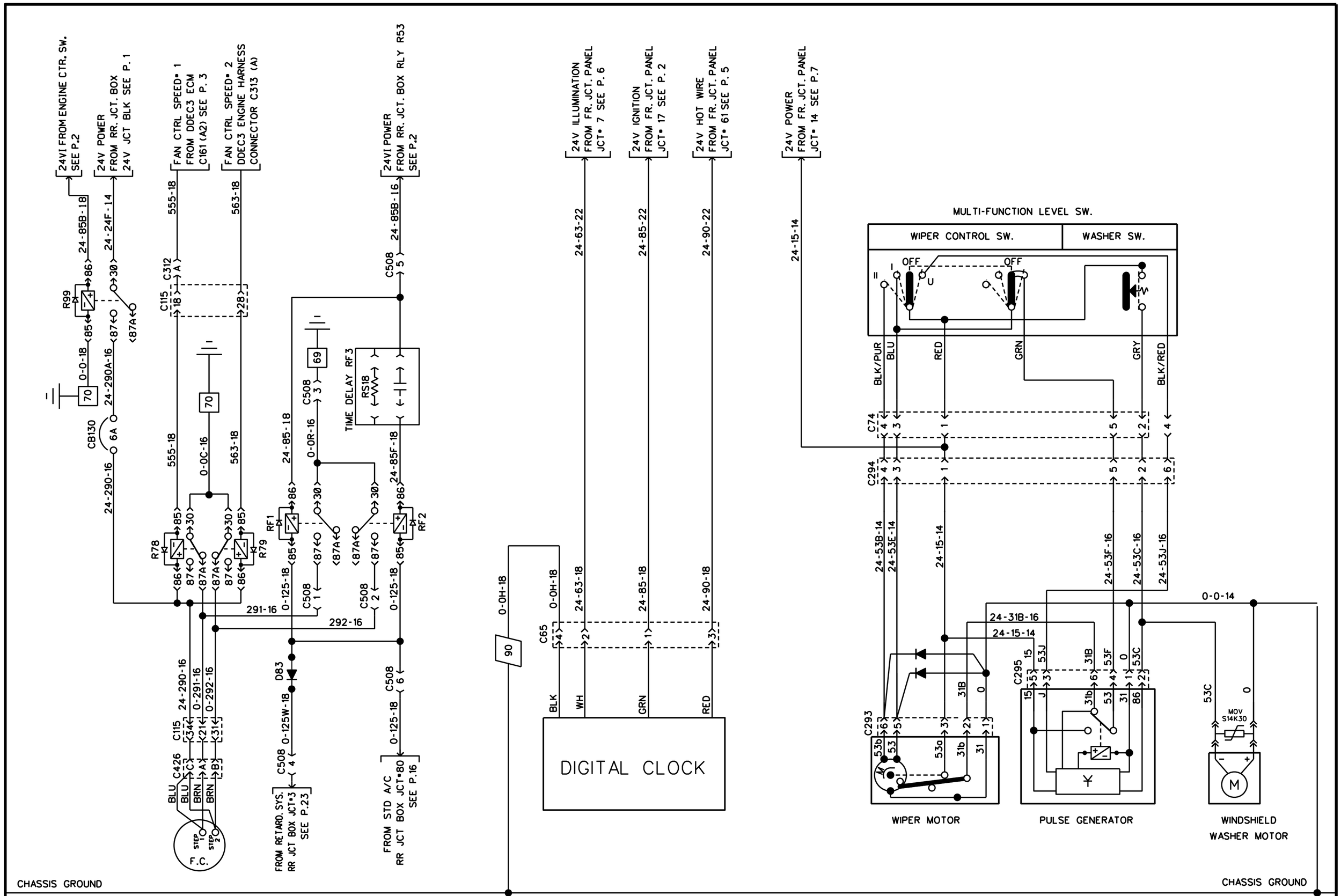

RADIATOR FAN CLUTCH | DIGITAL CLOCK | WINDSHIELD WIPER AND WASHER

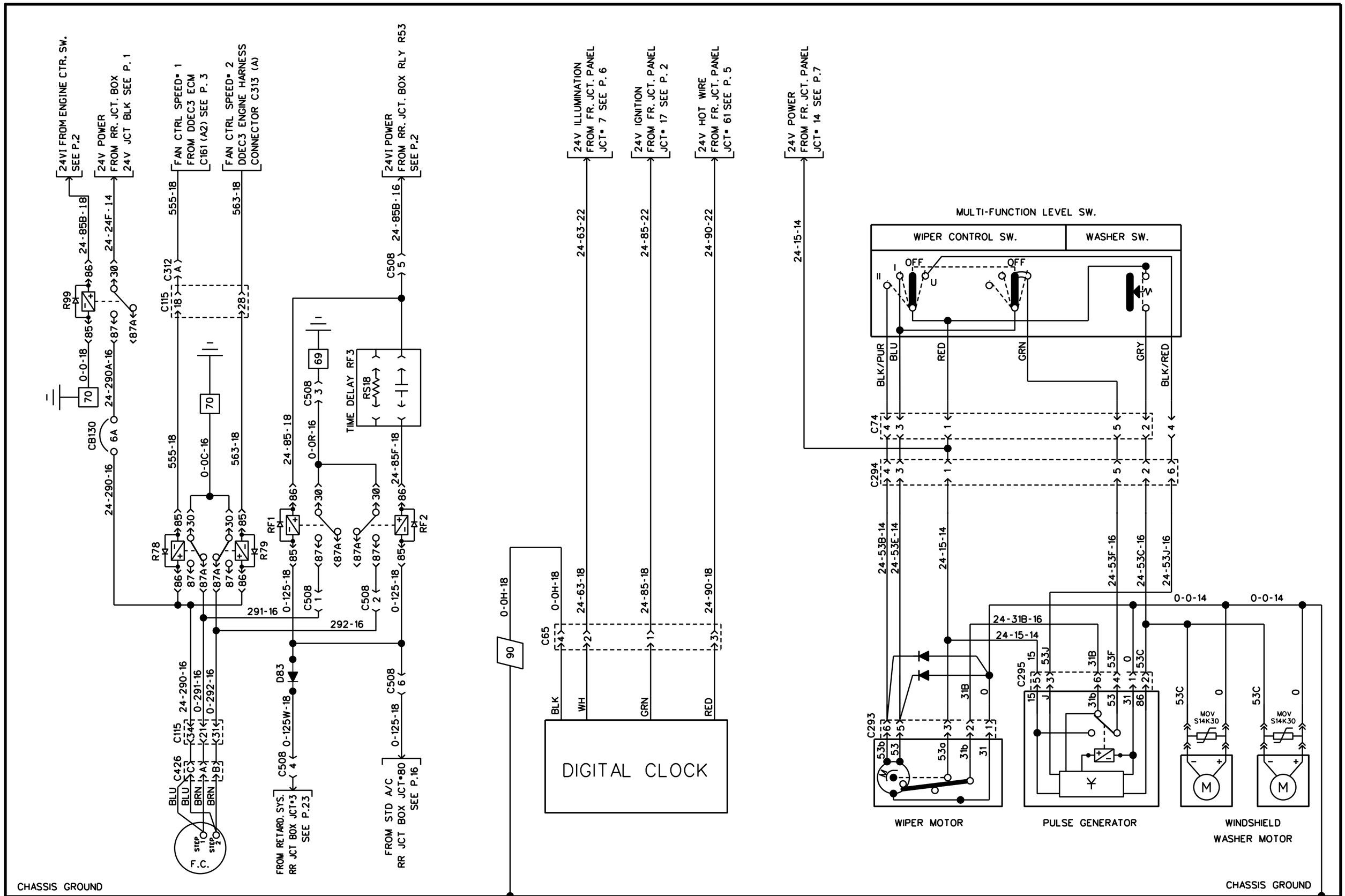

RADIATOR FAN CLUTCH | DIGITAL CLOCK | WINDSHIELD WIPER AND WASHER

PREVOST CAR inc.	WIRING DIAGRAM	NO: D060872	P. 9	REVISION 017

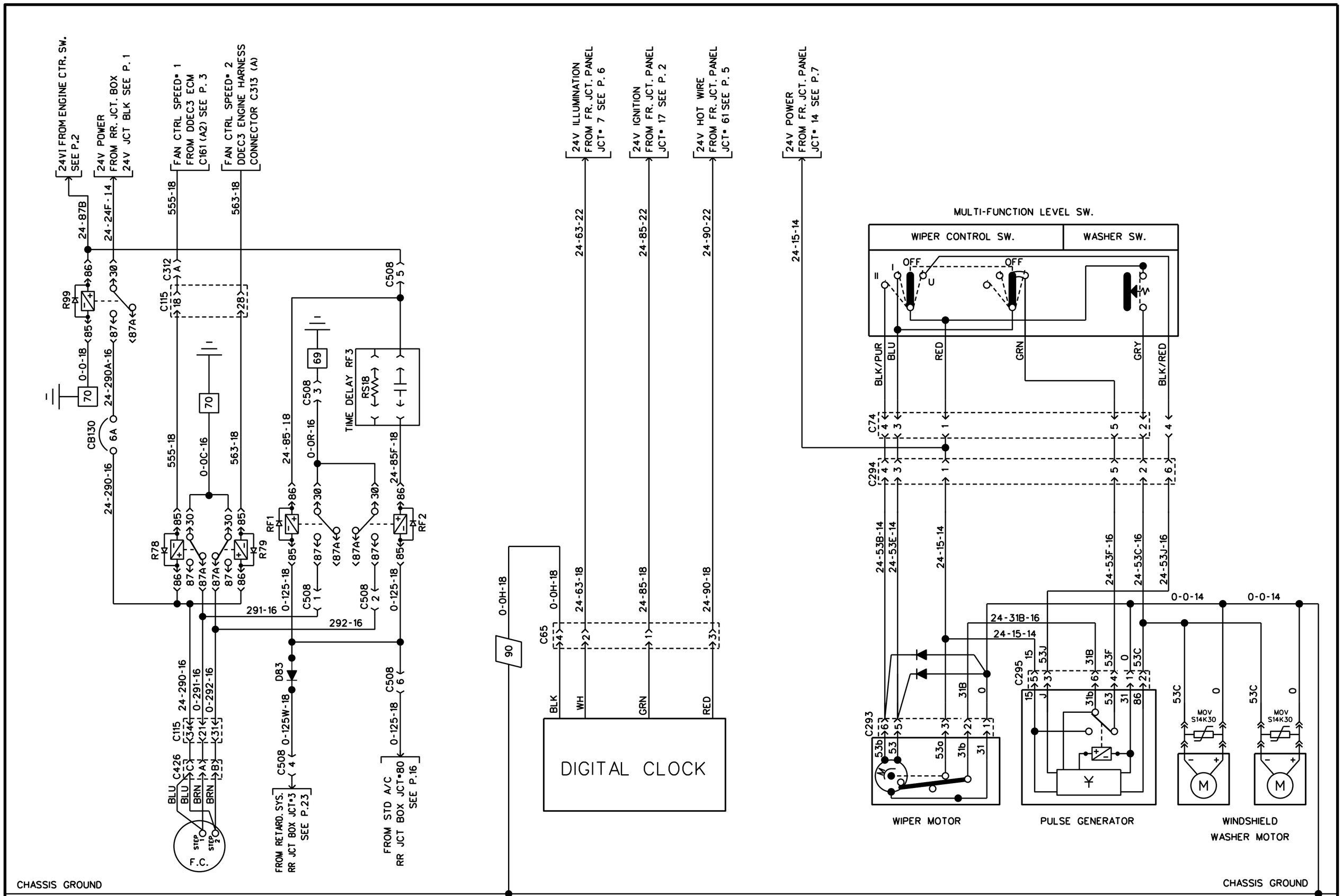

RADIATOR FAN CLUTCH | DIGITAL CLOCK | WINDSHIELD WIPER AND WASHER

PREVOST CAR inc.	WIRING DIAGRAM	NO: D060872	P. 9	REVISION 029

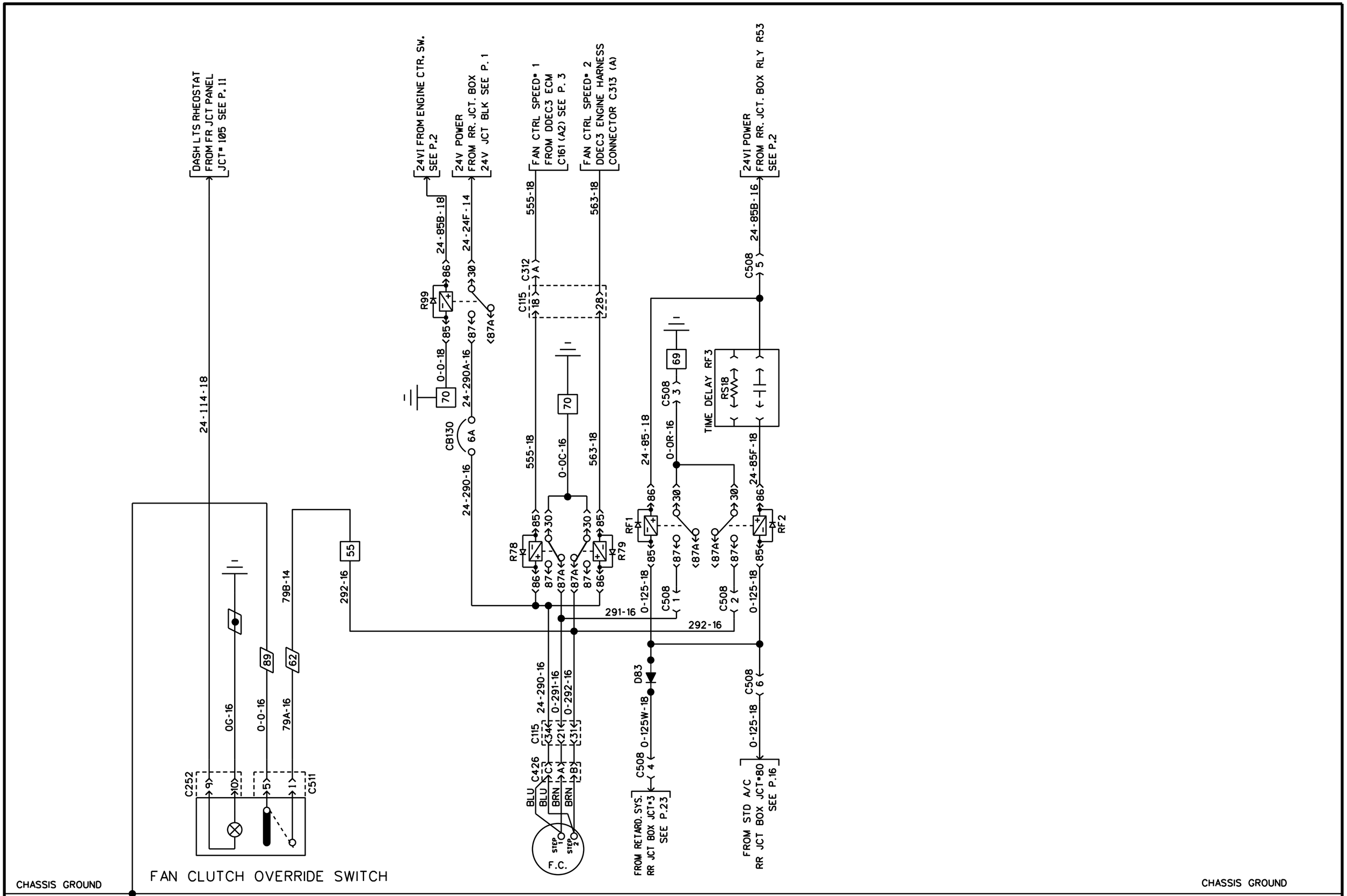

RADIATOR FAN CLUTCH WITH DRIVER'S OVERRIDE SWITCH

SPECIAL OPTION

PREVOST CAR inc.	WIRING DIAGRAM	NO: D060872	P. 9SP1	REVISION 019

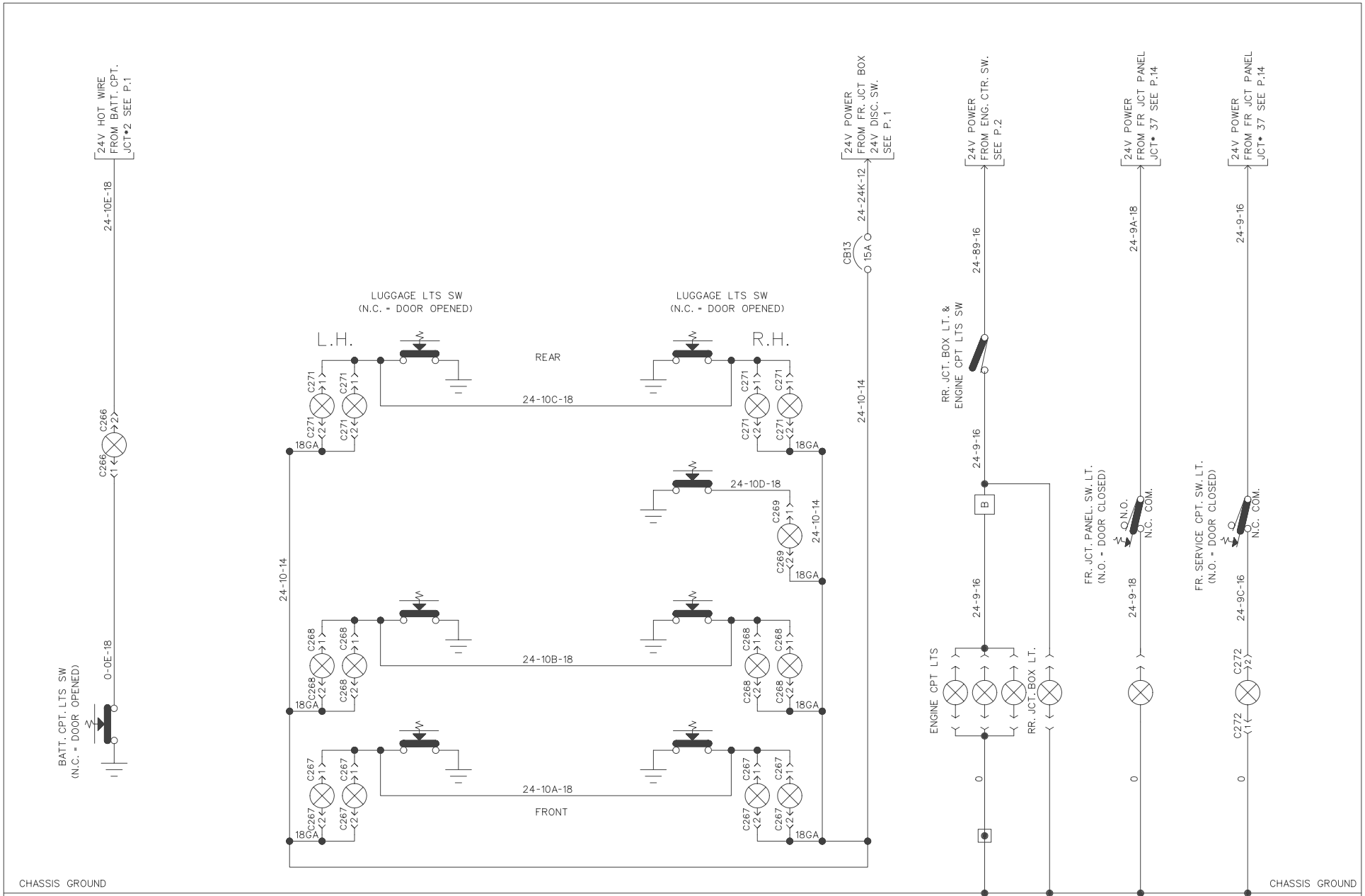

INTERIOR LIGHTING

PREVOST CAR inc.	WIRING DIAGRAM	NO: D060872	P. 10	REVISION 000

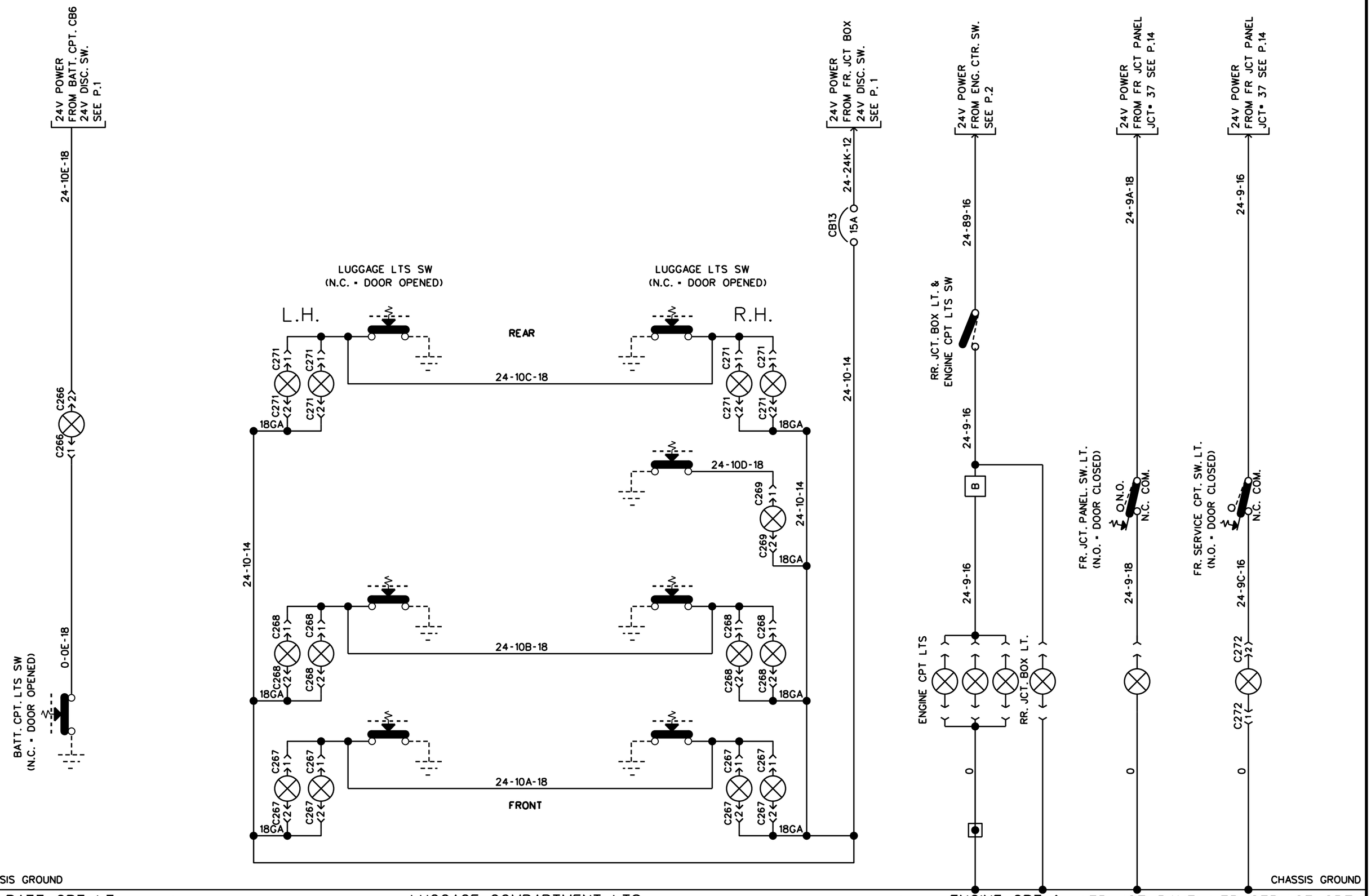

BATT. CPT LT. | LUGGAGE COMPARTMENT LTS | ENGINE CPT. & RR JCT BOX LTS | FR. JCT. PANEL LT. | FR. SERVICE CPT LT.

INTERIOR LIGHTING

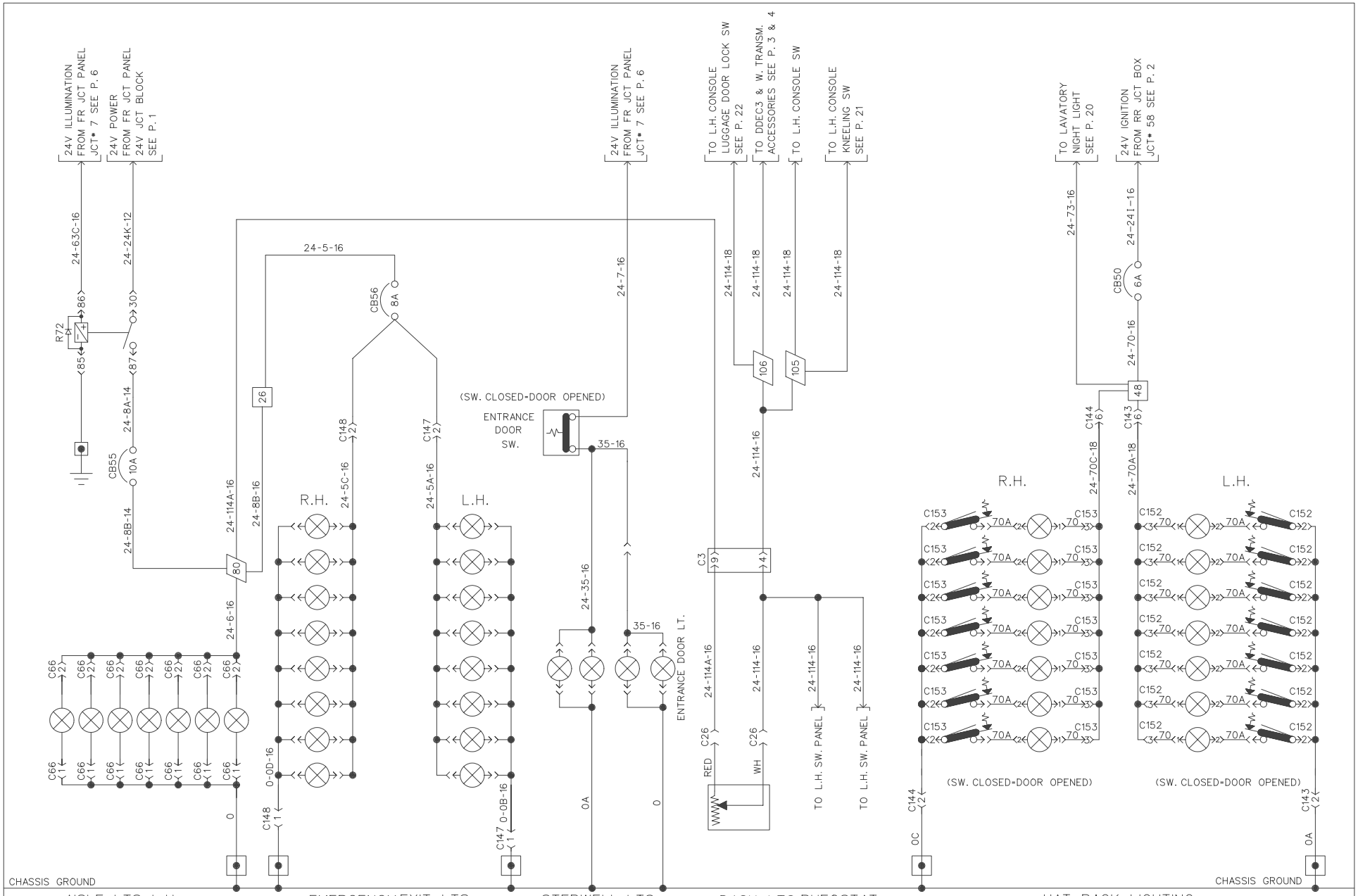

INTERIOR LIGHTING

PREVOST CAR inc.	WIRING DIAGRAM	NO: D060872	P. 11	REVISION 000

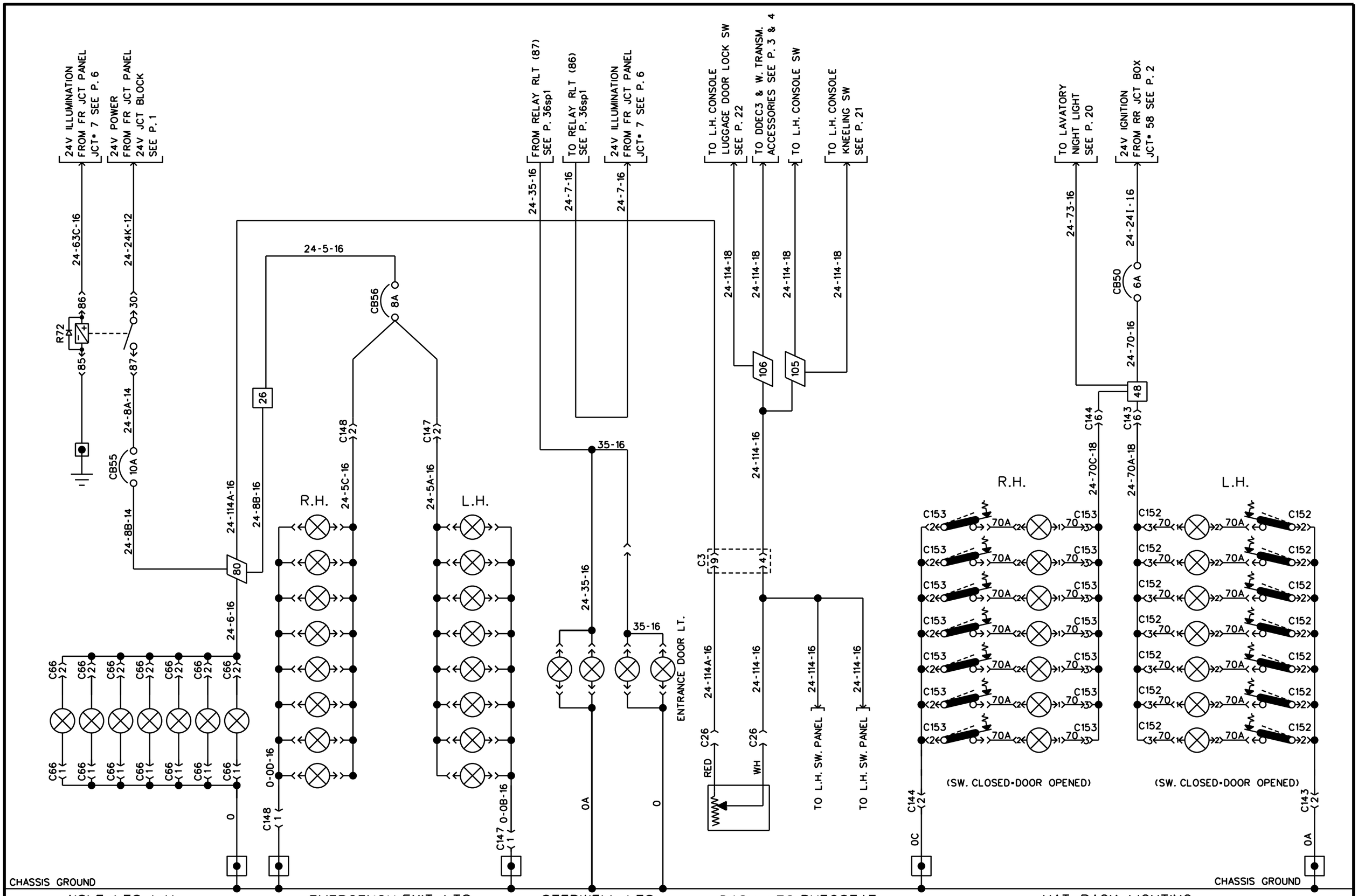

INTERIOR LIGHTING

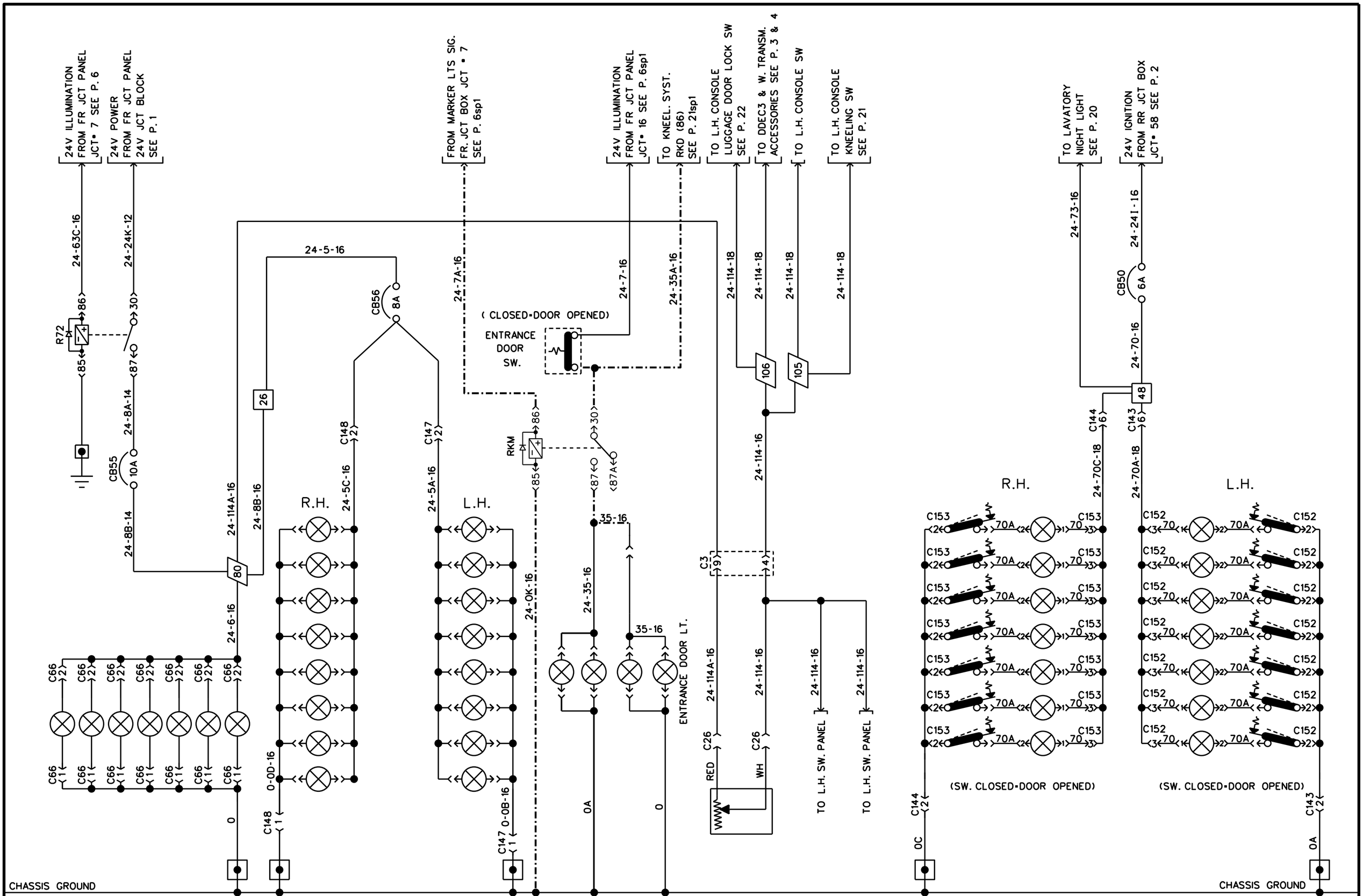

INTERIOR LIGHTING

PREVOST CAR inc.	WIRING DIAGRAM	NO: D060872	P. 11sp2	REVISION 000

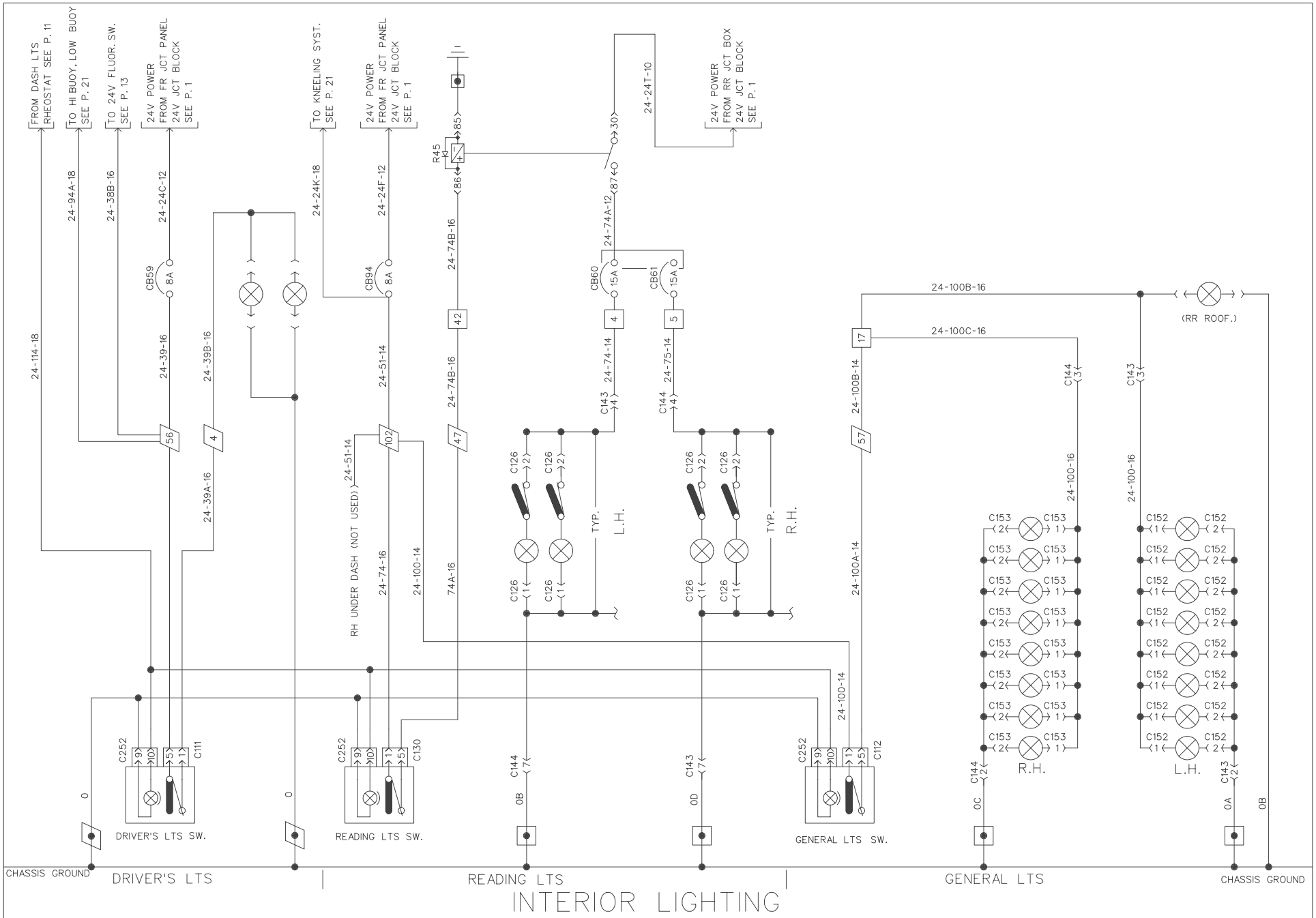

INTERIOR LIGHTING

PREVOST CAR inc.	WIRING DIAGRAM	NO: D060872	P. 12	REVISION 000

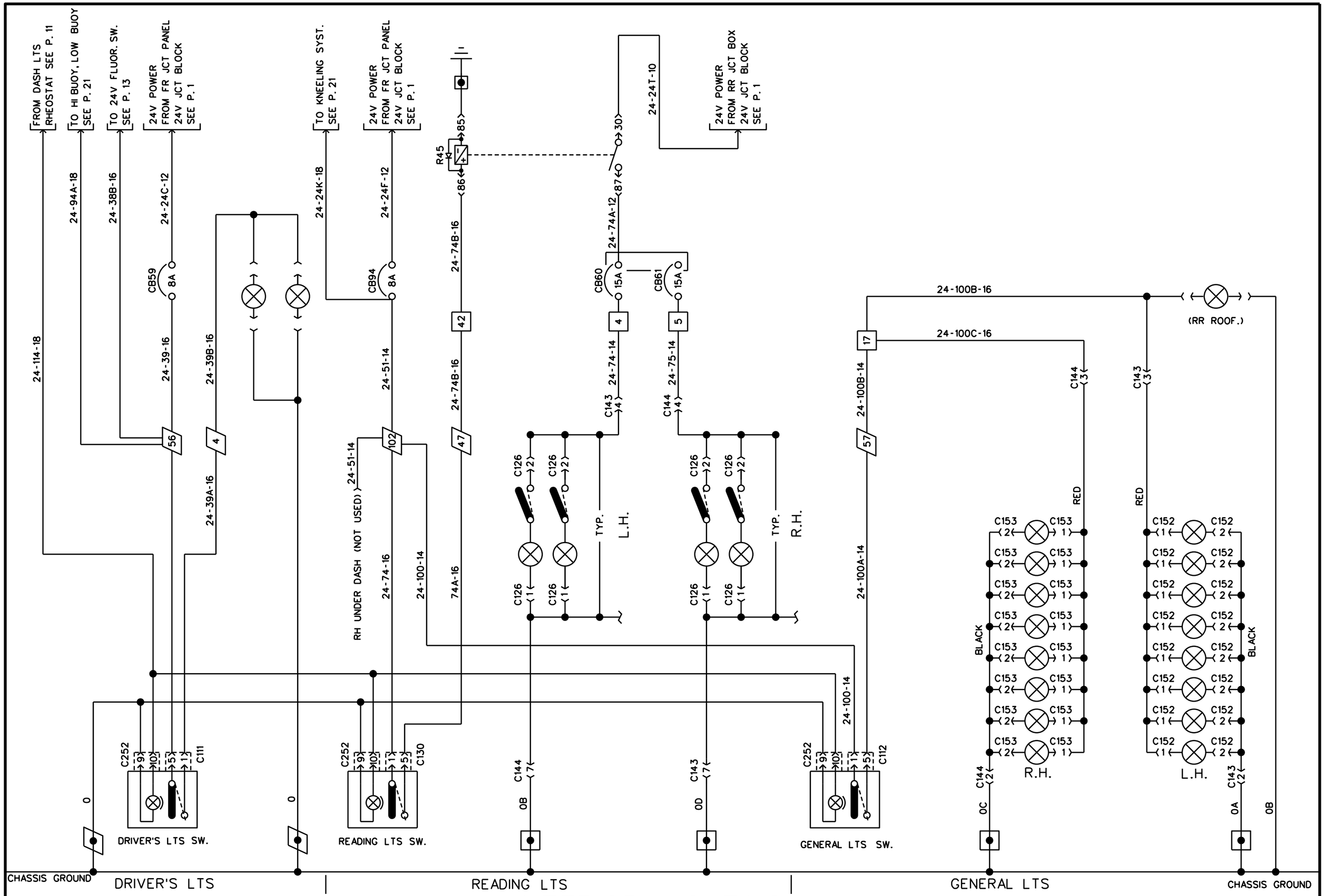

INTERIOR LIGHTING

PREVOST CAR inc.	WIRING DIAGRAM	NO: D060872	P. 12	REVISION 016

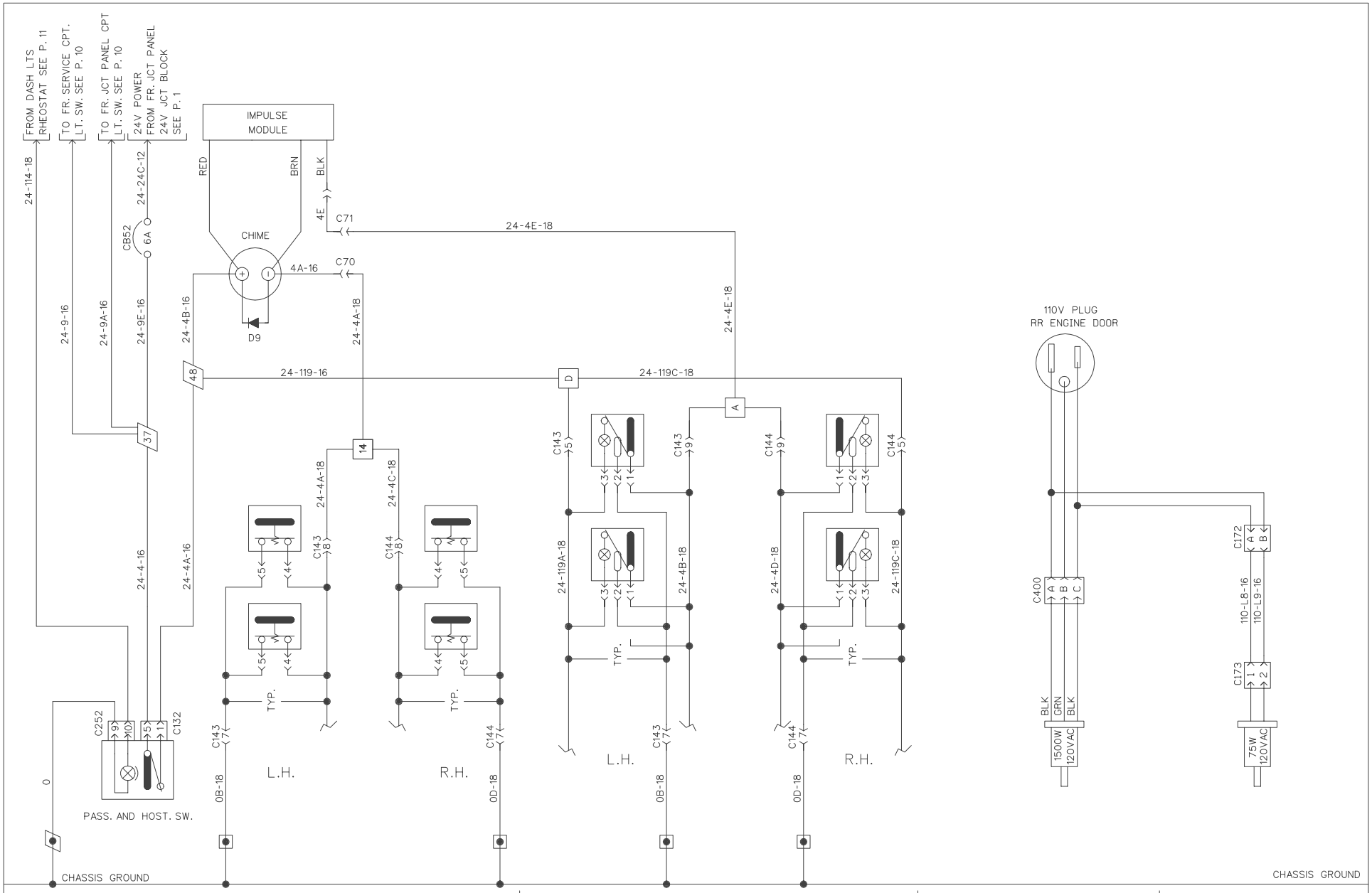

PASSENGER CHIME | HOSTESS CHIME | ENGINE BLOCK HEATER | WATER TANK HEATER

PREVOST CAR inc. | WIRING DIAGRAM | NO: D060872 | P.14 | REVISION 000

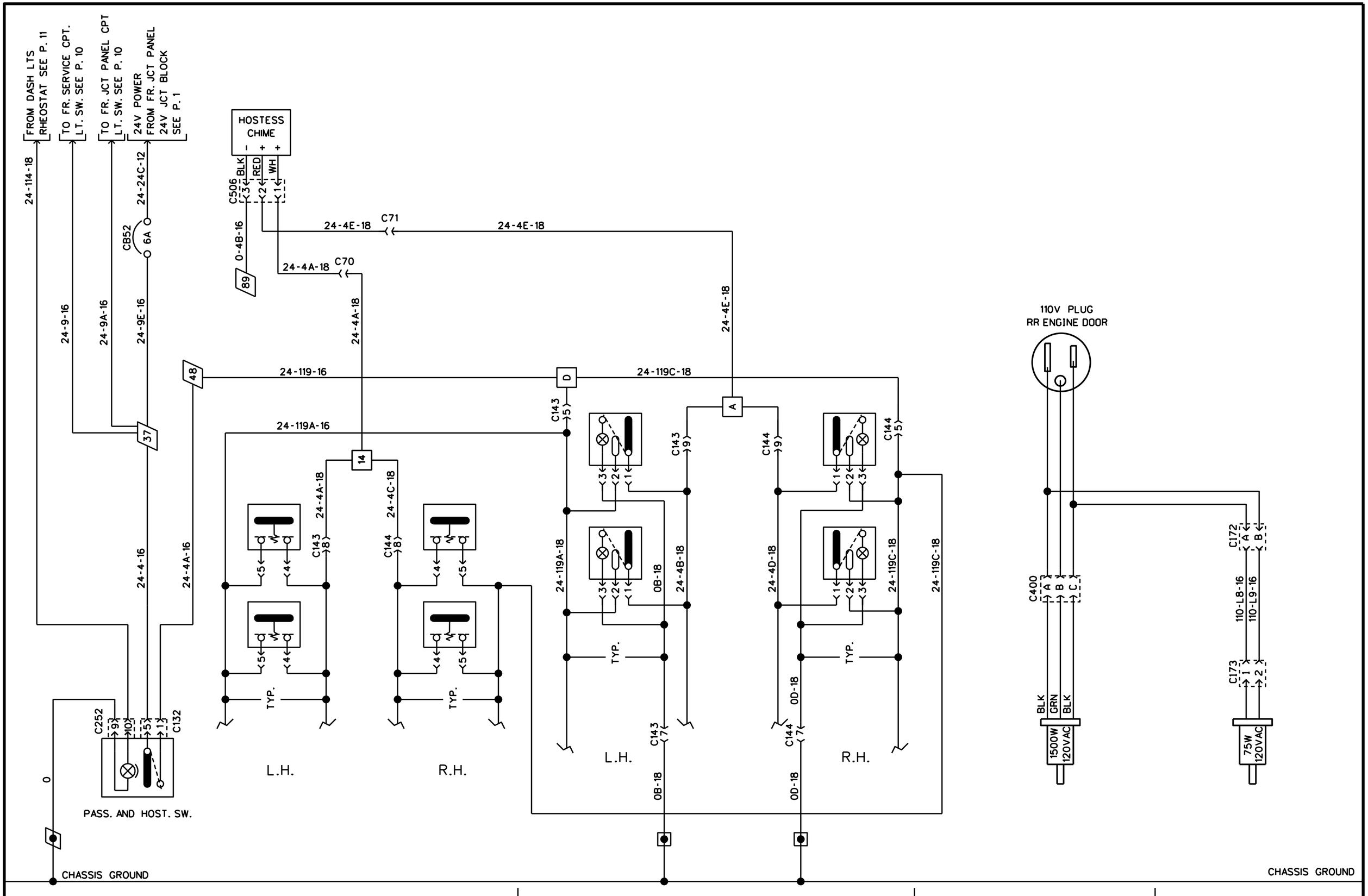

PASSENGER CHIME	HOSTESS CHIME	ENGINE BLOCK HEATER	WATER TANK HEATER

PREVOST CAR inc.	WIRING DIAGRAM	NO: D060872	P. 14	REVISION 023

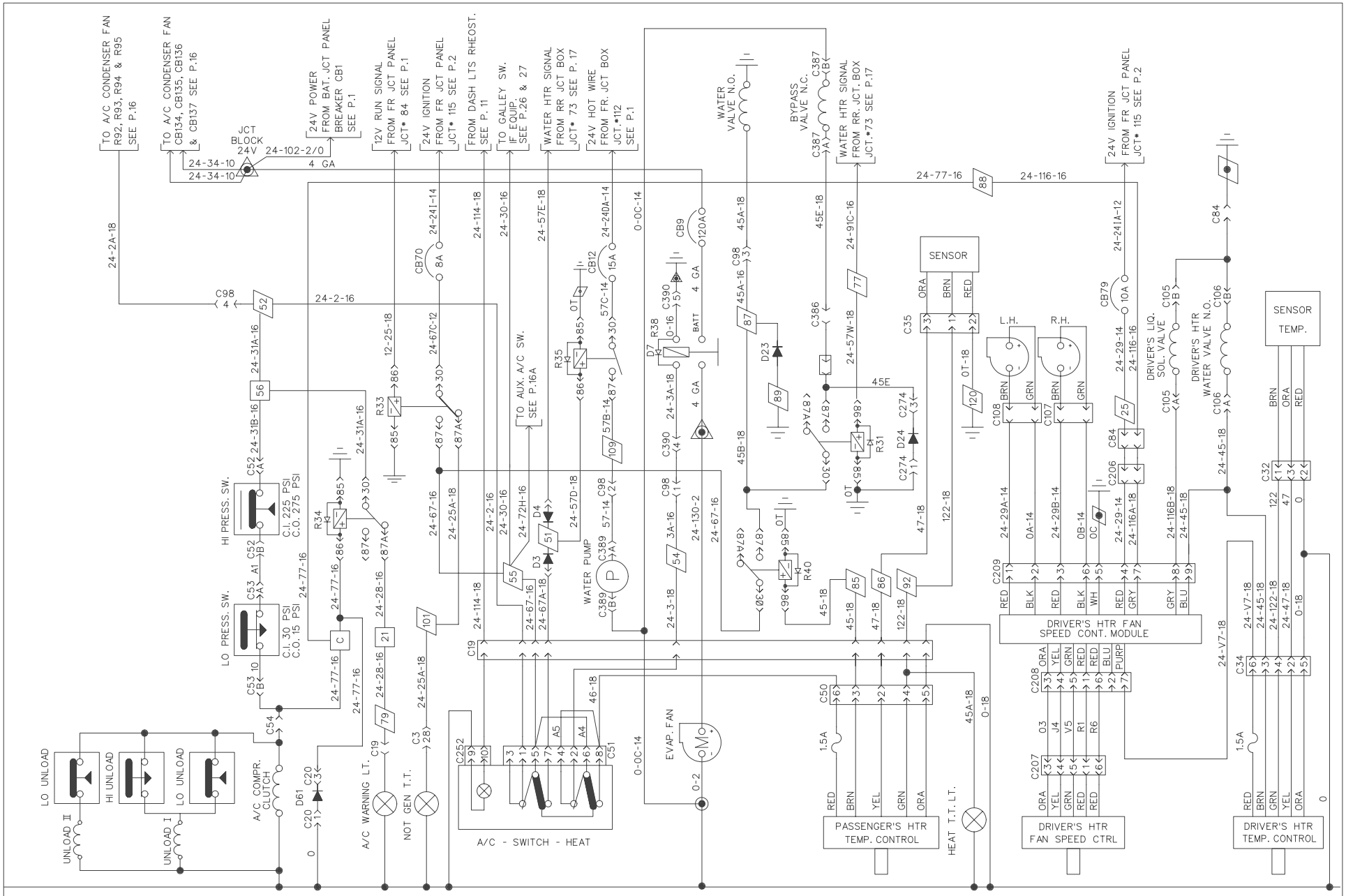

A/C AND HEAT SYSTEM

PREVOST CAR inc.	WIRING DIAGRAM	NO: D060872	P. 15	REVISION 000

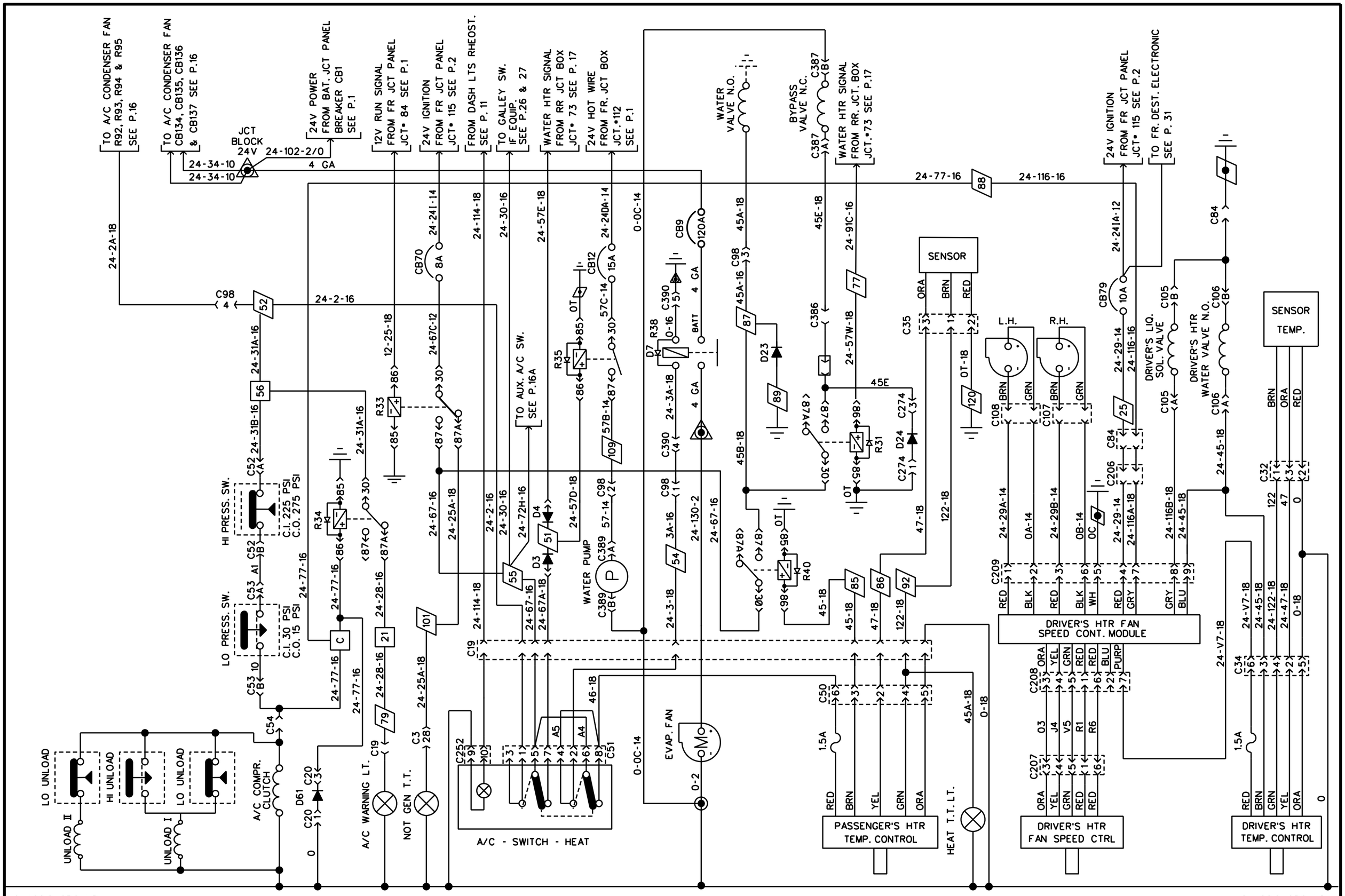

A/C AND HEAT SYSTEM

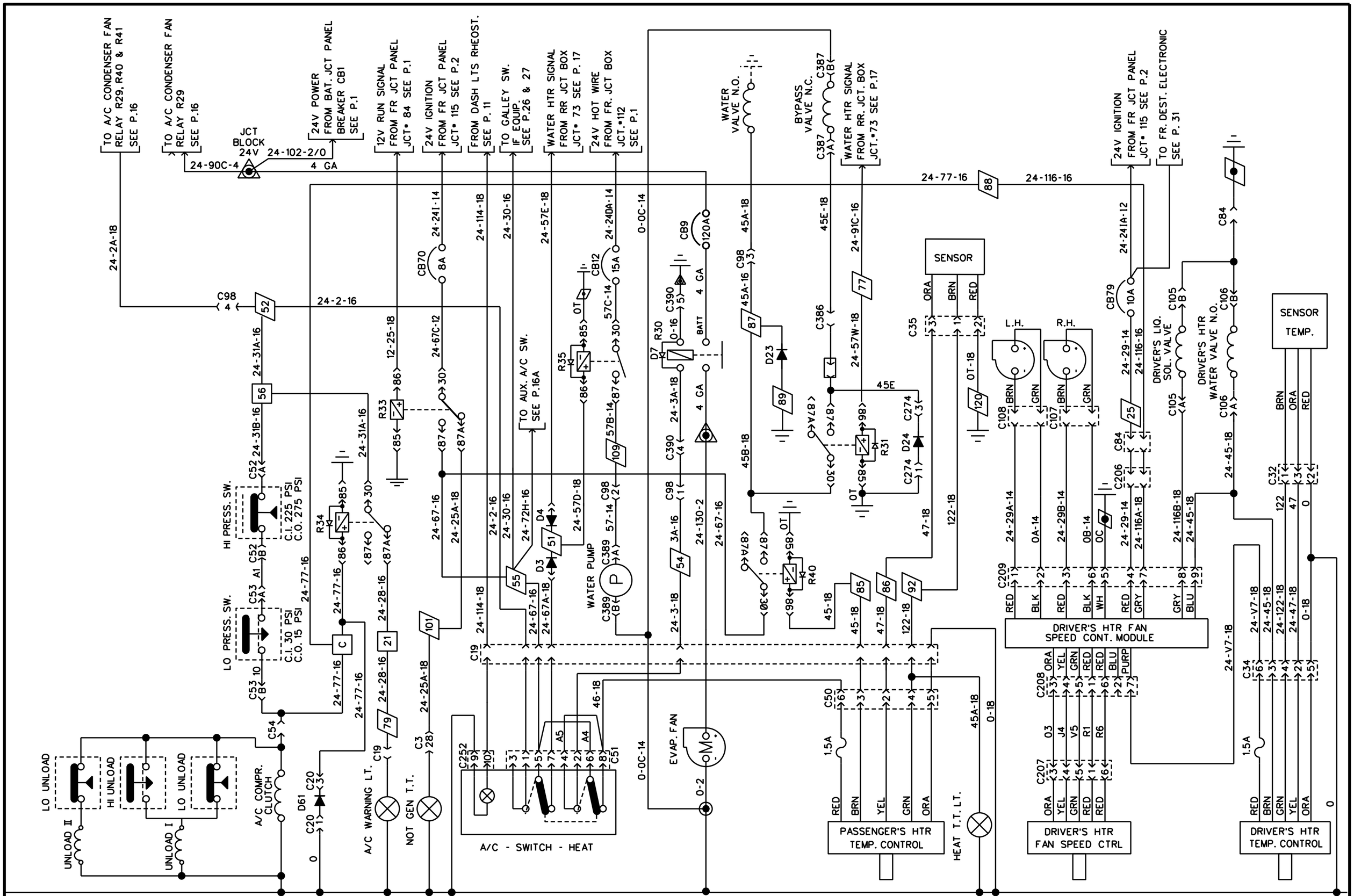

A/C AND HEAT SYSTEM

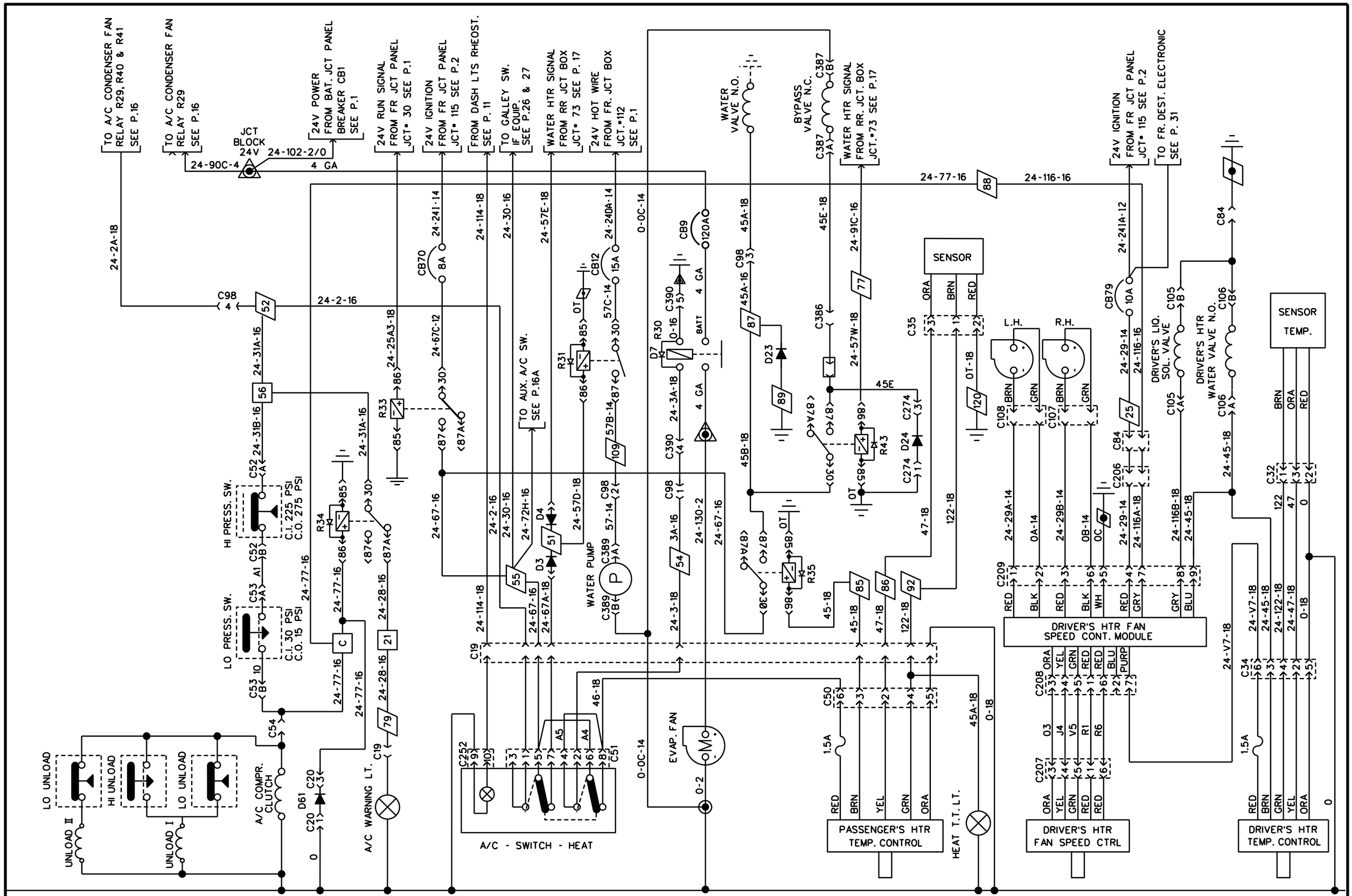

A/C AND HEAT SYSTEM

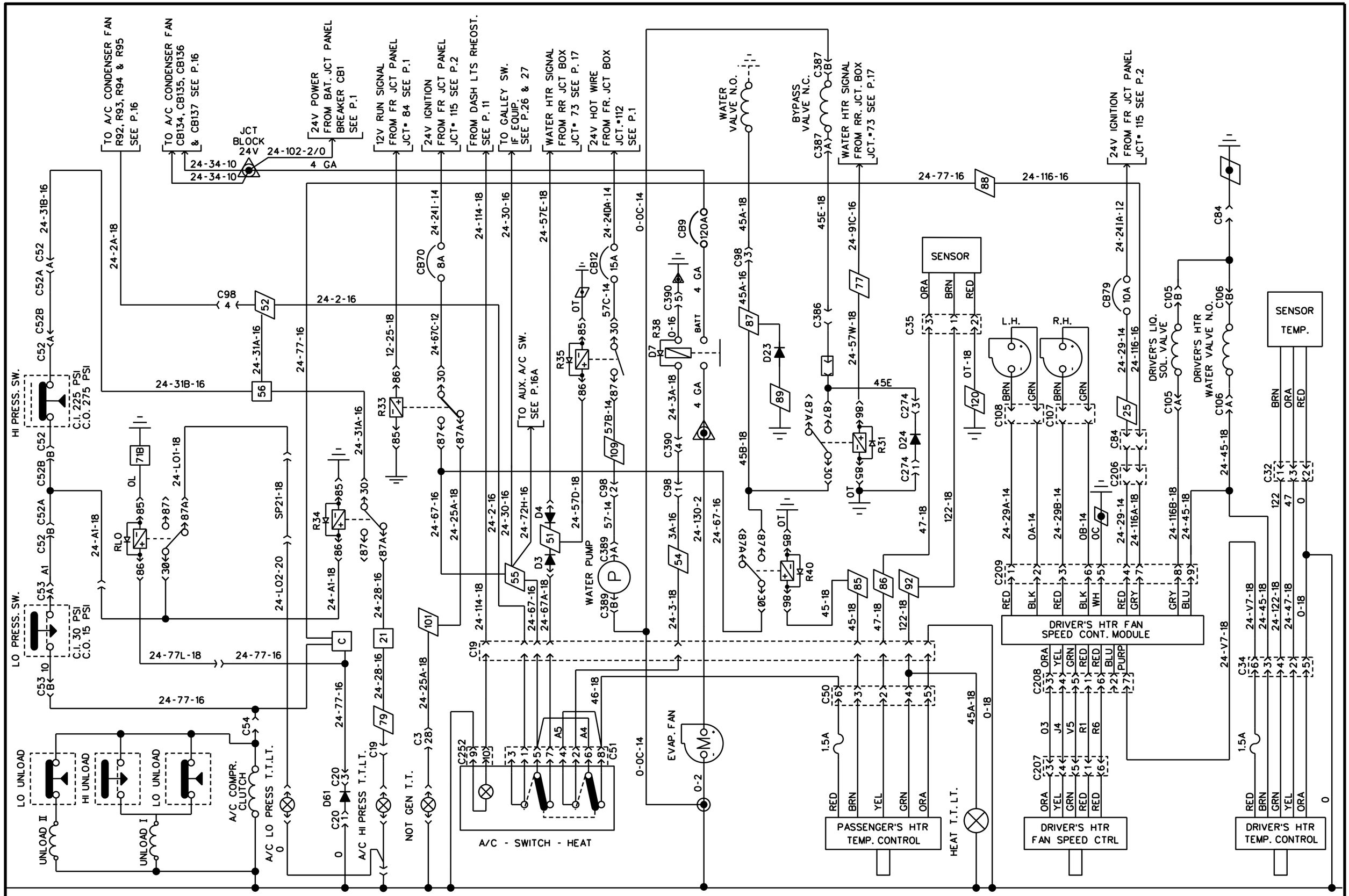

SPECIAL A/C AND HEAT SYSTEM WITH A/C HI - LO PRESS. T. T. LT.

VEH.•V6087,V6090

PREVOST CAR inc.	WIRING DIAGRAM	NO: D060872	P. 15SP1	REVISION 001

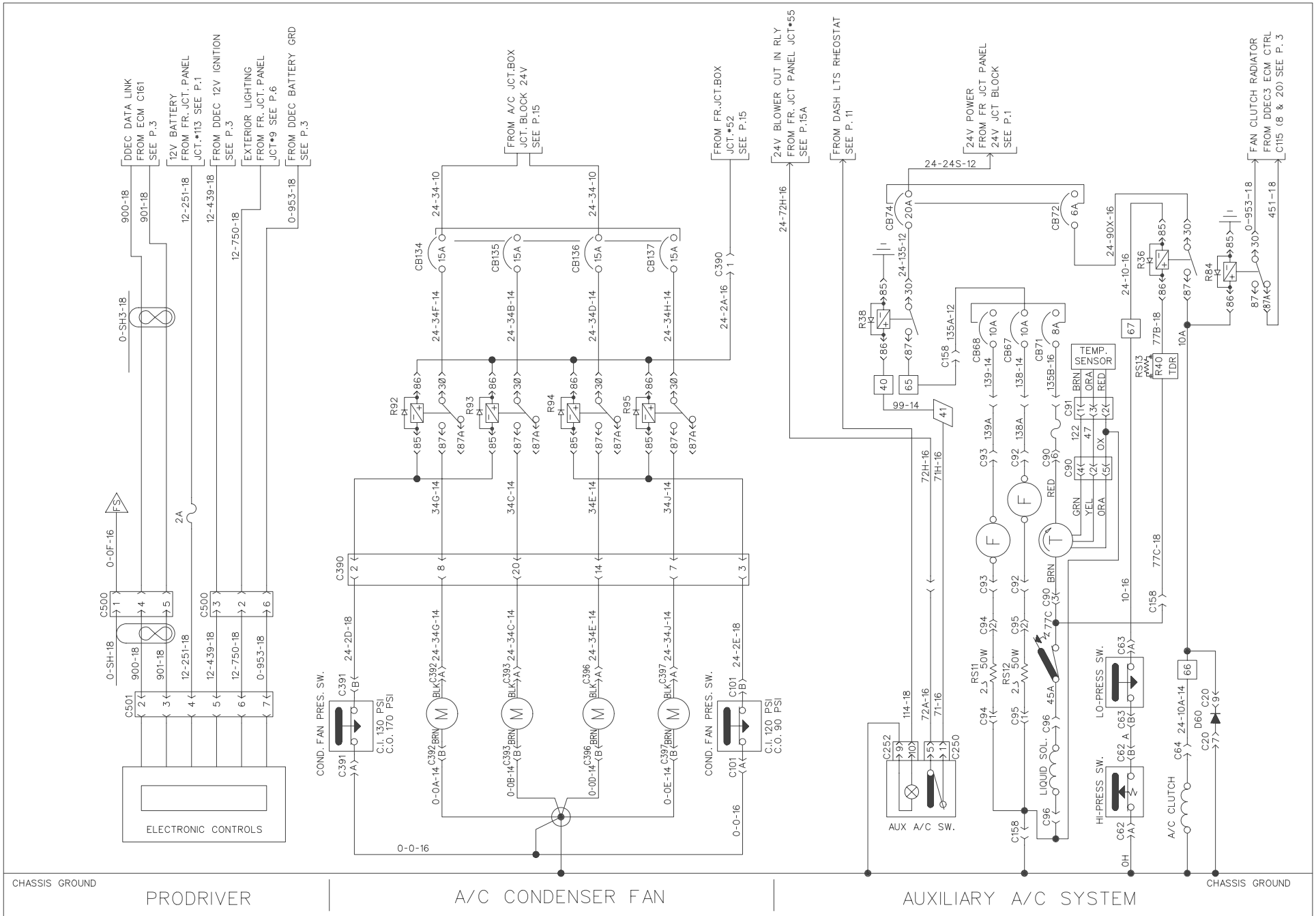

PRODRIVER | A/C CONDENSER FAN | AUXILIARY A/C SYSTEM

PREVOST CAR inc.	WIRING DIAGRAM	NO: D060872	P. 16	REVISION 000

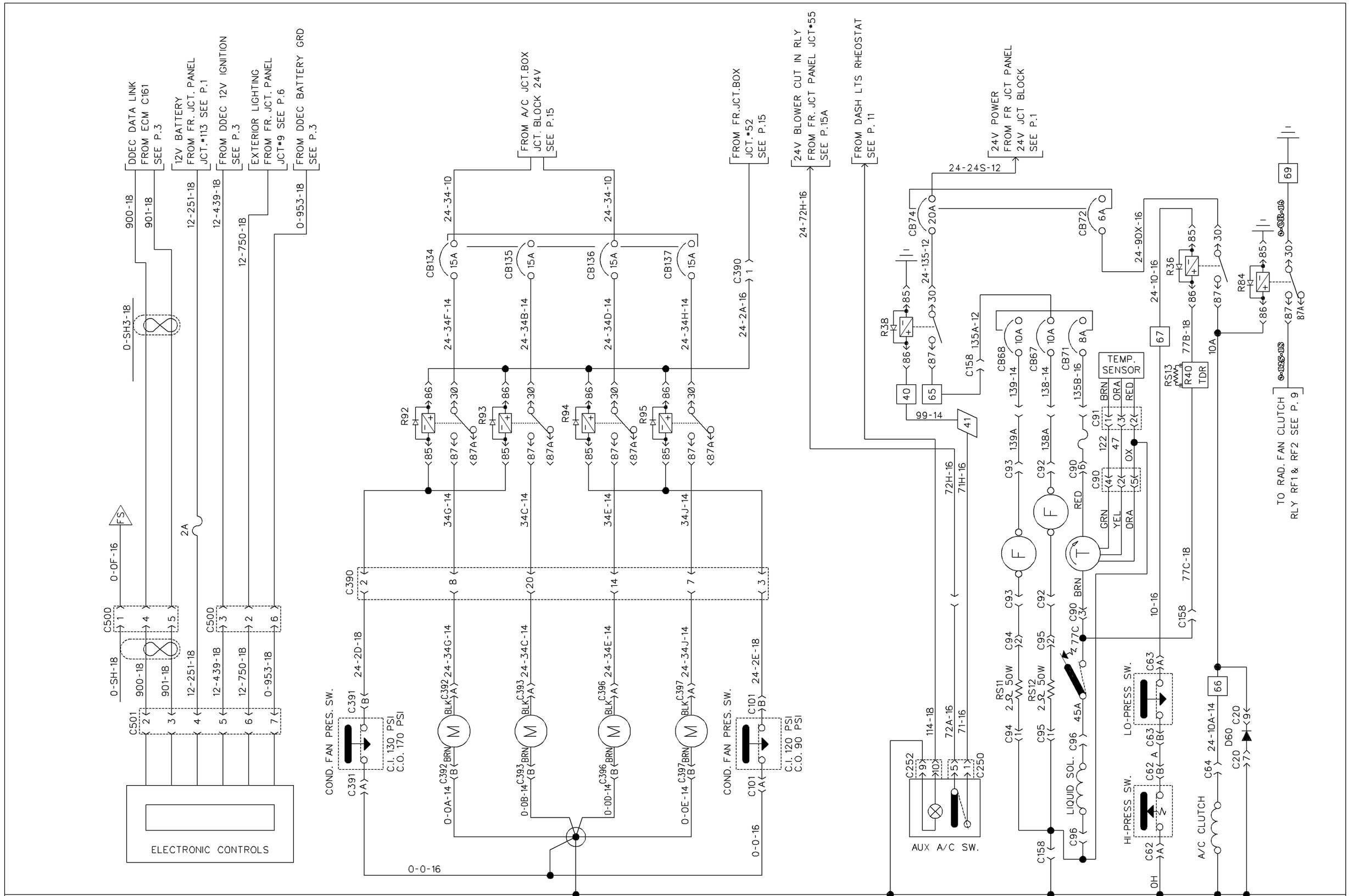

PREVOST CAR inc. | WIRING DIAGRAM | NO: D060872 | P. 16 | REVISION 007

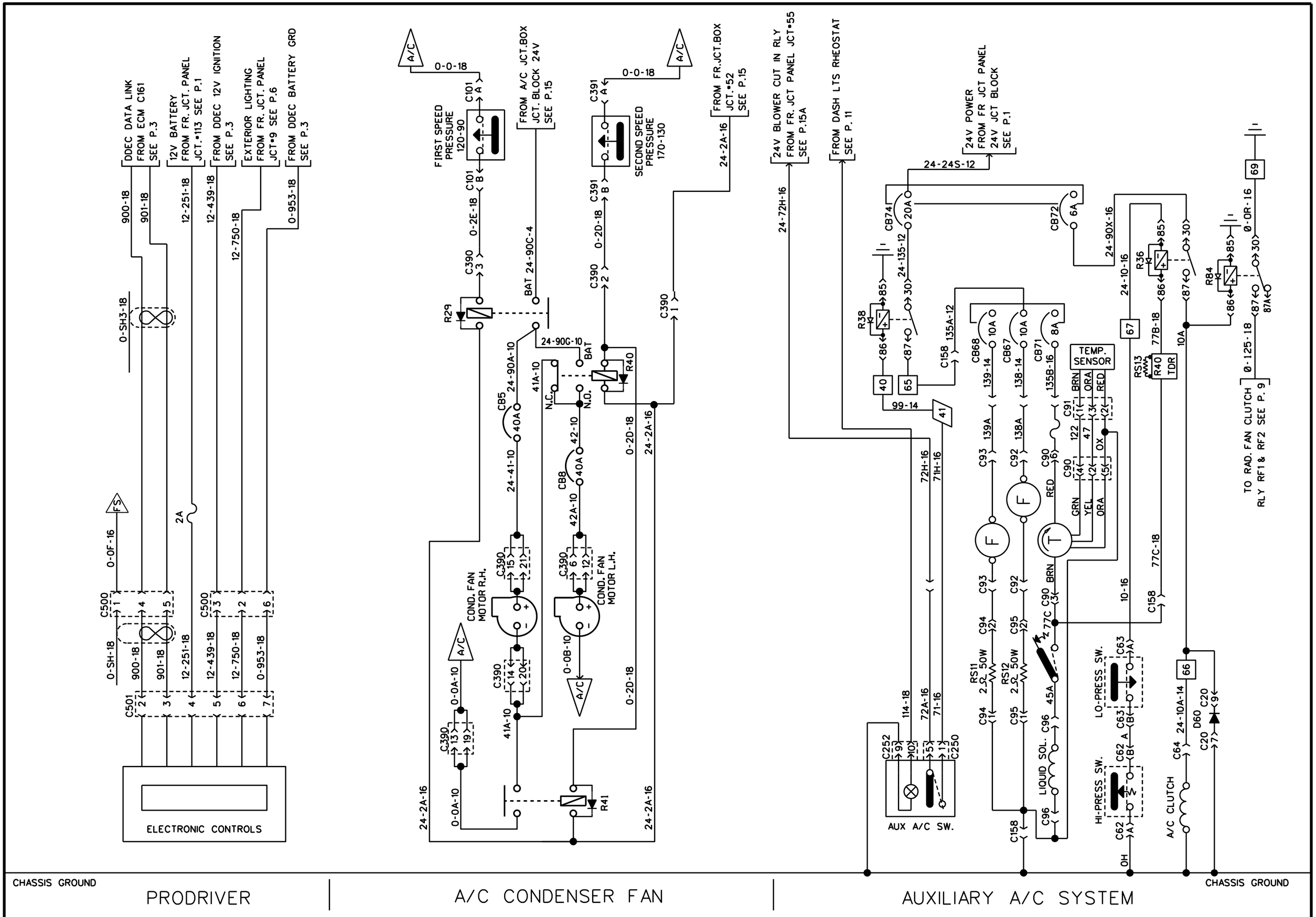
DDEC DATA LINK FROM ECM C161 SEE P.3
12V BATTERY FROM FR. JCT. PANEL JCT.•113 SEE P.1
FROM DDEC 12V IGNITION SEE P.3
EXTERIOR LIGHTING FROM FR. JCT. PANEL JCT•9 SEE P.6
FROM DDEC BATTERY GRD SEE P.3
ELECTRONIC CONTROLS
FIRST SPEED PRESSURE 120-90
FROM A/C JCT.BOX JCT. BLOCK 24V SEE P.15
SECOND SPEED PRESSURE 170-130
FROM FR.JCT.BOX JCT.•52 SEE P.15
COND. FAN MOTOR R.H.
COND. FAN MOTOR L.H.
24V BLOWER CUT IN RLY FROM FR. JCT PANEL JCT•55 SEE P.15A
FROM DASH LTS RHEOSTAT SEE P. 11
24V POWER FROM FR JCT PANEL 24V JCT BLOCK SEE P.1
TEMP. SENSOR
AUX A/C SW.
LIQUID SOL.
LO-PRESS SW.
HI-PRESS SW.
A/C CLUTCH
TO RAD. FAN CLUTCH RLY RF1 & RF2 SEE P. 9
CHASSIS GROUND
PRODRIVER
A/C CONDENSER FAN
AUXILIARY A/C SYSTEM

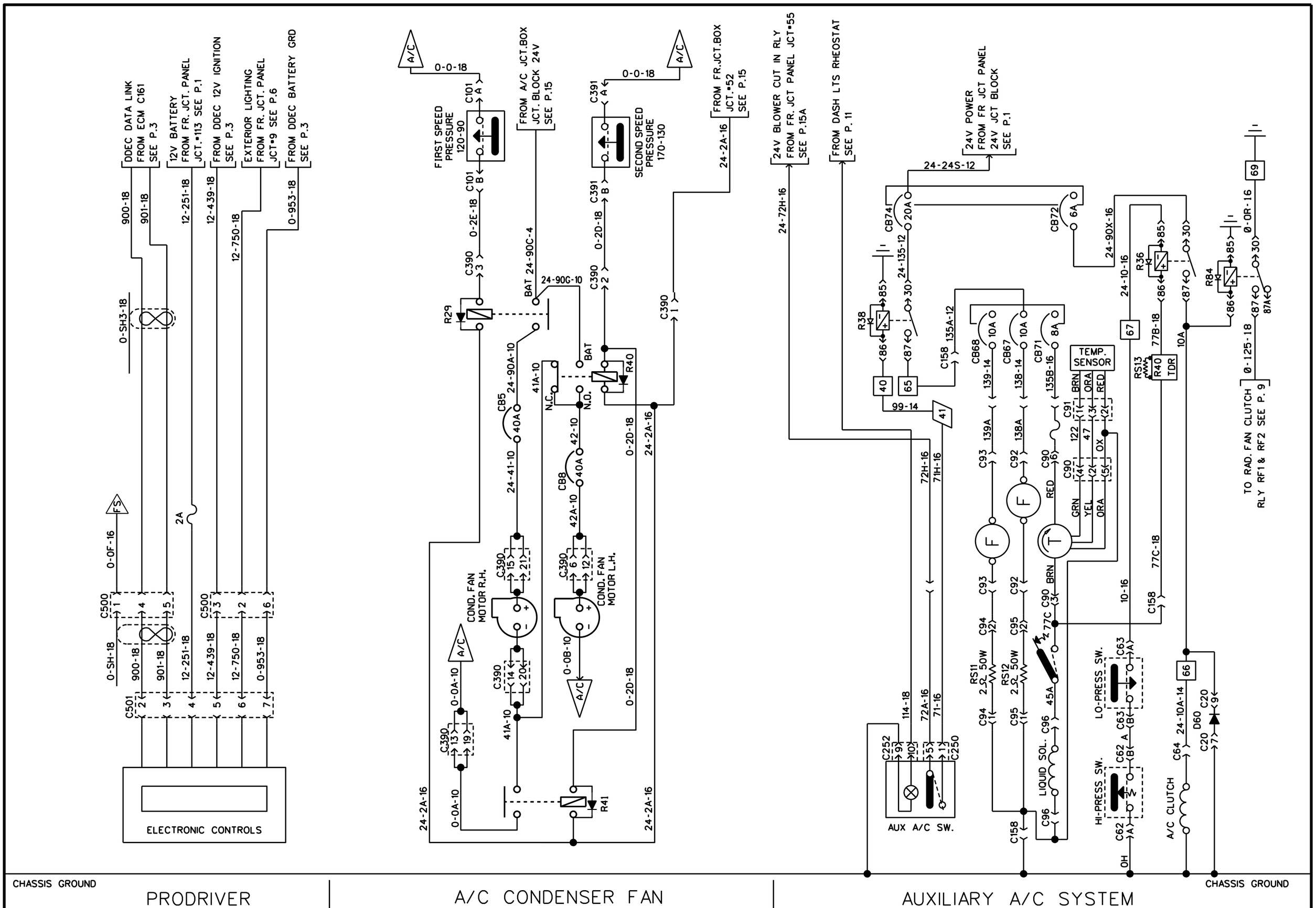

PRODRIVER | A/C CONDENSER FAN | AUXILIARY A/C SYSTEM

PREVOST CAR inc.	WIRING DIAGRAM	NO: D060872	P. 16	REVISION 030

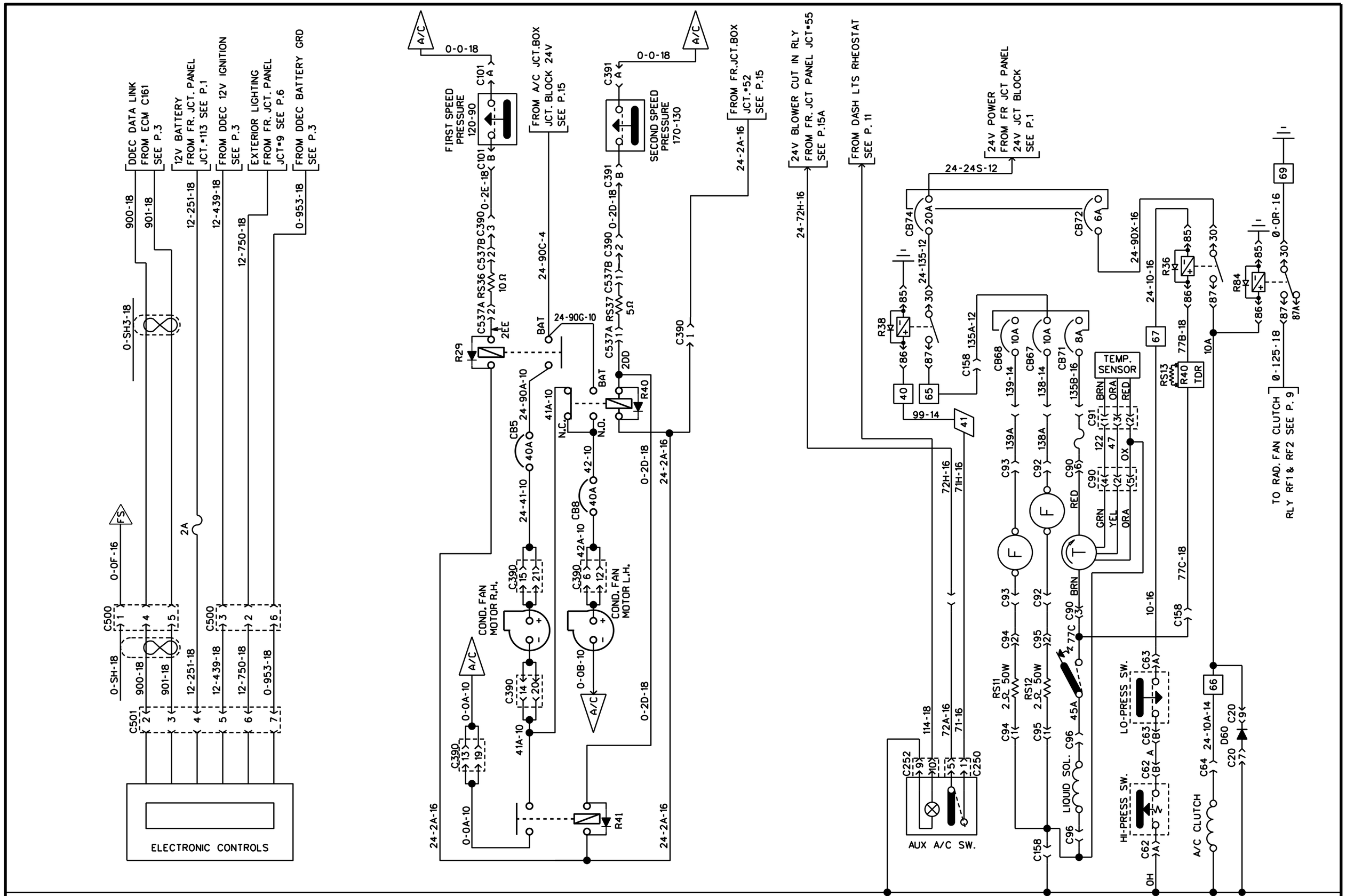
DDEC DATA LINK FROM ECM C161 SEE P.3
12V BATTERY FROM FR. JCT. PANEL JCT.#113 SEE P.1
FROM DDEC 12V IGNITION SEE P.3
EXTERIOR LIGHTING FROM FR. JCT. PANEL JCT#9 SEE P.6
FROM DDEC BATTERY GRD SEE P.3
ELECTRONIC CONTROLS
FIRST SPEED PRESSURE 120-90
FROM A/C JCT.BOX JCT. BLOCK 24V SEE P.15
SECOND SPEED PRESSURE 170-130
FROM FR.JCT.BOX JCT.#52 SEE P.15
COND. FAN MOTOR R.H.
COND. FAN MOTOR L.H.
24V BLOWER CUT IN RLY FROM FR. JCT PANEL JCT#55 SEE P.15A
FROM DASH LTS RHEOSTAT SEE P. 11
24V POWER FROM FR JCT PANEL 24V JCT BLOCK SEE P.1
TEMP. SENSOR
LIQUID SOL.
LO-PRESS SW.
HI-PRESS SW.
AUX A/C SW.
A/C CLUTCH
TO RAD. FAN CLUTCH RLY RF1 & RF2 SEE P. 9
CHASSIS GROUND
CHASSIS GROUND
PRODRIVER
A/C CONDENSER FAN
AUXILIARY A/C SYSTEM

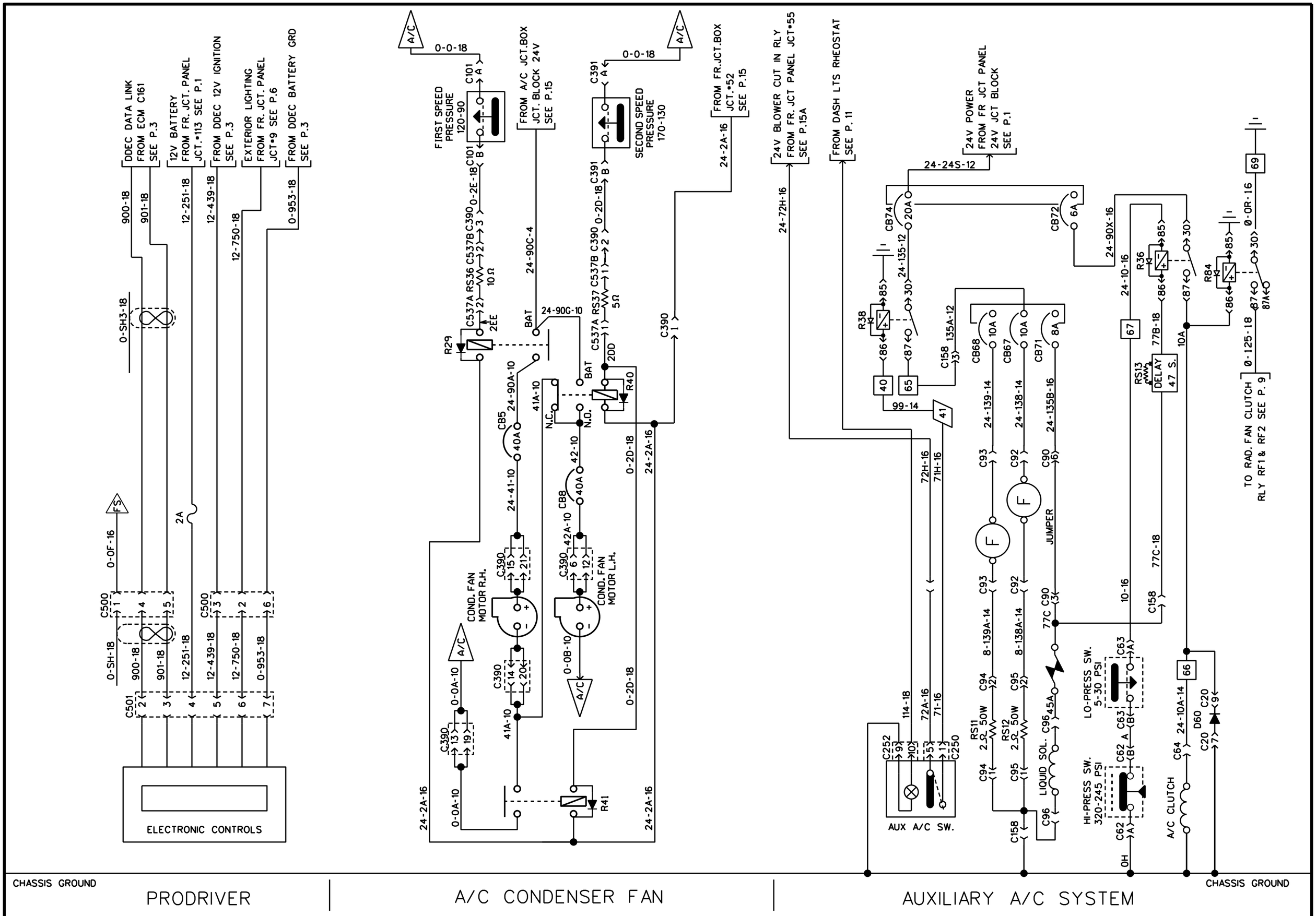
DDEC DATA LINK FROM ECM C161 SEE P.3
12V BATTERY FROM FR. JCT. PANEL JCT.•113 SEE P.1
FROM DDEC 12V IGNITION SEE P.3
EXTERIOR LIGHTING FROM FR. JCT. PANEL JCT•9 SEE P.6
FROM DDEC BATTERY GRD SEE P.3
ELECTRONIC CONTROLS
FIRST SPEED PRESSURE 120-90
FROM A/C JCT.BOX JCT. BLOCK 24V SEE P.15
SECOND SPEED PRESSURE 170-130
FROM FR.JCT.BOX JCT.•52 SEE P.15
COND. FAN MOTOR R.H.
COND. FAN MOTOR L.H.
24V BLOWER CUT IN RLY FROM FR. JCT PANEL JCT•55 SEE P.15A
FROM DASH LTS RHEOSTAT SEE P. 11
24V POWER FROM FR JCT PANEL 24V JCT BLOCK SEE P.1
AUX A/C SW.
LIQUID SOL.
LO-PRESS SW. 5-30 PSI
HI-PRESS SW. 320-245 PSI
A/C CLUTCH
TO RAD. FAN CLUTCH RLY RF1 & RF2 SEE P. 9
CHASSIS GROUND
PRODRIVER
A/C CONDENSER FAN
AUXILIARY A/C SYSTEM

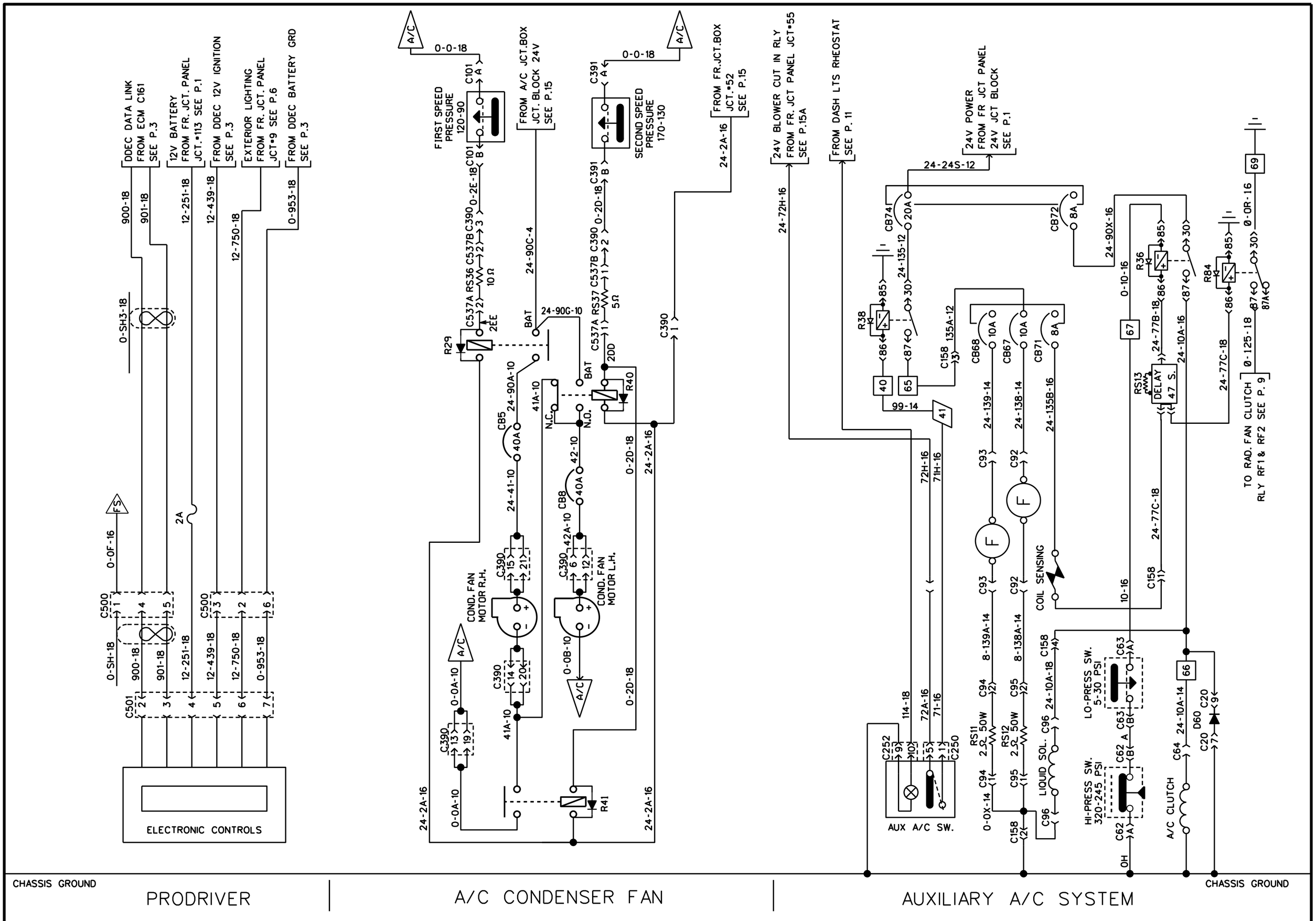

PREVOST CAR inc.	WIRING DIAGRAM	NO: D060872	P. 16	REVISION 033

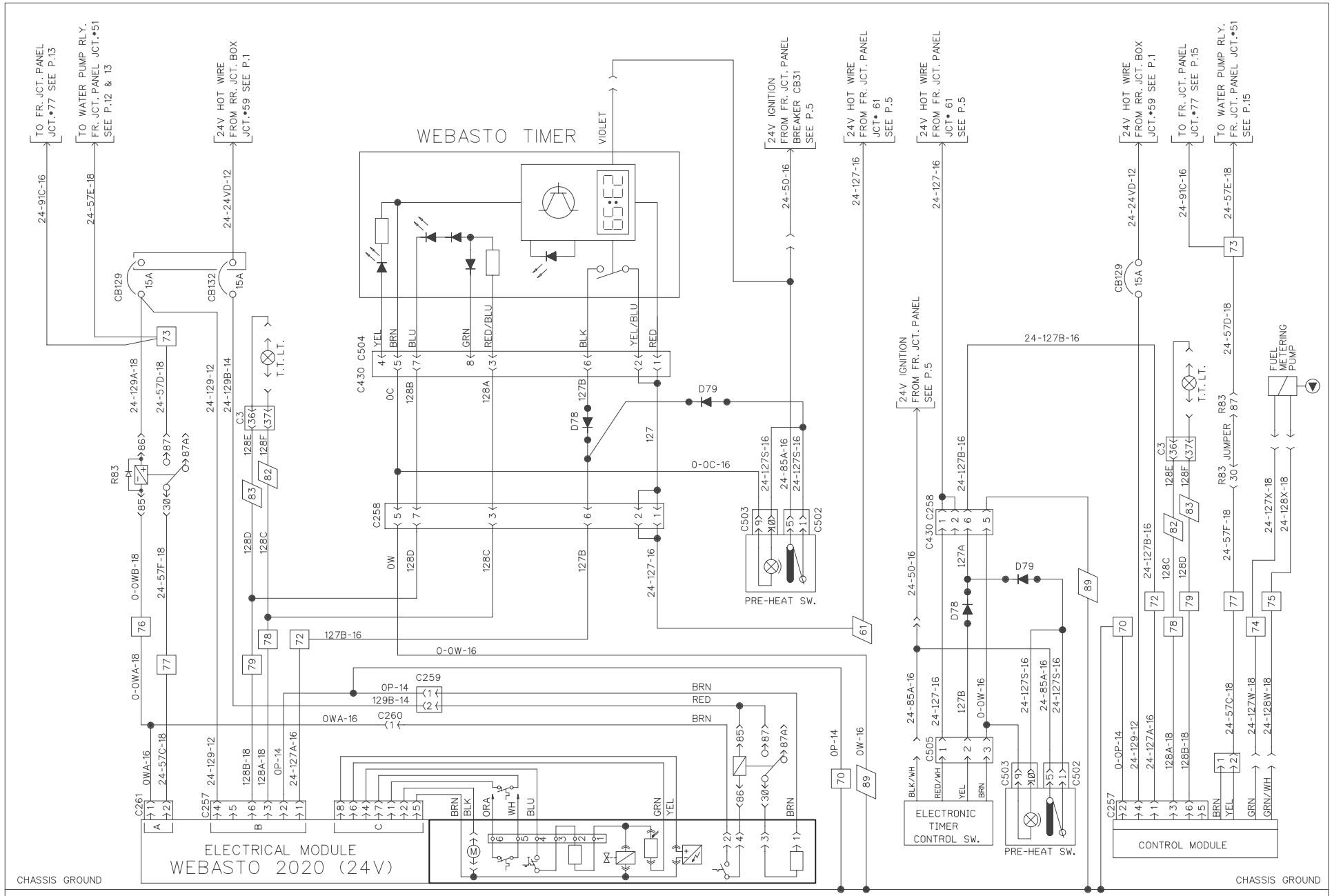

PRE-HEAT WATER HEATER WEBASTO 2020 | PRE-HEAT WATER HEATER ESPAR

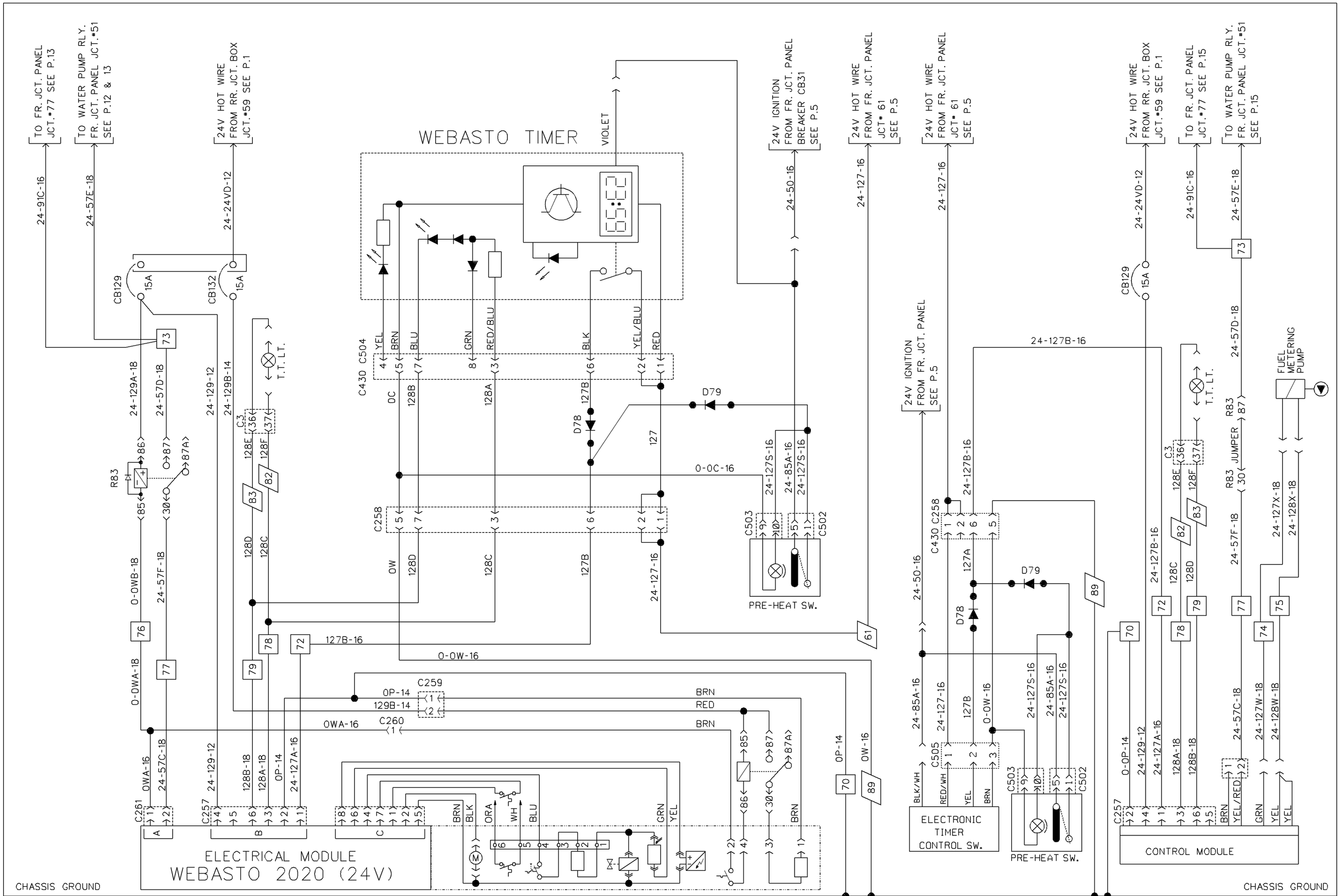

PRE-HEAT WATER HEATER WEBASTO 2020 | PRE-HEAT WATER HEATER ESPAR

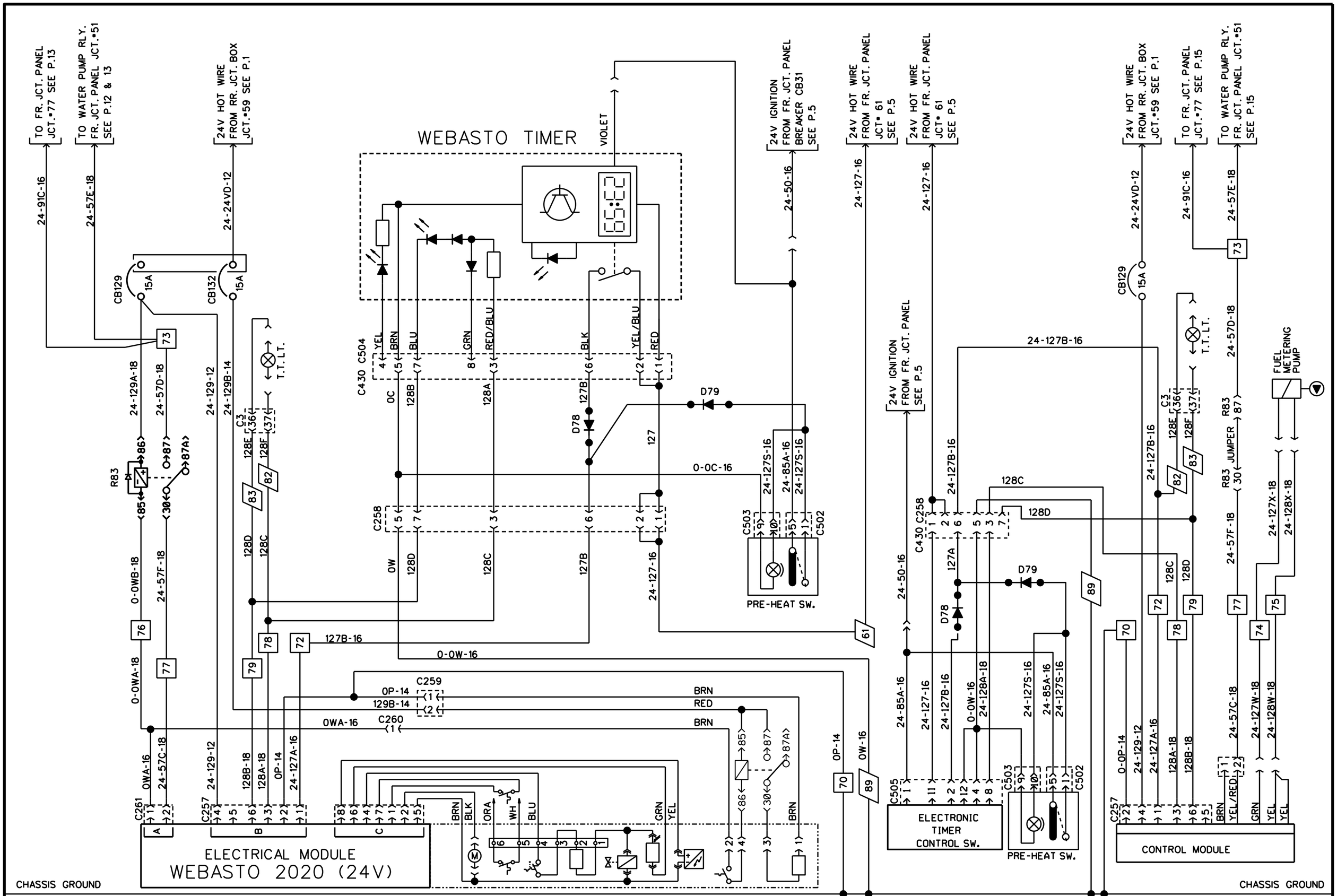

PRE-HEAT WATER HEATER WEBASTO 2020 | PRE-HEAT WATER HEATER ESPAR

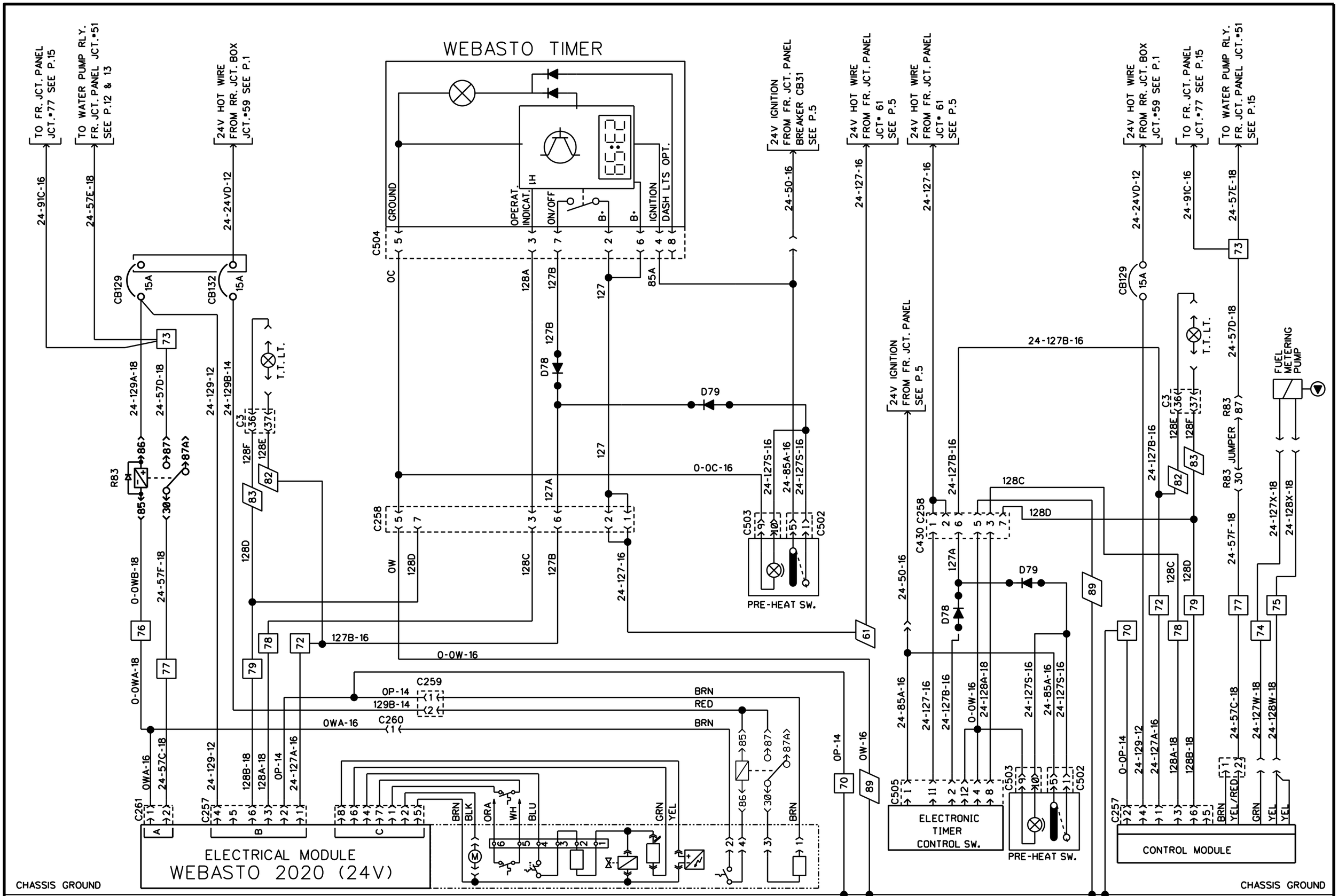

PREVOST CAR inc.	WIRING DIAGRAM	NO: D060872	P. 17	REVISION 025

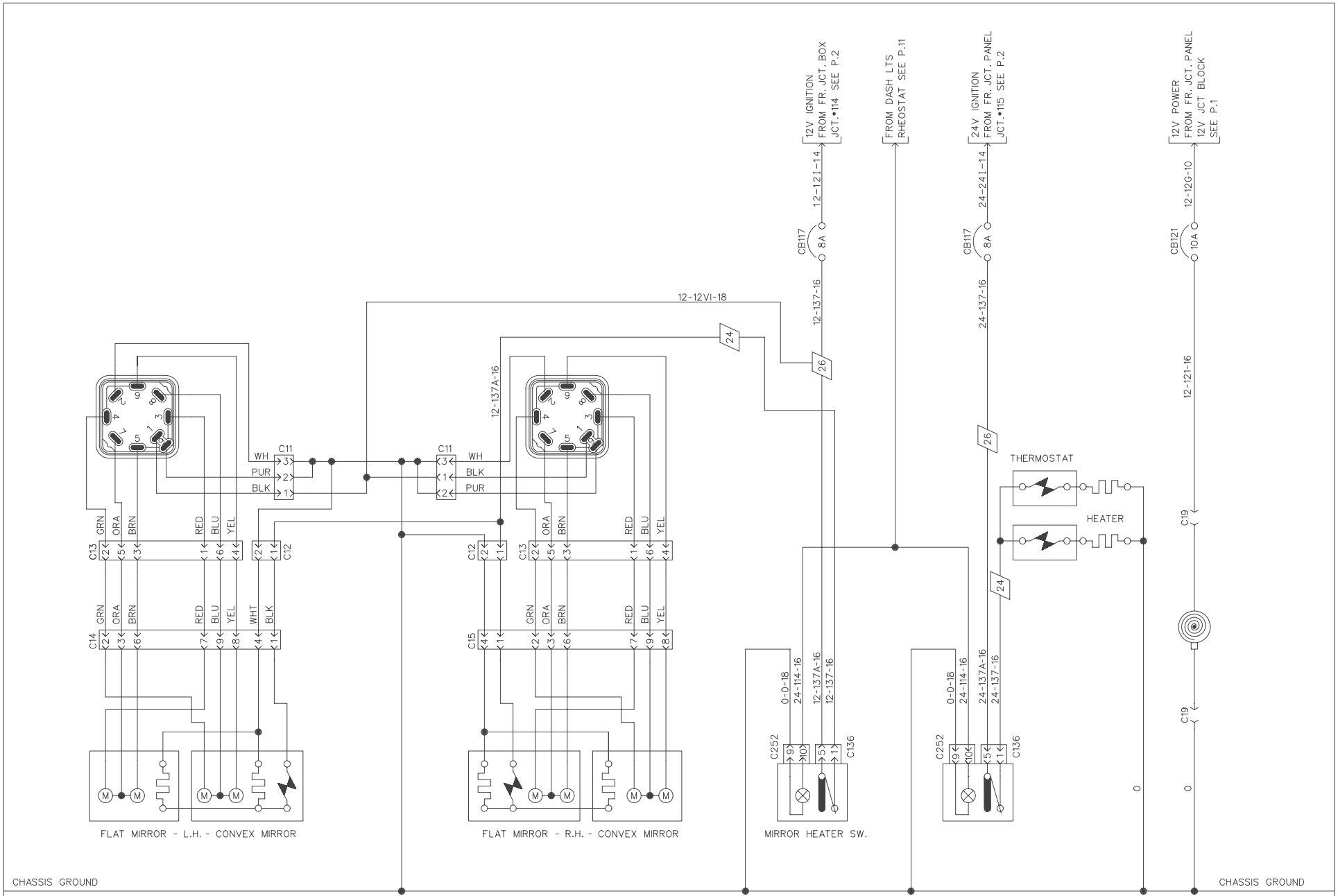

PREVOST CAR inc.	WIRING DIAGRAM	NO: D060872	P. 18	PRIOR	REVISION 000

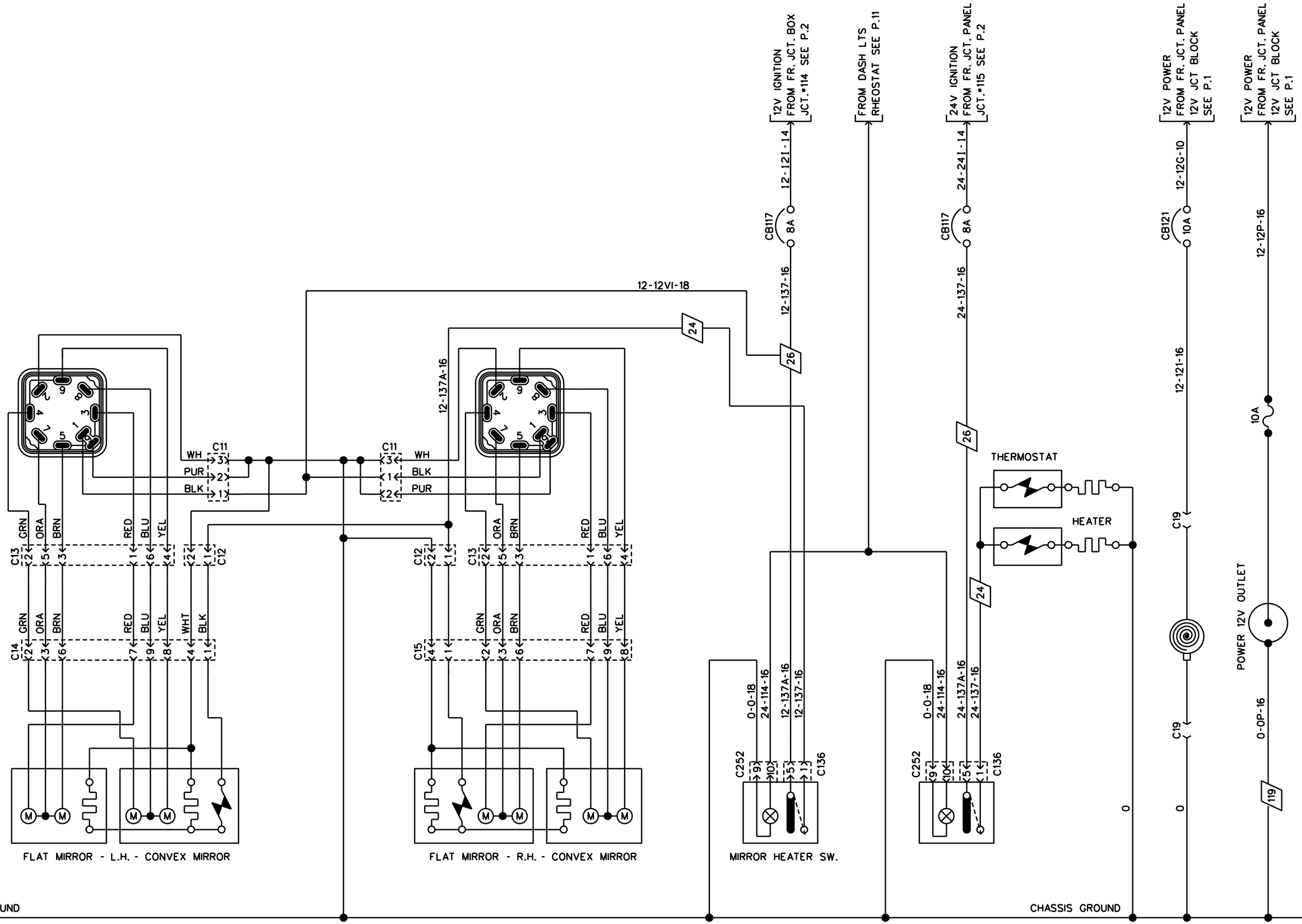

REAR VIEW MIRROR - ADJUSTMENT & HEATER SW. (RAMCO) | MIRROR (IKI) | CIGAR LIGHTER | POWER 12V OUTLET

PREVOST CAR inc.	WIRING DIAGRAM	NO: D060872	P. 18	REVISION 001

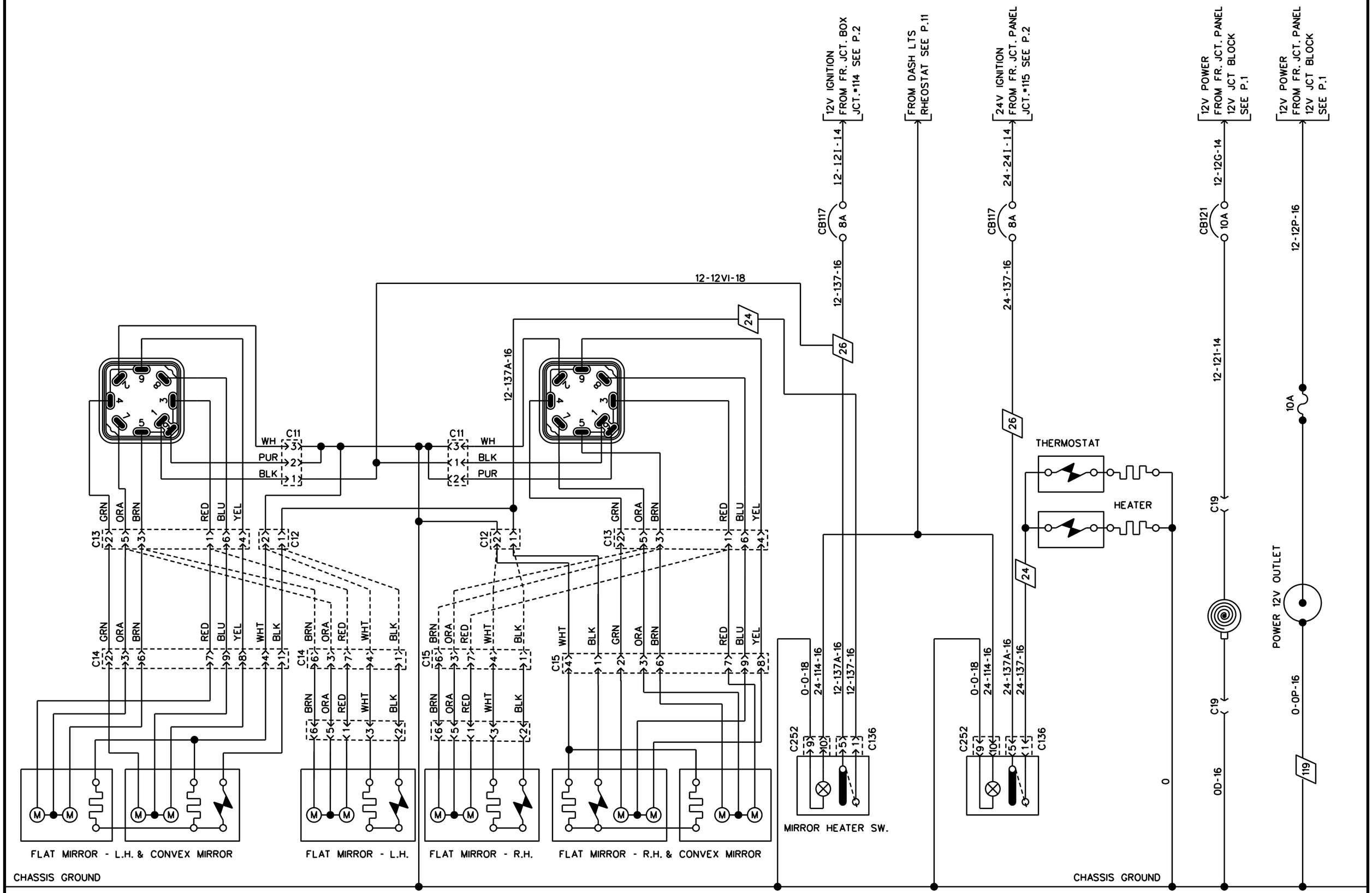

REAR VIEW MIRROR - ADJUSTMENT & HEATER SW. (RAMCO) | MIRROR (IKI) | CIGAR LIGHTER | POWER 12V OUTLET

PREVOST CAR inc.	WIRING DIAGRAM	NO: D060872	P. 18	REVISION 028

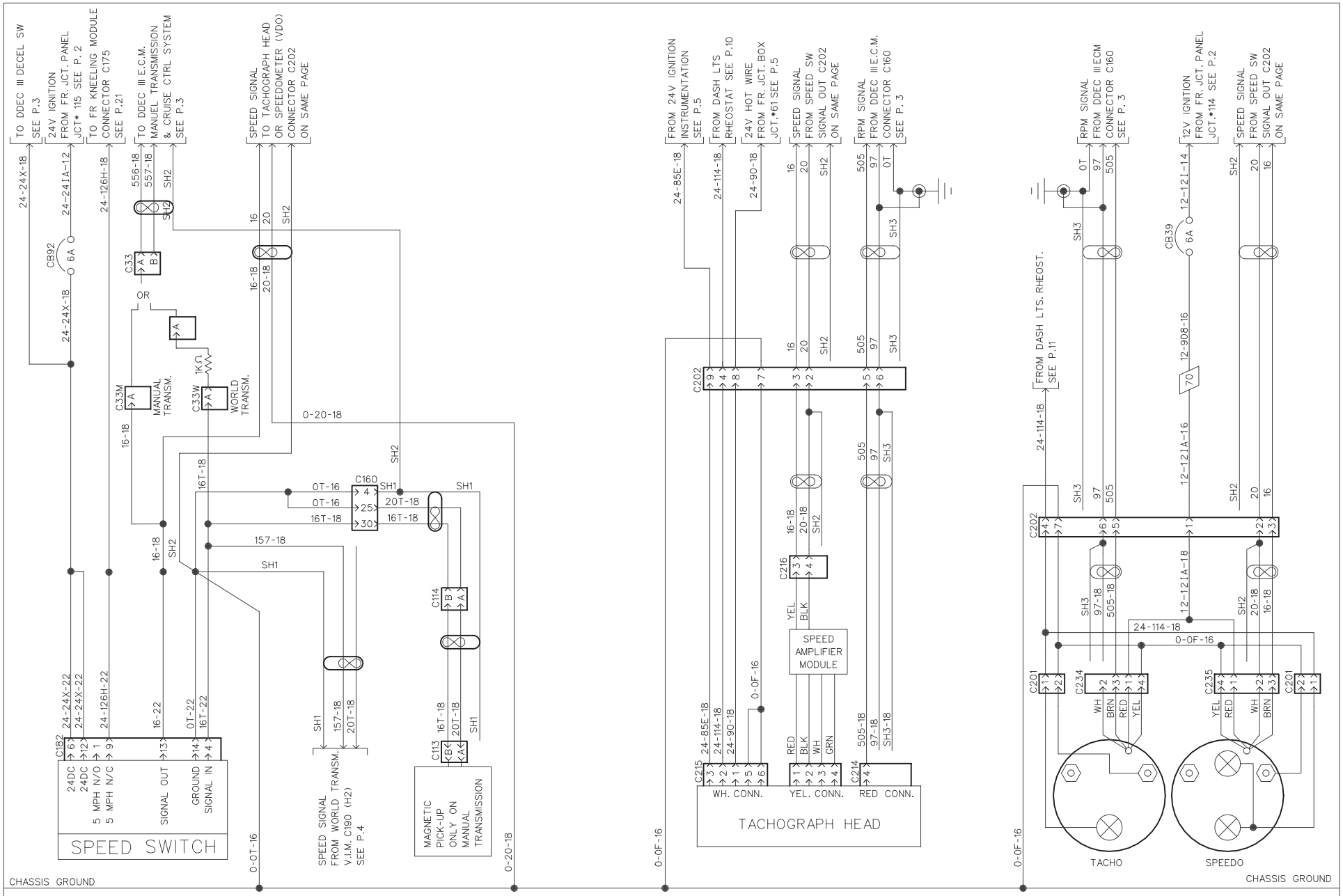

SPEED SIGNAL | ELECTRONIC TACHOGRAPH ELECT III | TACHO. & SPEEDO. VDO

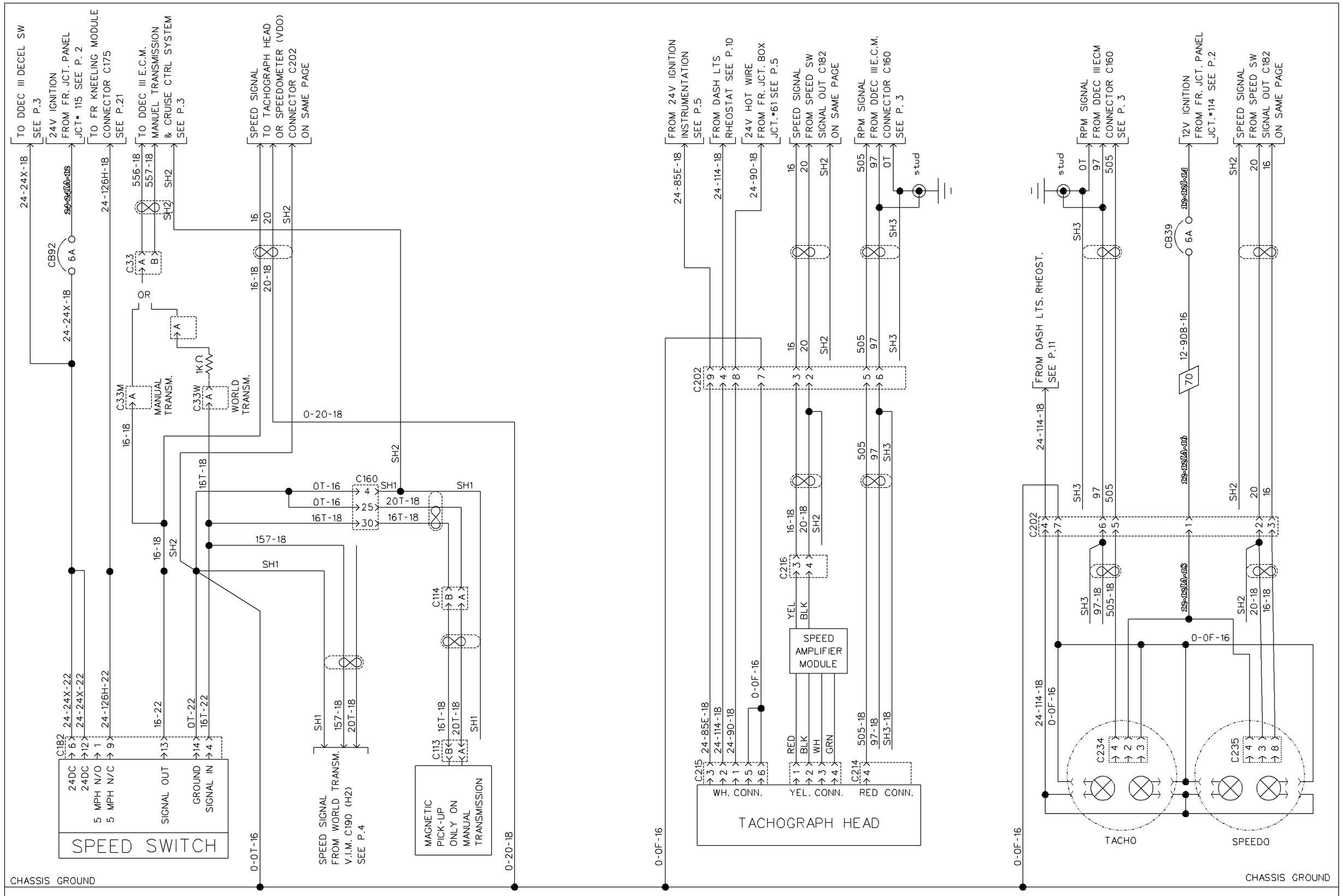

SPEED SIGNAL | ELECTRONIC TACHOGRAPH ELECT III | TACHO. & SPEEDO. VDO

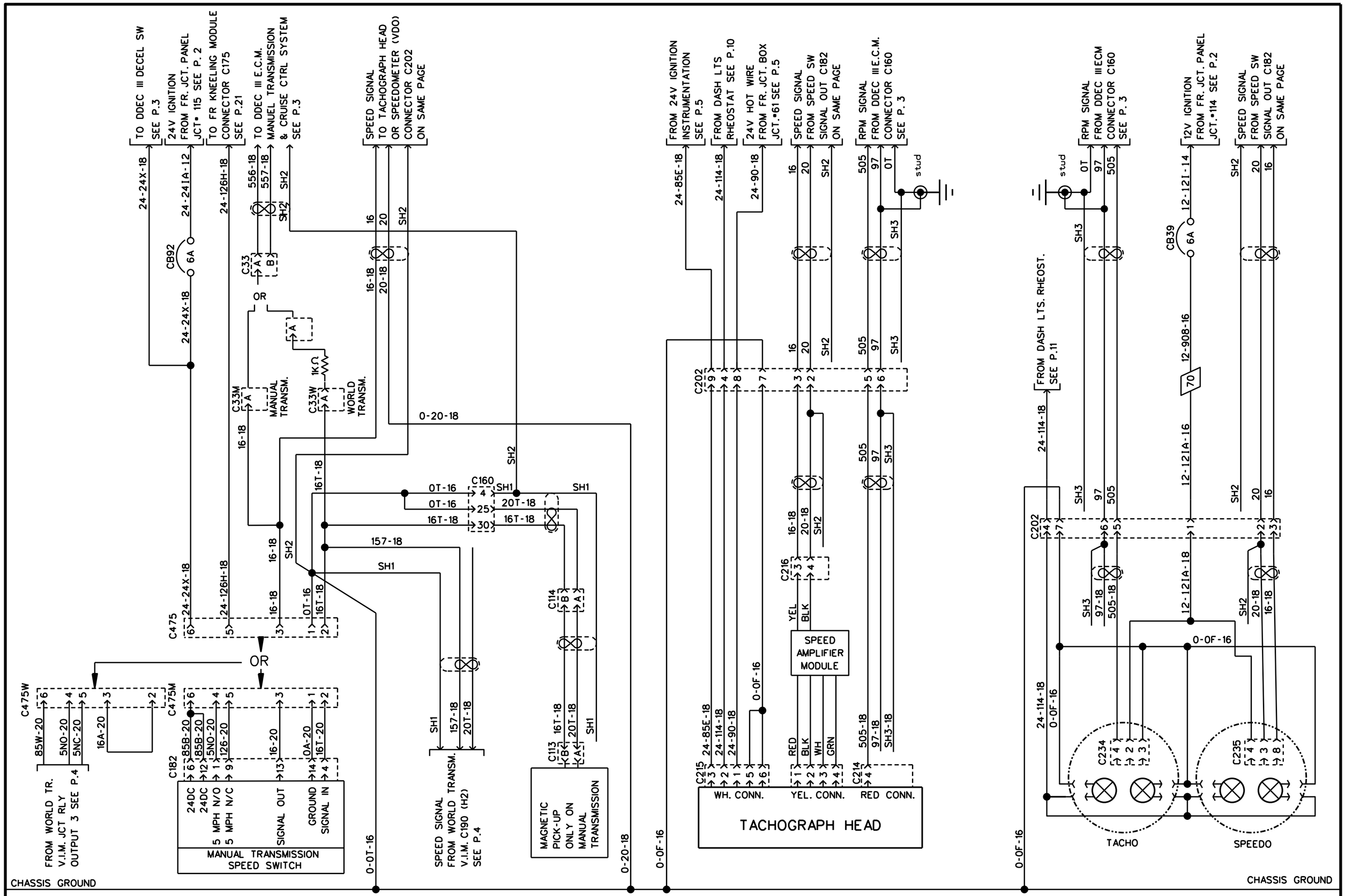

PREVOST CAR inc.	WIRING DIAGRAM	NO: D060872	P. 19	REVISION 013

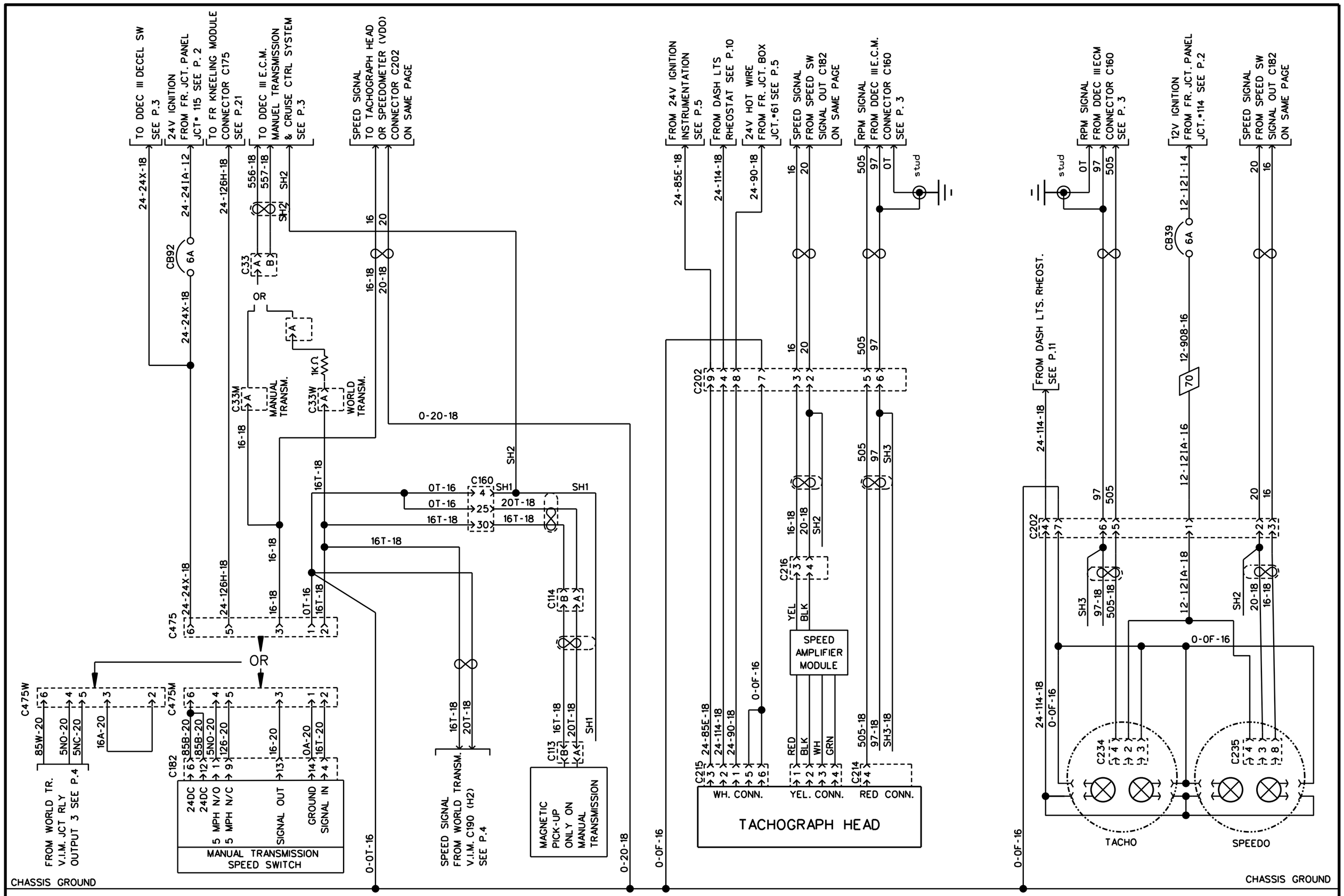

SPEED SIGNAL | ELECTRONIC TACHOGRAPH ELECT III | TACHO. & SPEEDO. VDO

PREVOST CAR inc.	WIRING DIAGRAM	NO: D060872	P. 19	REVISION 023

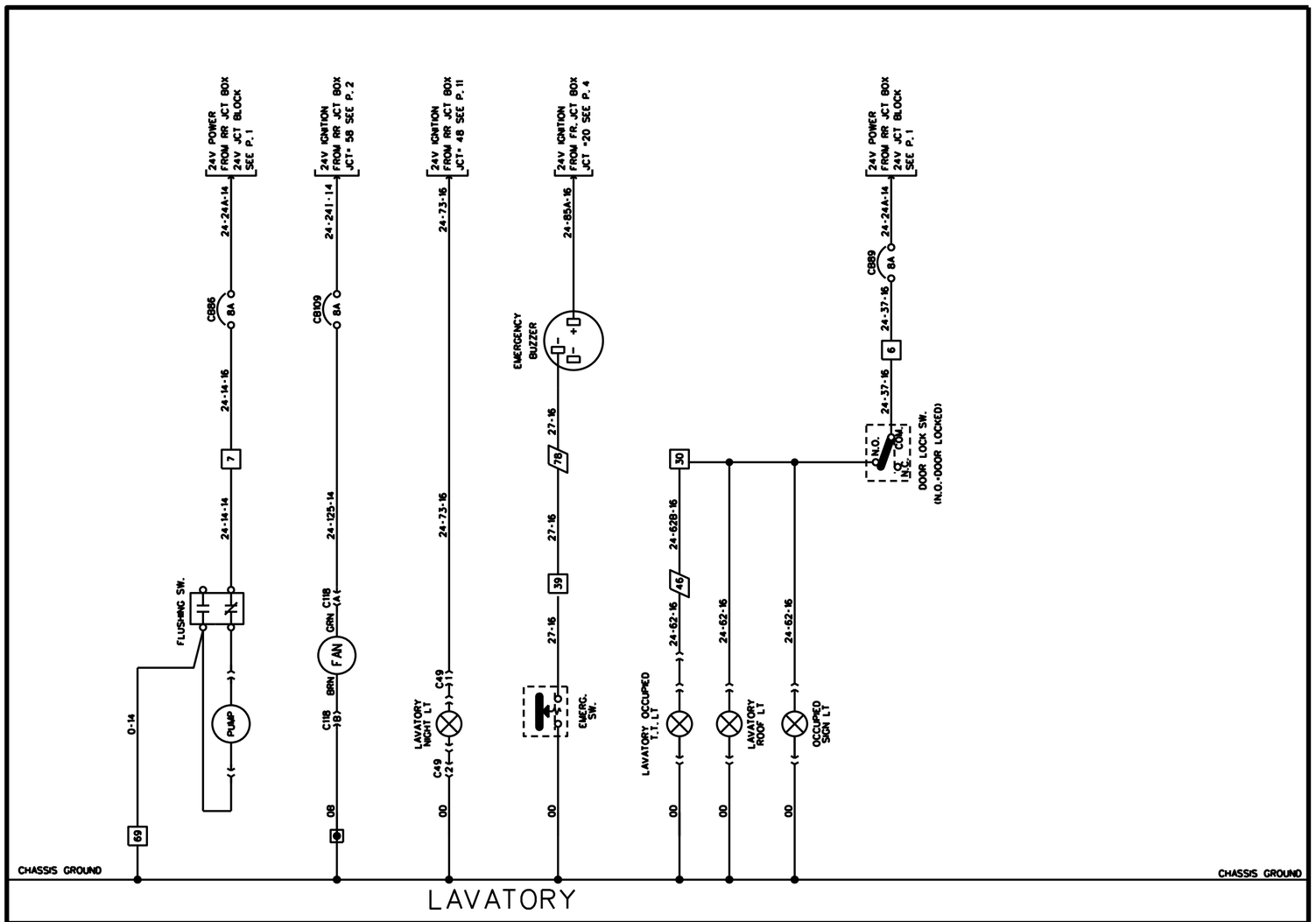

LAVATORY

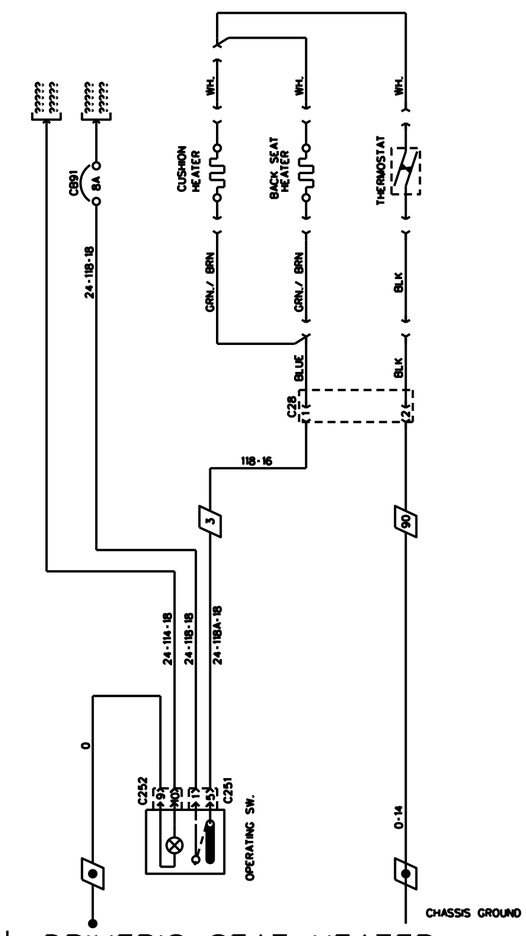

DRIVER'S SEAT HEATER

PREVOST CAR inc.	WIRING DIAGRAM	NO: D060872	P. 20	REVISION 025

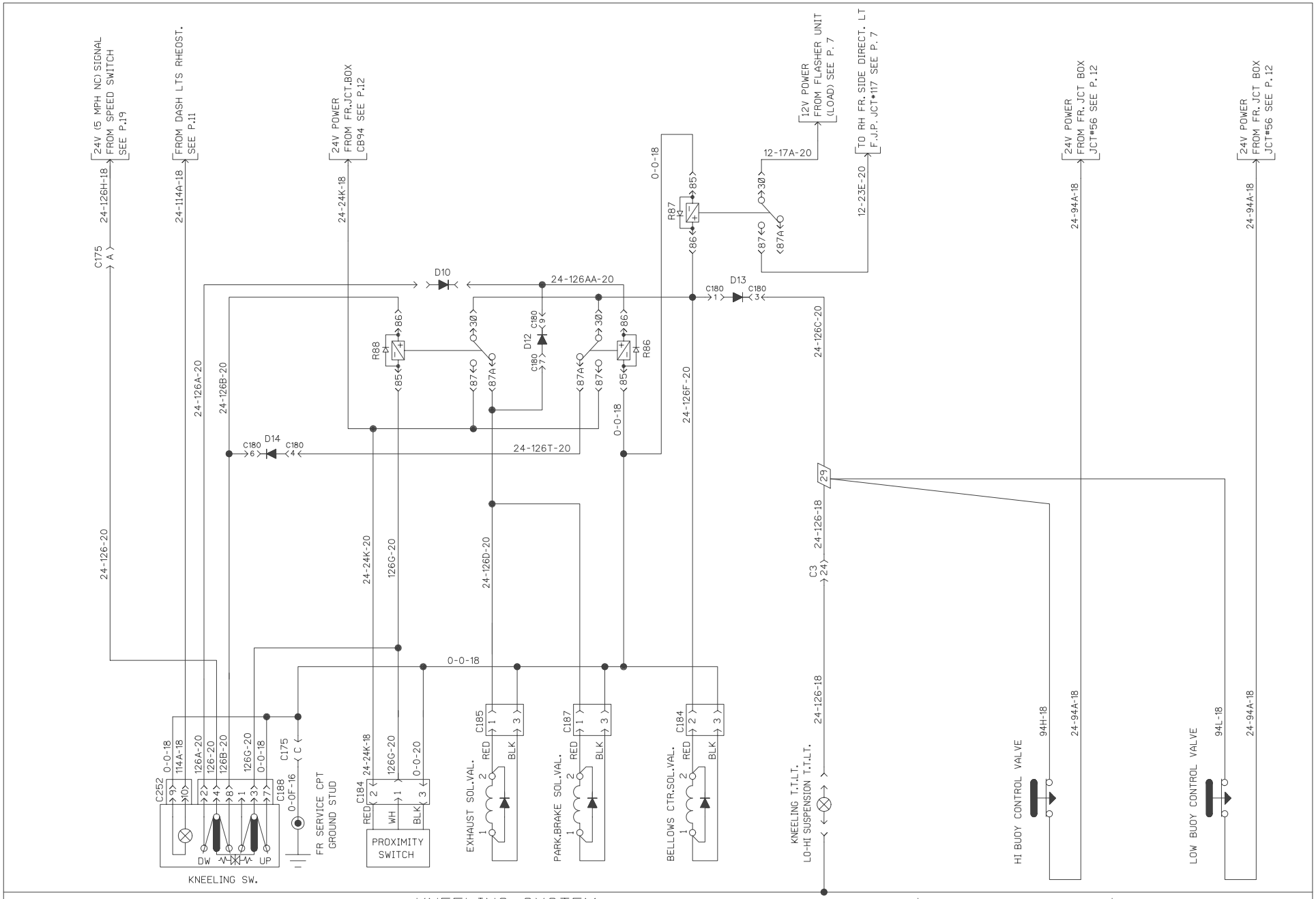

KNEELING SYSTEM | HI BUOY | LOW BUOY

PREVOST CAR inc. | WIRING DIAGRAM | NO: D060872 | P. 21 PRIOR | REVISION 000

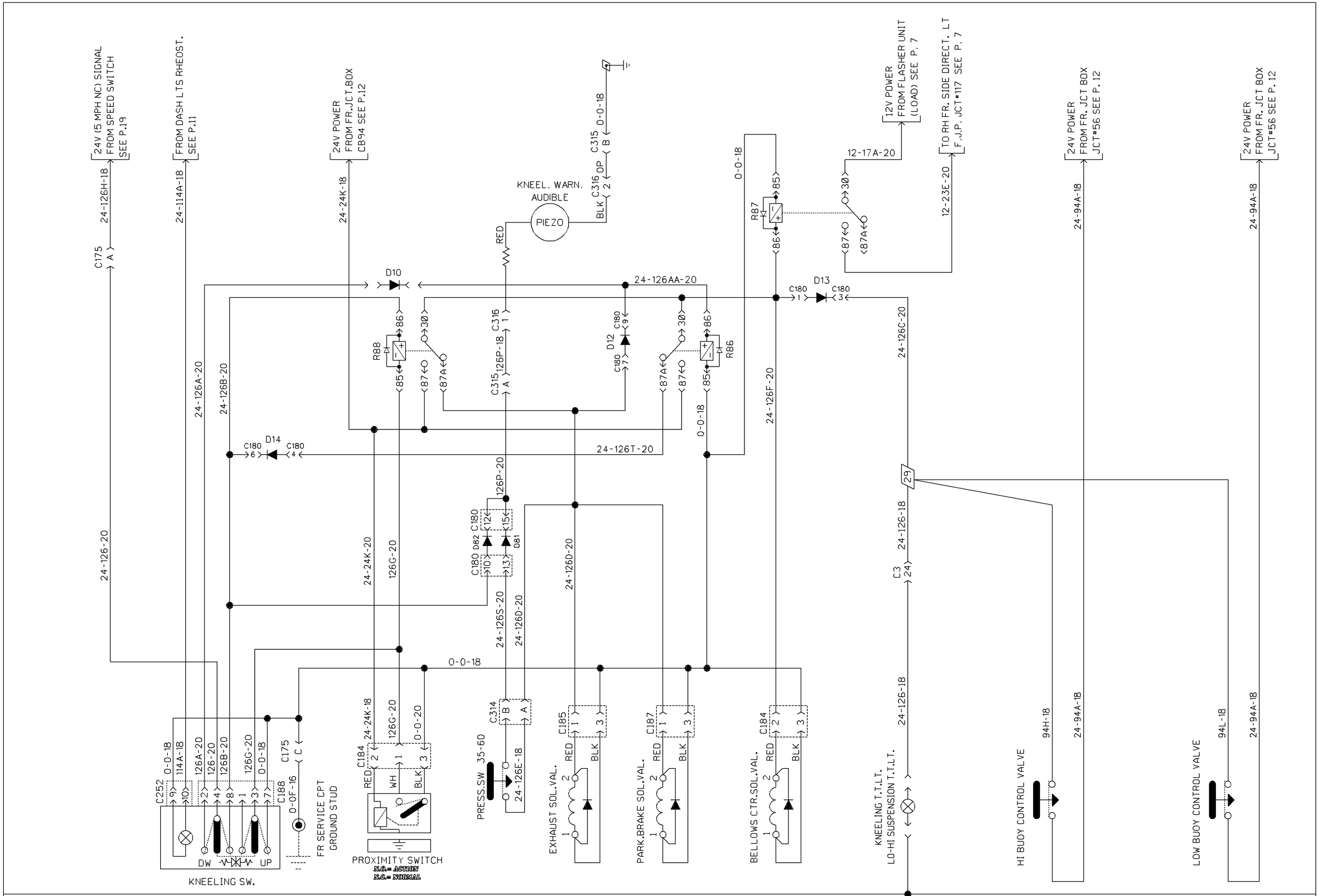

KNEELING SYSTEM | HI BUOY | LOW BUOY

PREVOST CAR inc. | WIRING DIAGRAM | NO: D060872 | P. 21 | REVISION 003

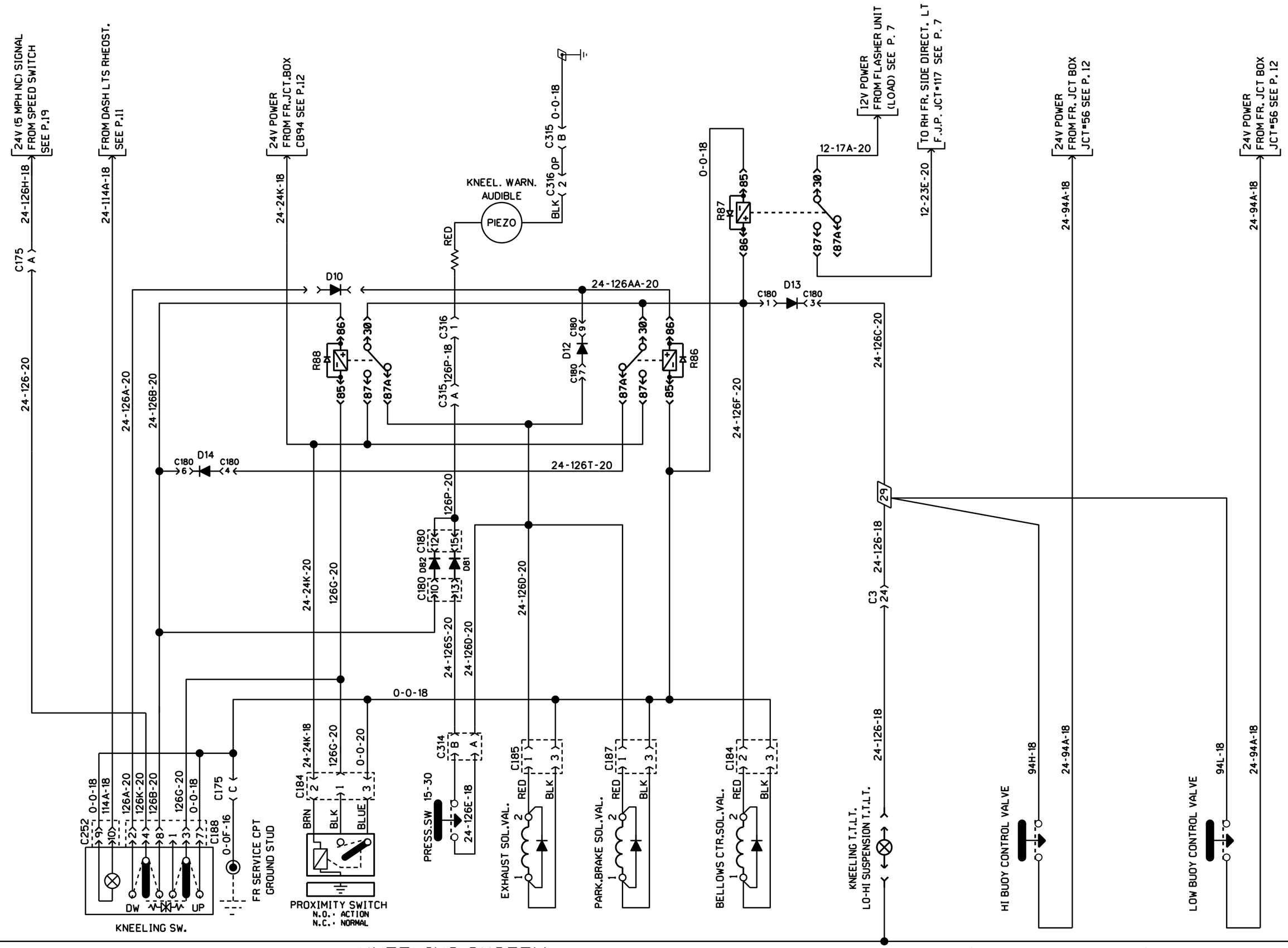

KNEELING SYSTEM | HI BUOY | LOW BUOY

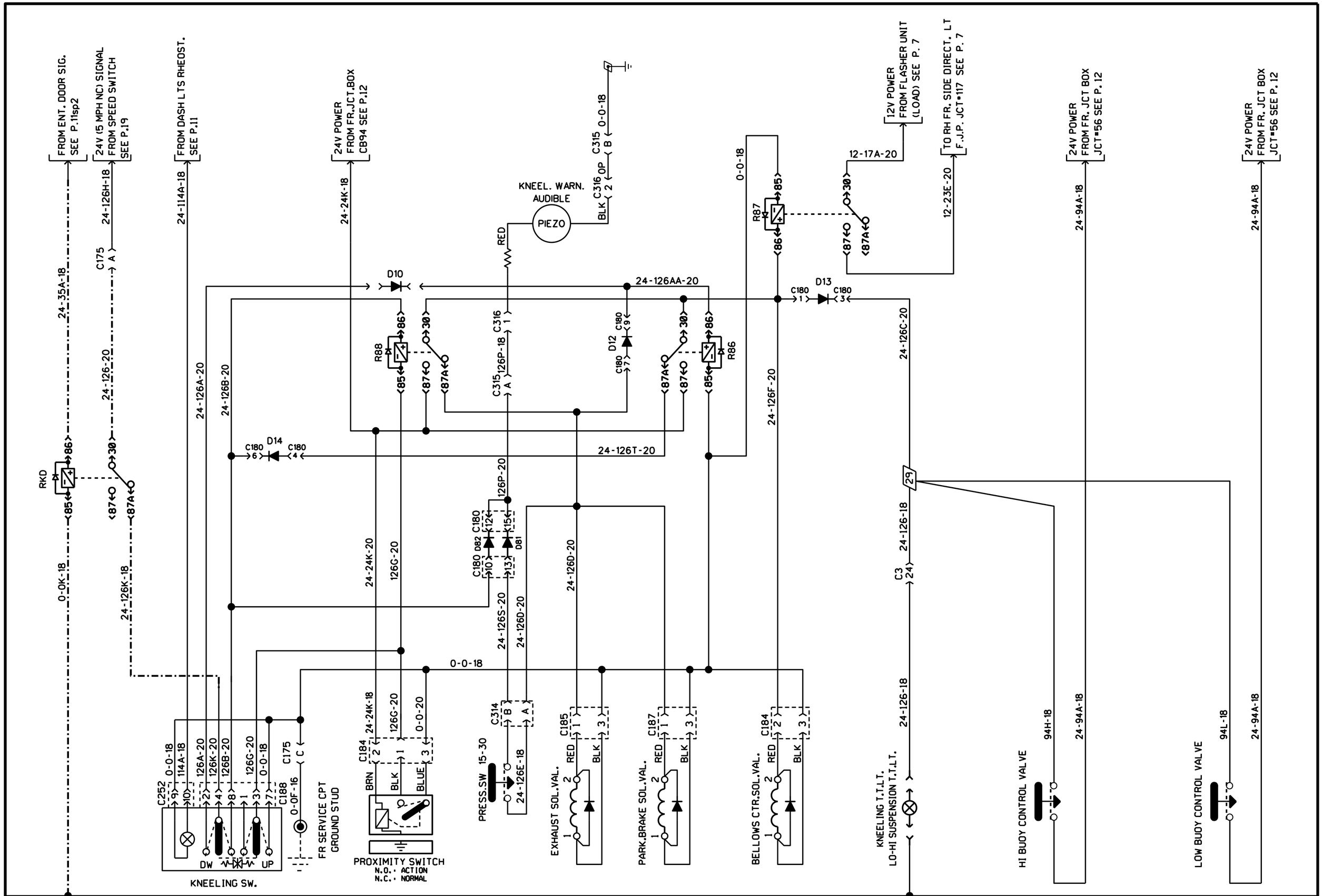

PREVOST CAR inc.	WIRING DIAGRAM	NO: D060872	P. 21sp1	REVISION 00

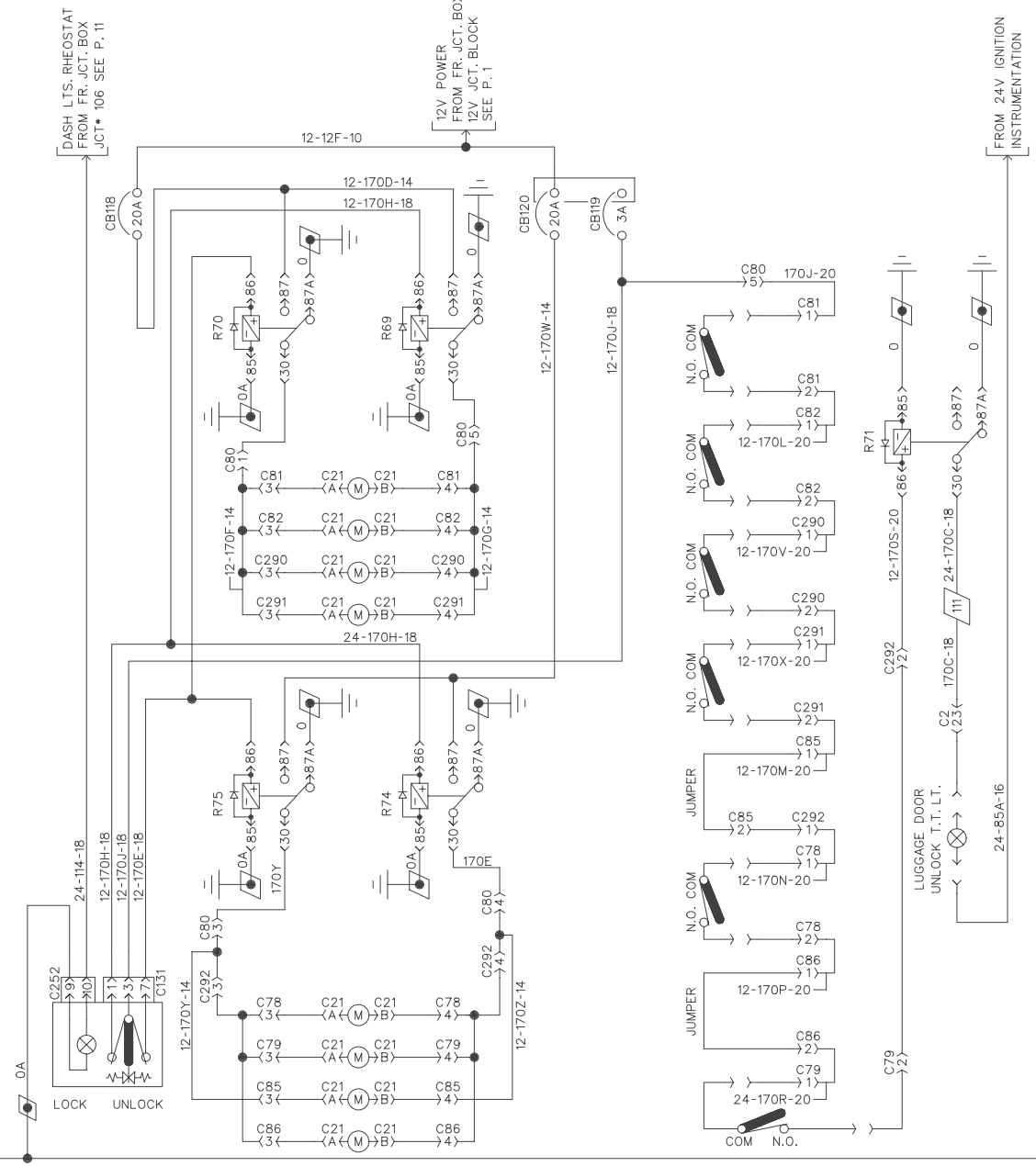

LUGGAGE DOOR LOCK.

PREVOST CAR inc.	WIRING DIAGRAM	NO: D060872	P. 22	REVISION 000

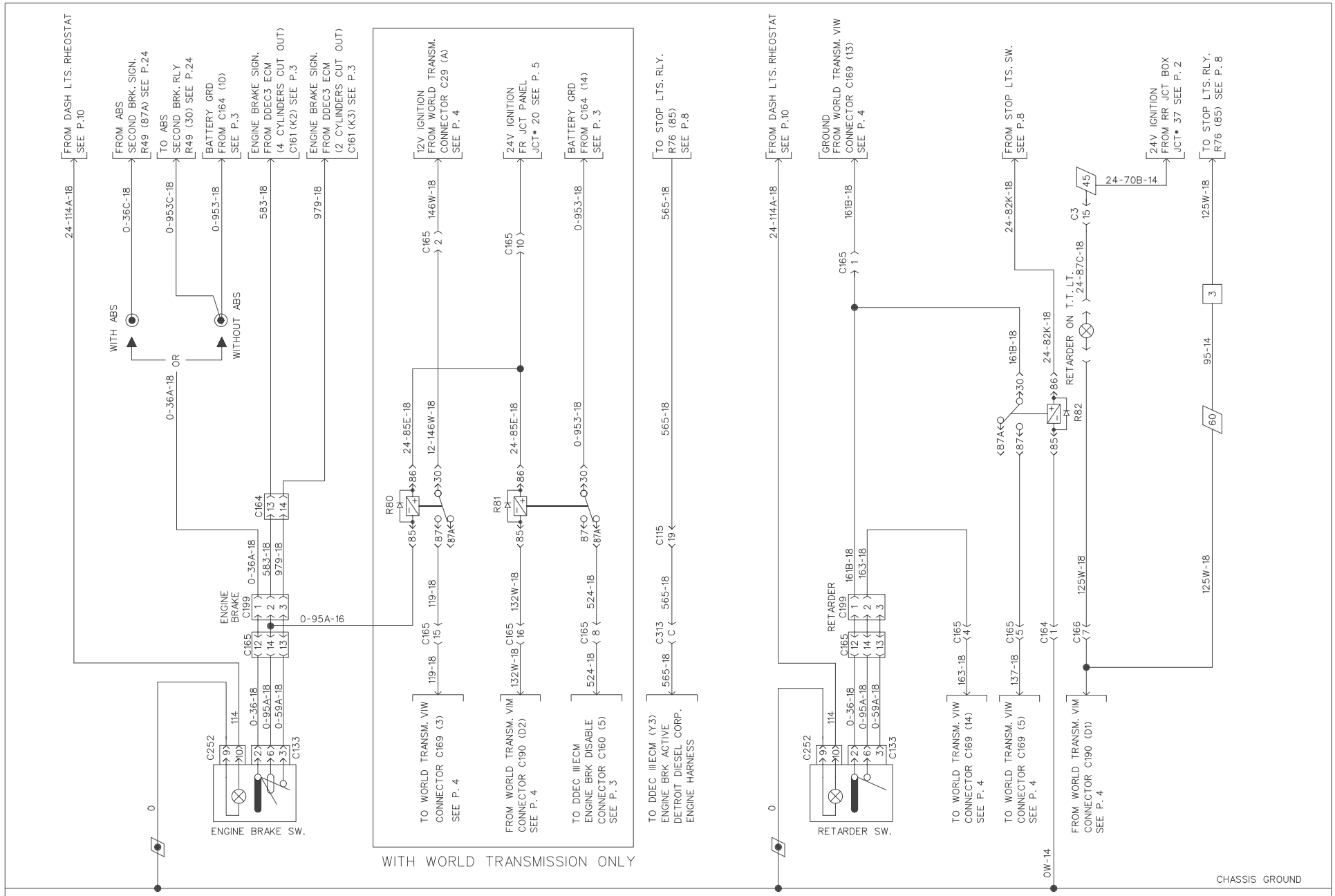

PREVOST CAR inc. | WIRING DIAGRAM | NO: D060872 | P. 23 | REVISION 000

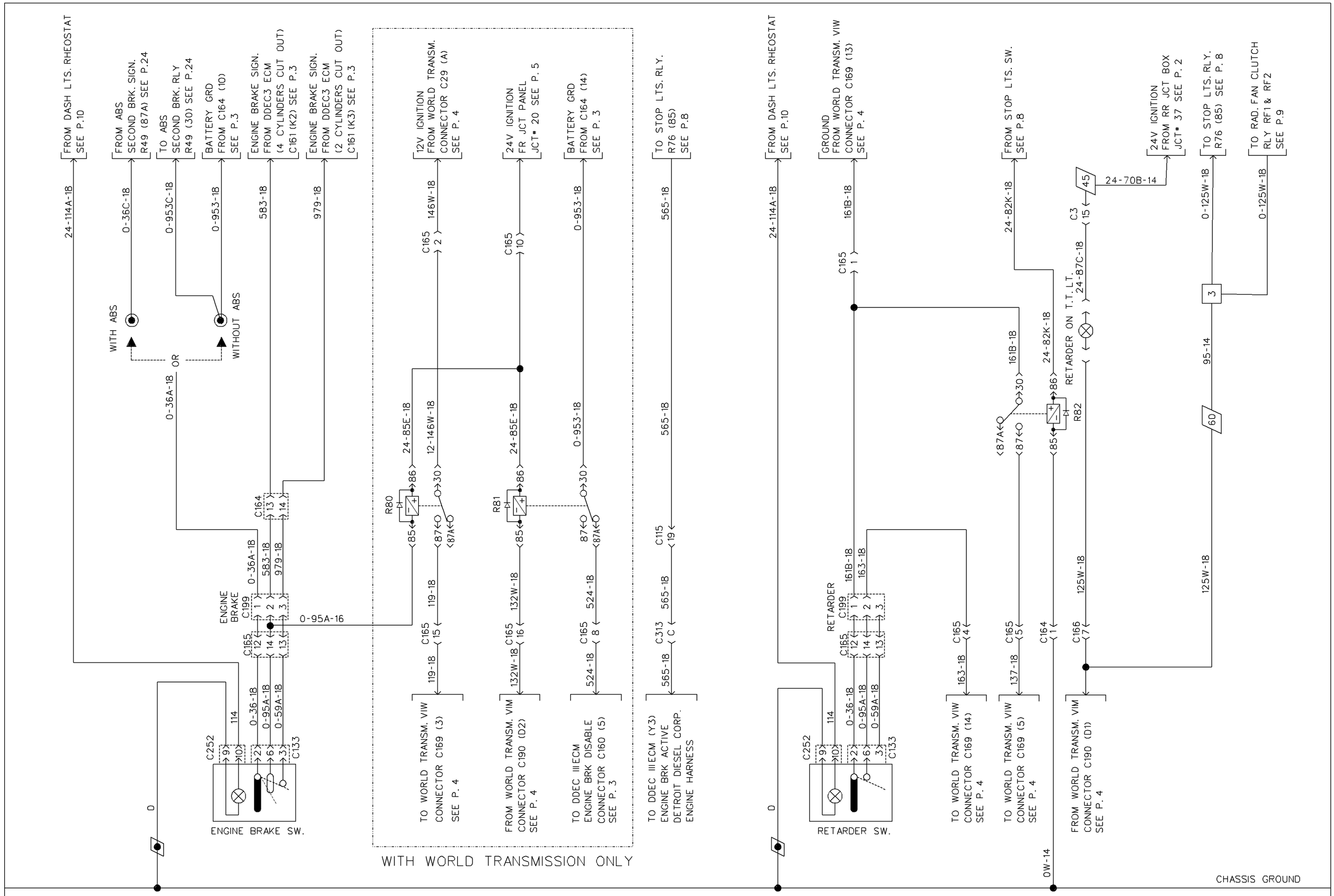

ENGINE BRAKE SYSTEM | RETARDER SYSTEM
(WORLD TRANSMISSION)

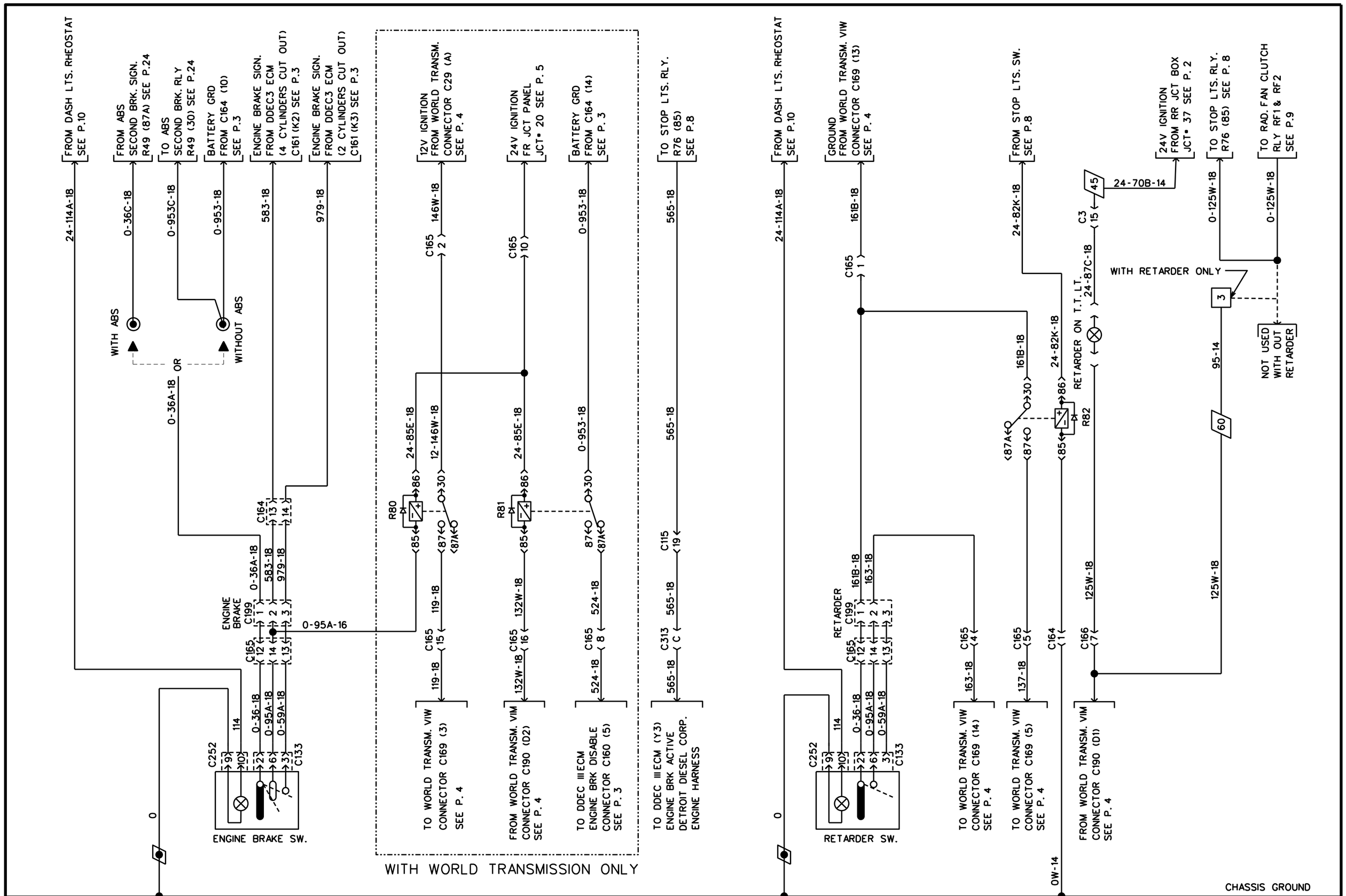

ENGINE BRAKE SYSTEM | RETARDER SYSTEM
(WORLD TRANSMISSION)

PREVOST CAR inc.	WIRING DIAGRAM	NO: D060872	P. 23	REVISION 019

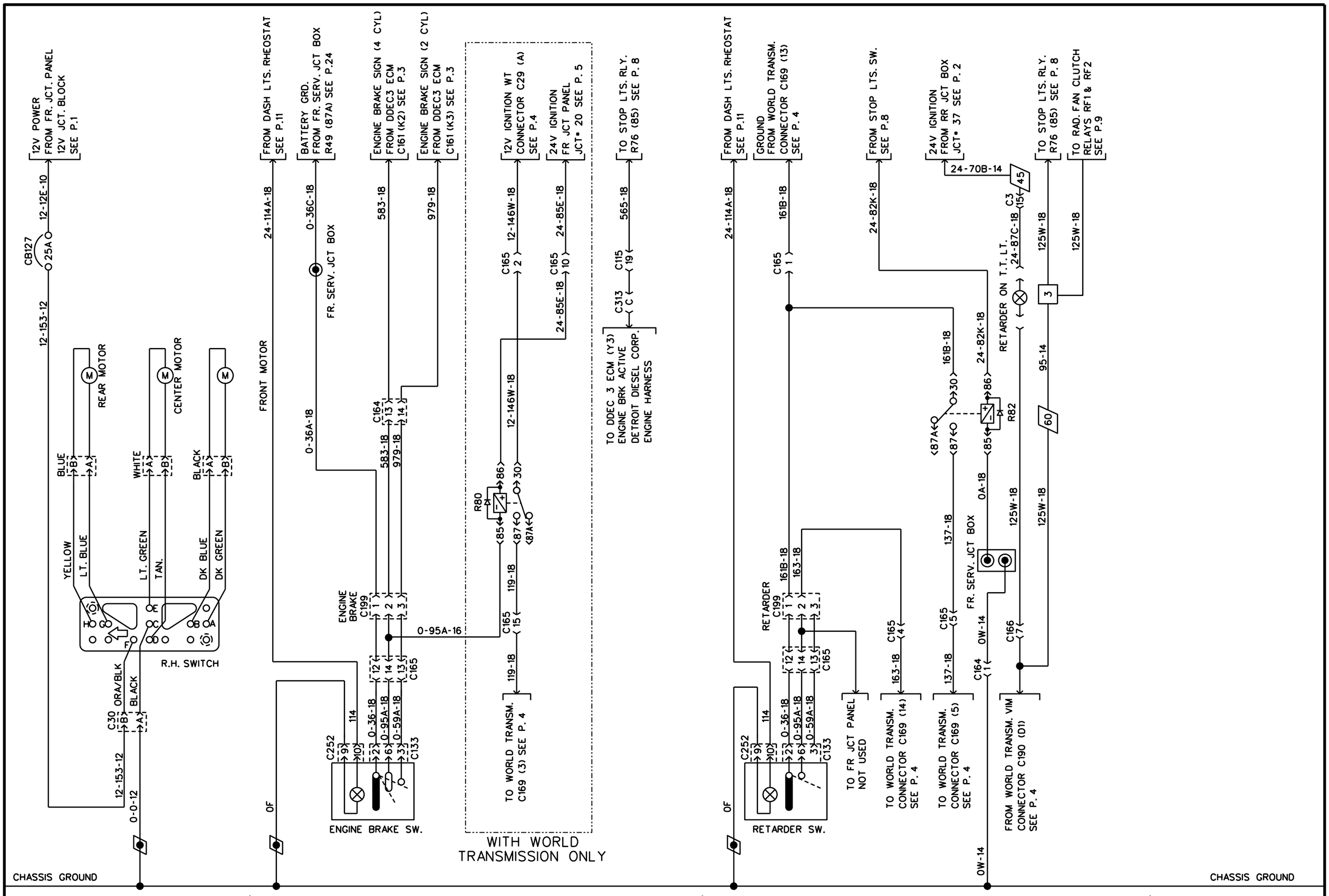

PREVOST CAR inc.	WIRING DIAGRAM	NO: D060872	P. 23	REVISION 023

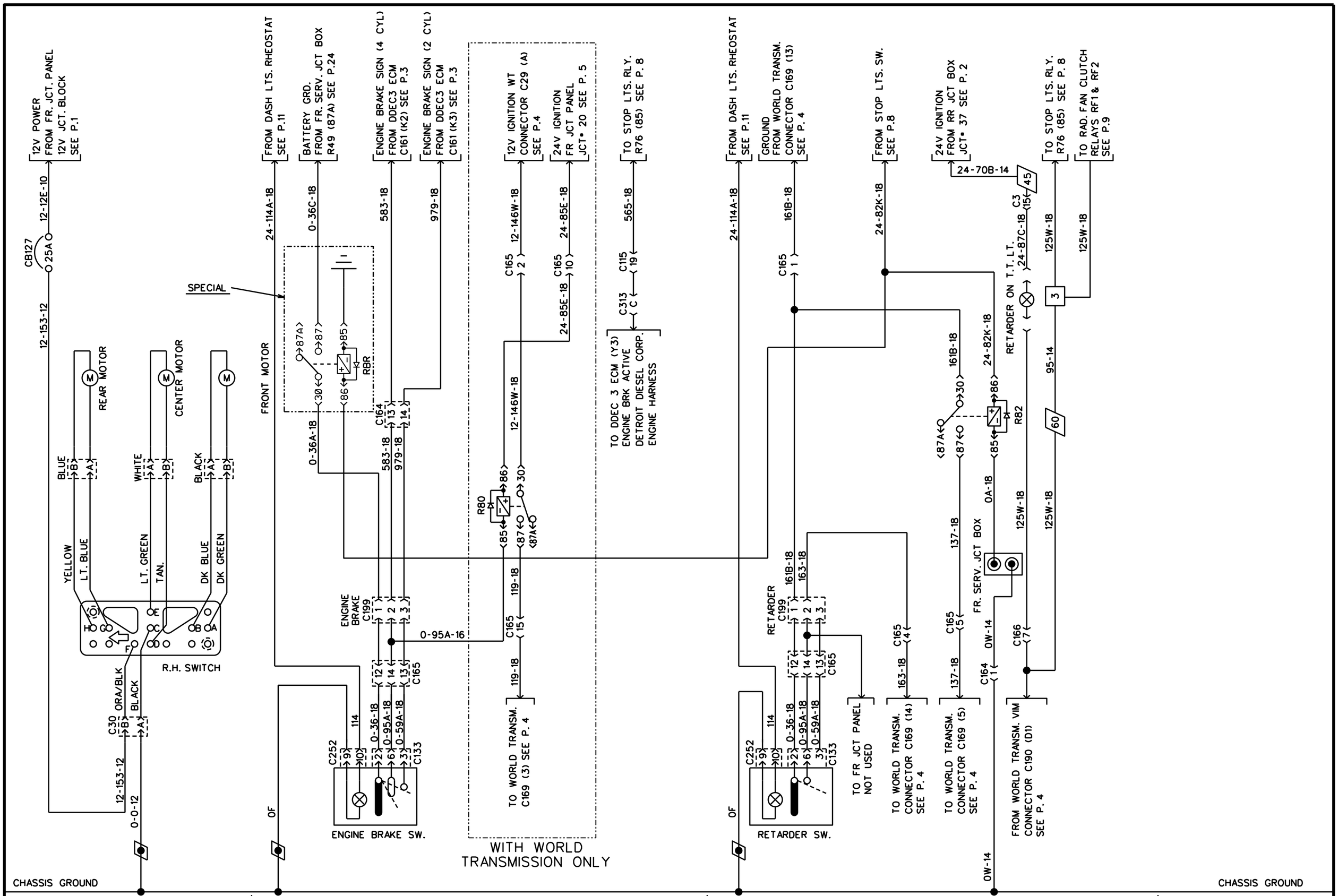

PREVOST CAR inc. | WIRING DIAGRAM | NO: D060872 | P.23 sp1 | REVISION 00

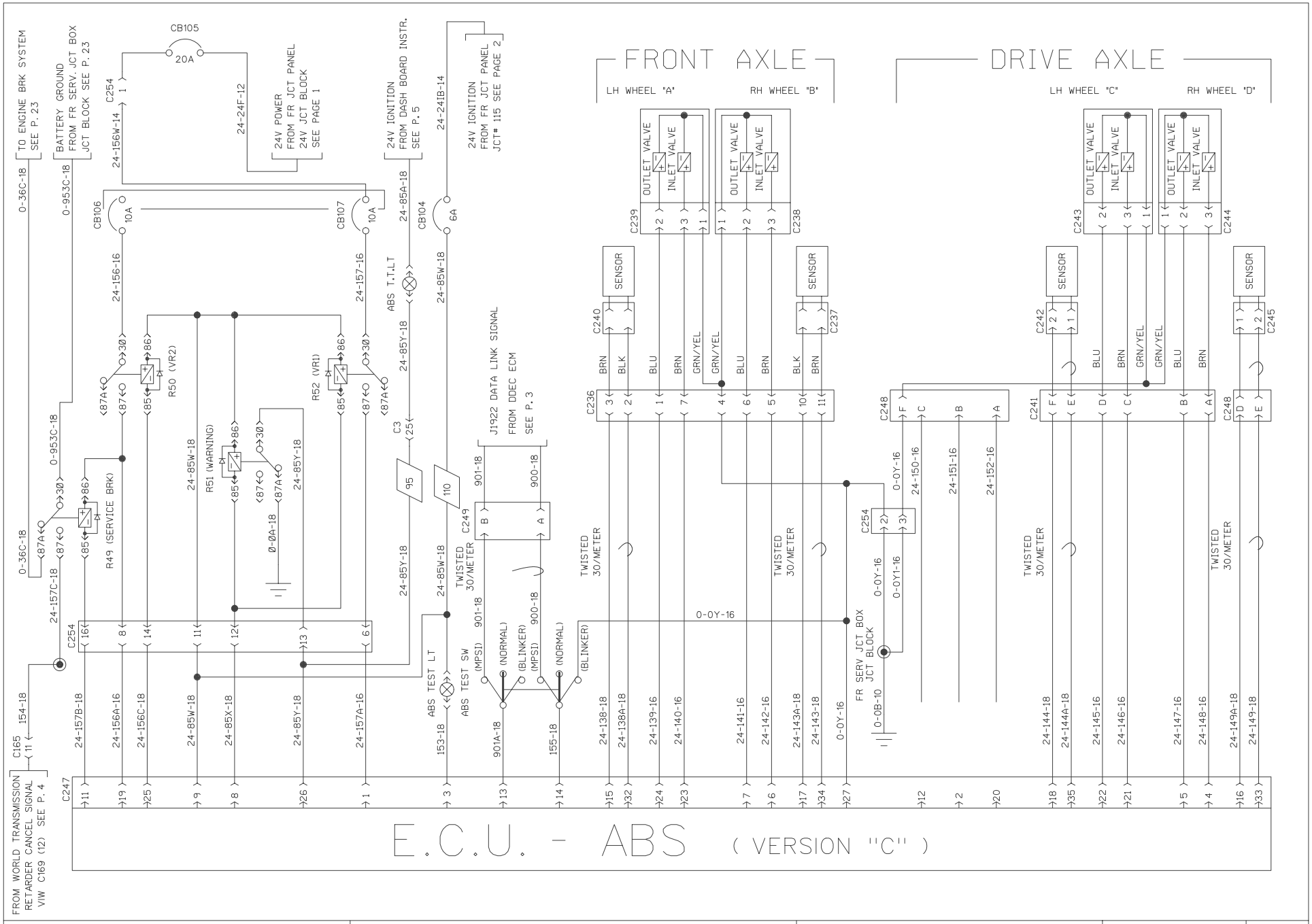

PREVOST CAR inc. | WIRING DIAGRAM | NO: D060872 | P. 24 | REVISION 000

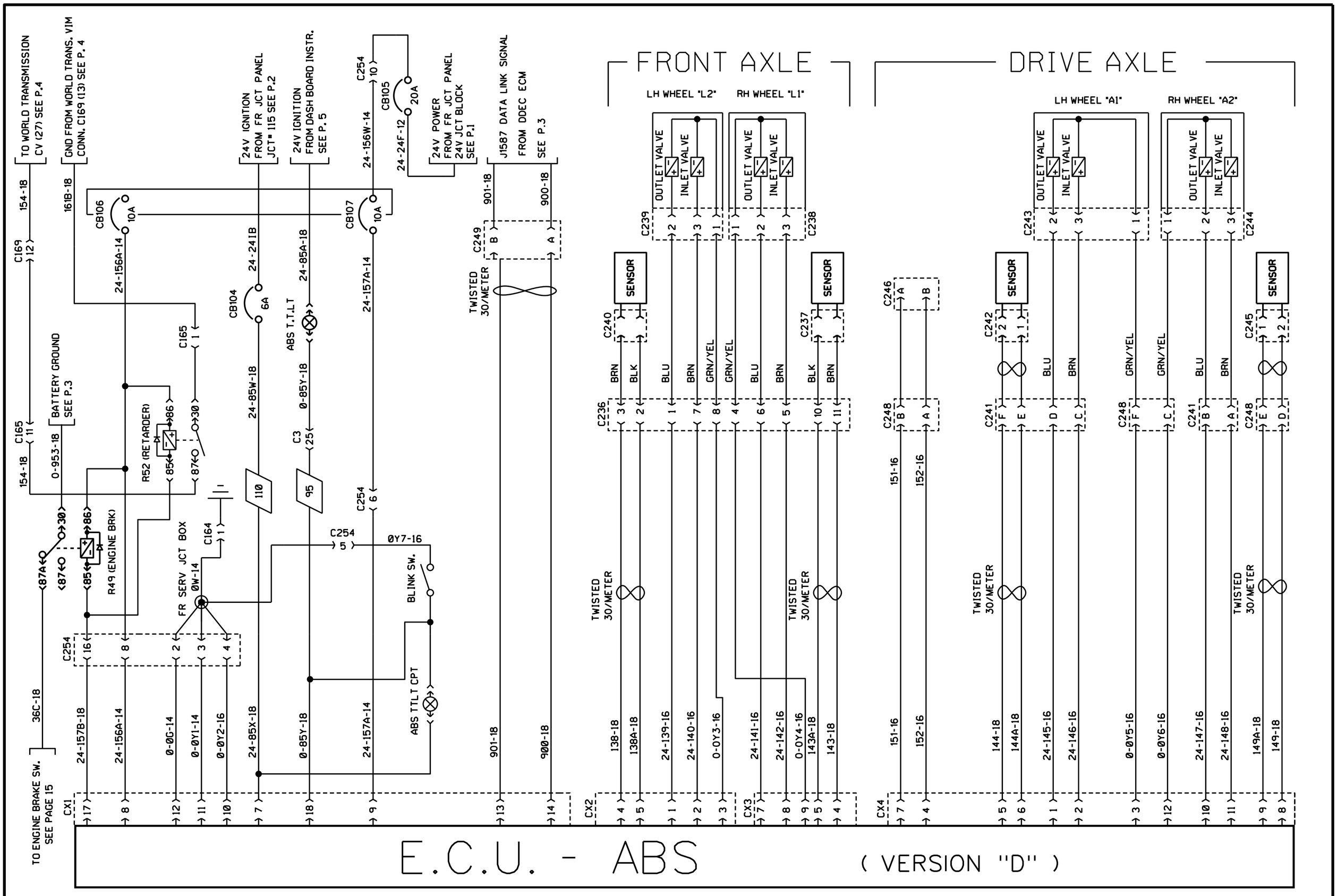

E.C.U. - ABS

(VERSION "D")

PREVOST	WIRING DIAGRAM	NO: D060872	PAGE: 24	REVISION 023

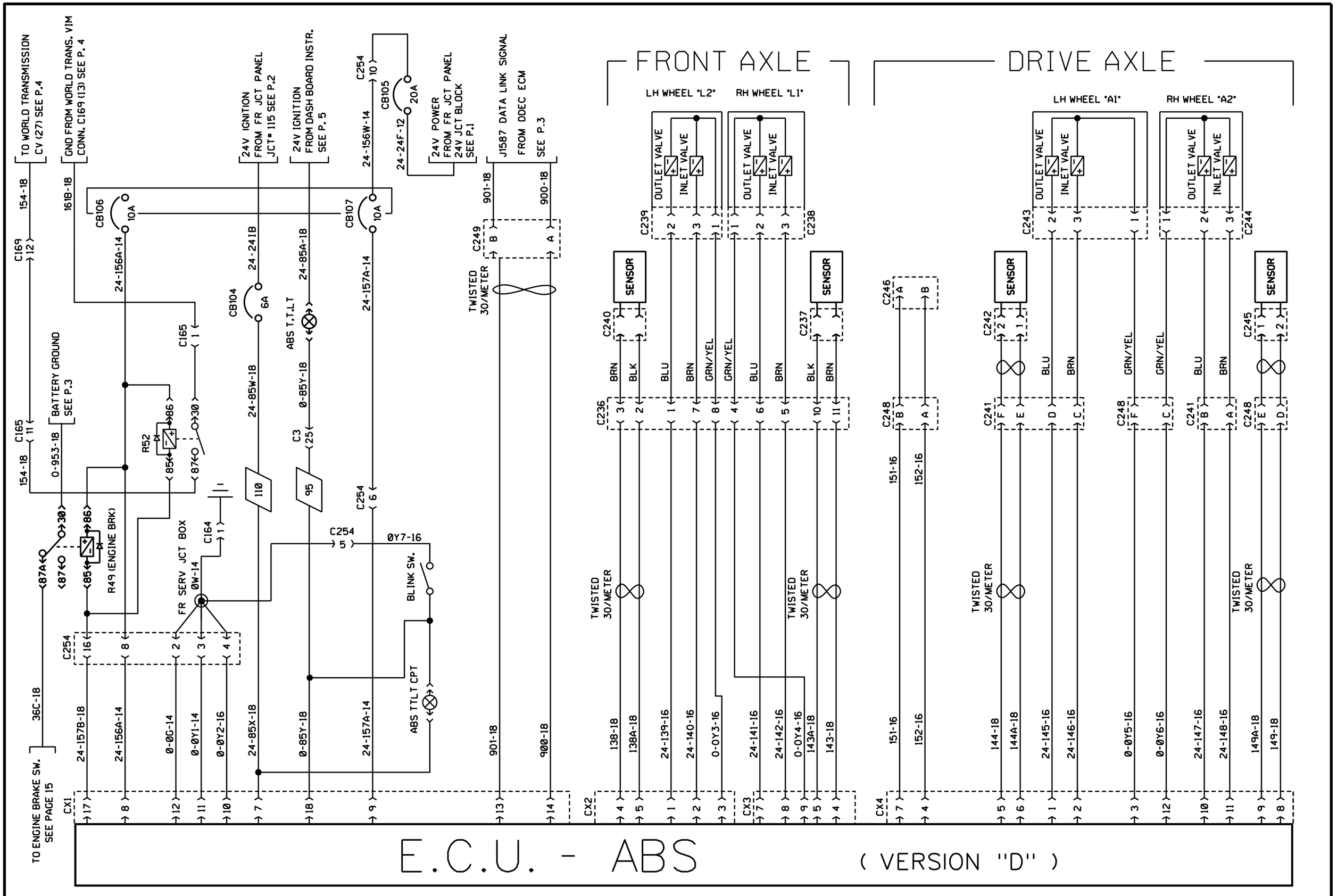

PREVOST	WIRING DIAGRAM	NO: D060872	PAGE: 24	REVISION 029

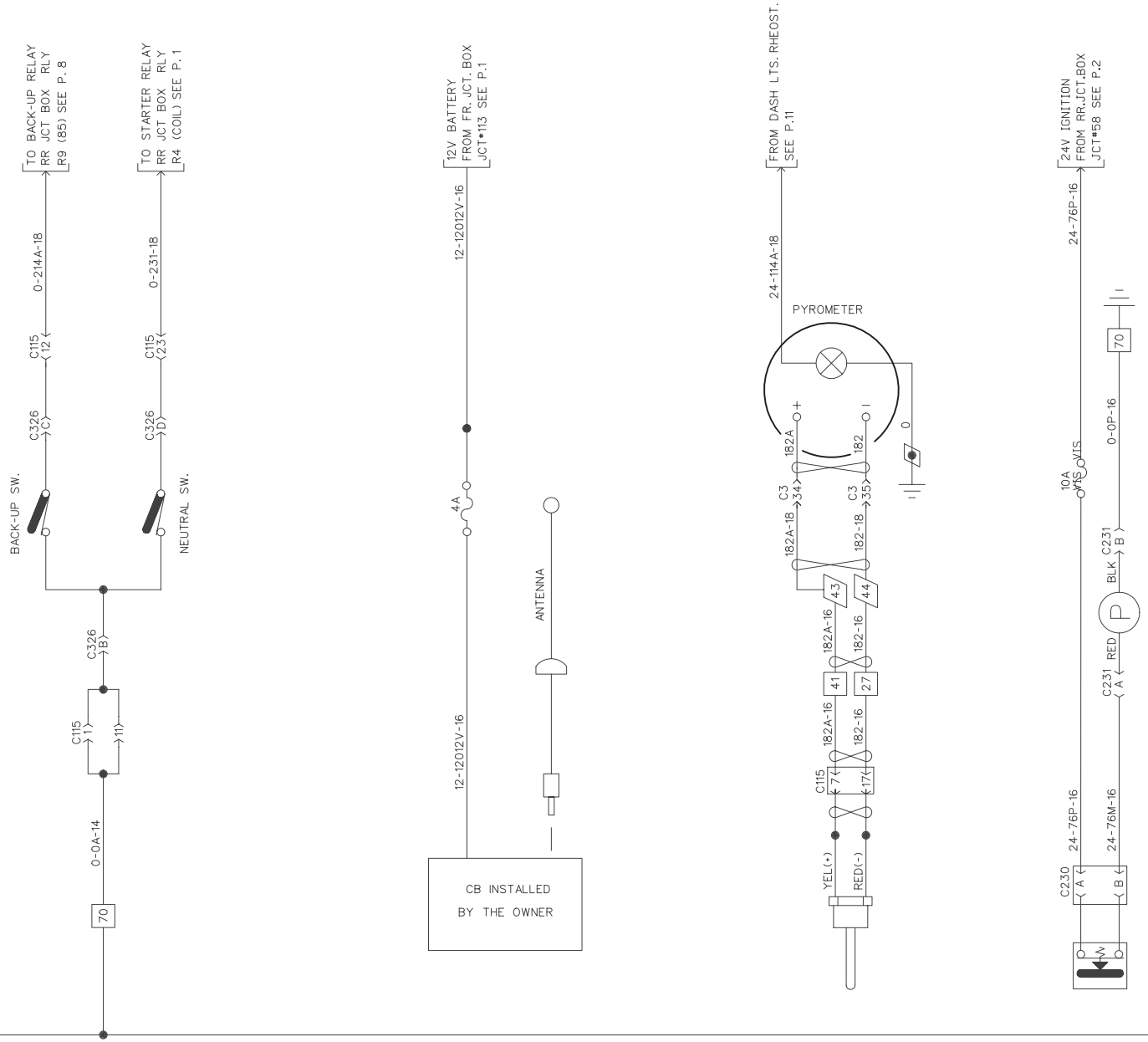

MANUAL TRANSMISSION | CB OPTION | PYROMETER | FUEL PRIME PUMP

PREVOST CAR inc.	WIRING DIAGRAM	NO: D060872	P. 25	REVISION 000

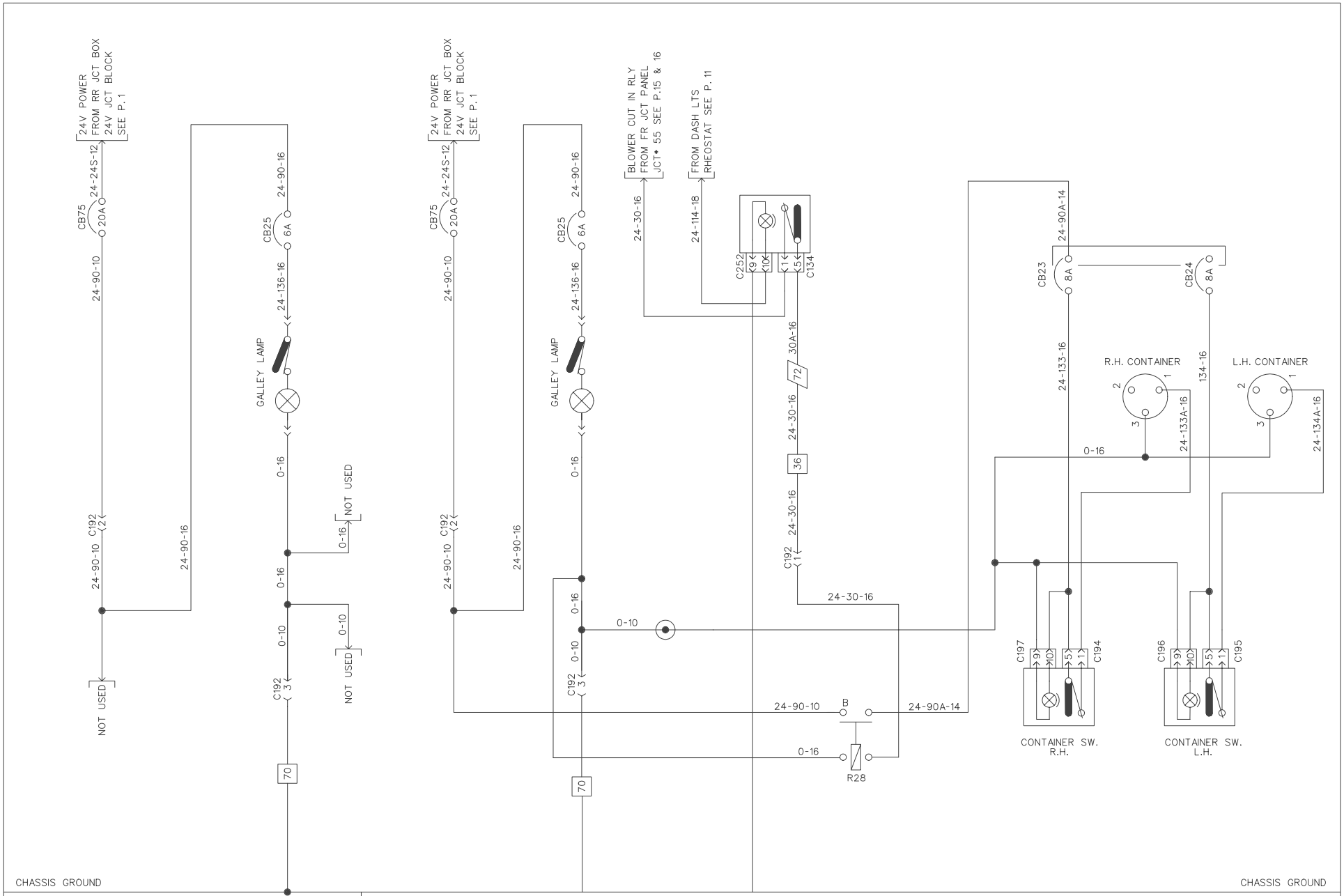

GALLEY "MINI CHEF 100"

GALLEY "MINI CHEF 200"

PREVOST CAR inc.	WIRING DIAGRAM	NO: D060872	P. 26	REVISION 000

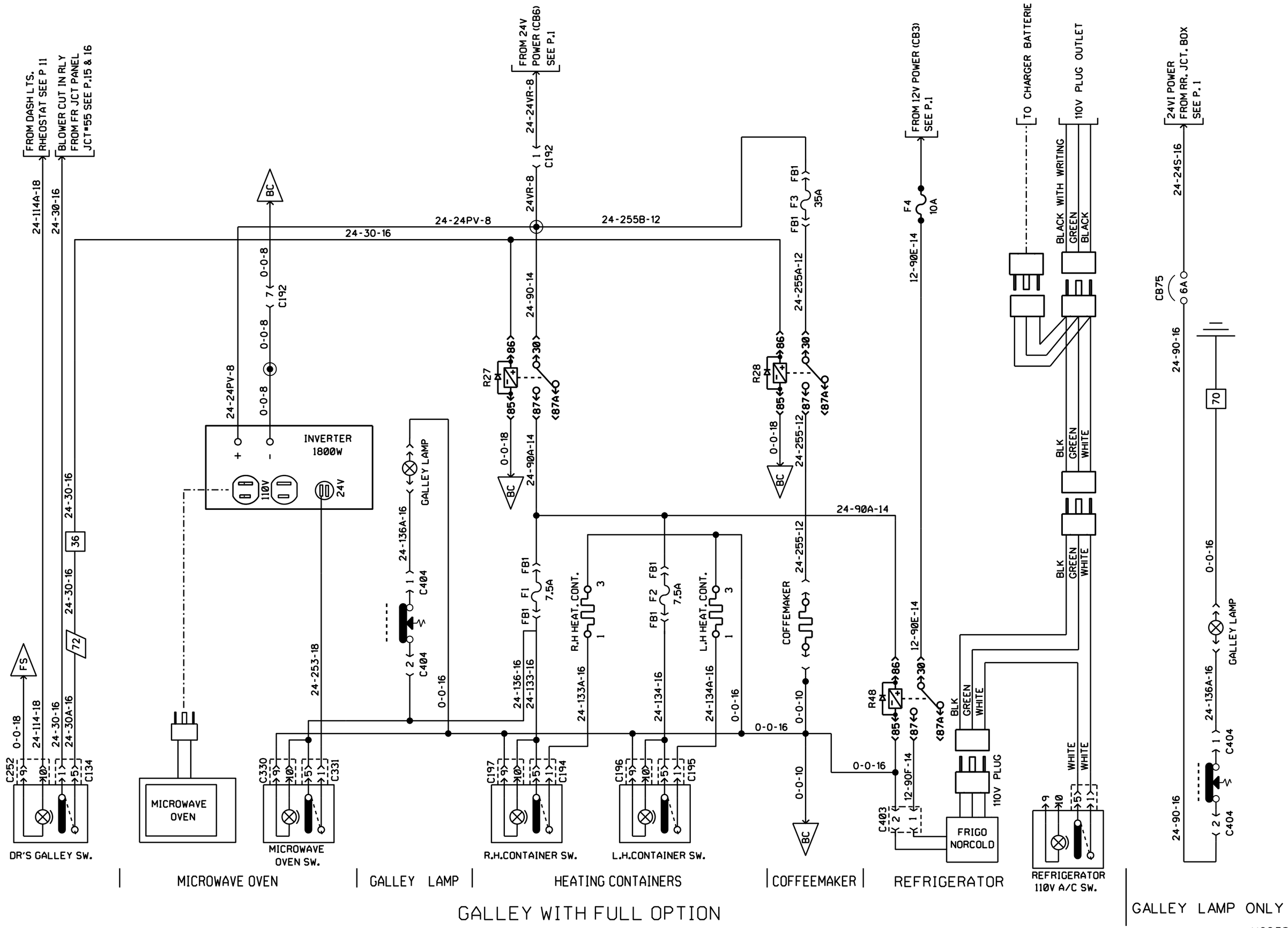

PREVOST	WIRING DIAGRAM	NO: D060872	PAGE: 26sp1	REVISION 00

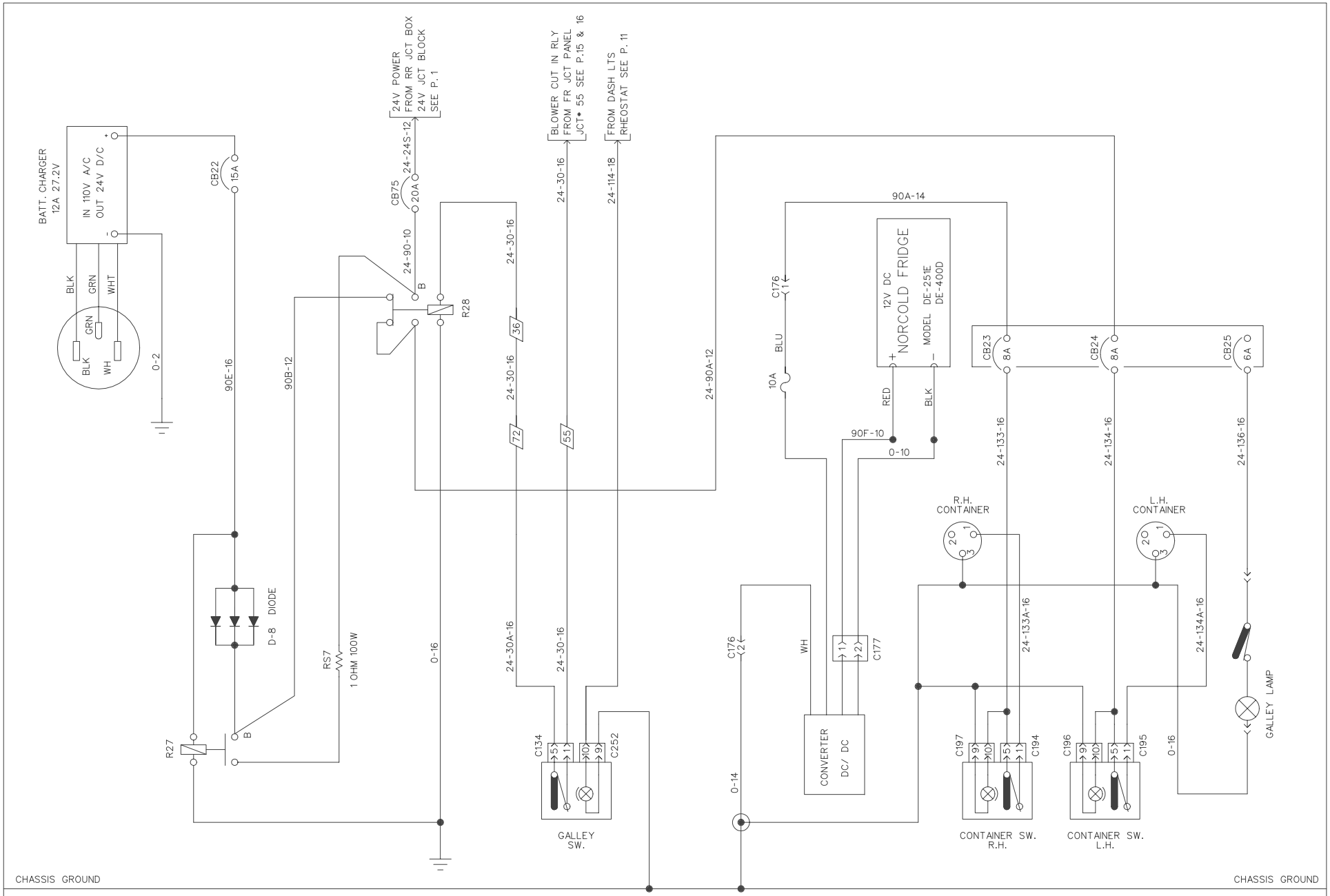

GALLEY "MINI-CHEF" NORCOLD REFRIGERATOR

PREVOST CAR inc.	WIRING DIAGRAM	NO: D060872	P. 27	REVISION 000

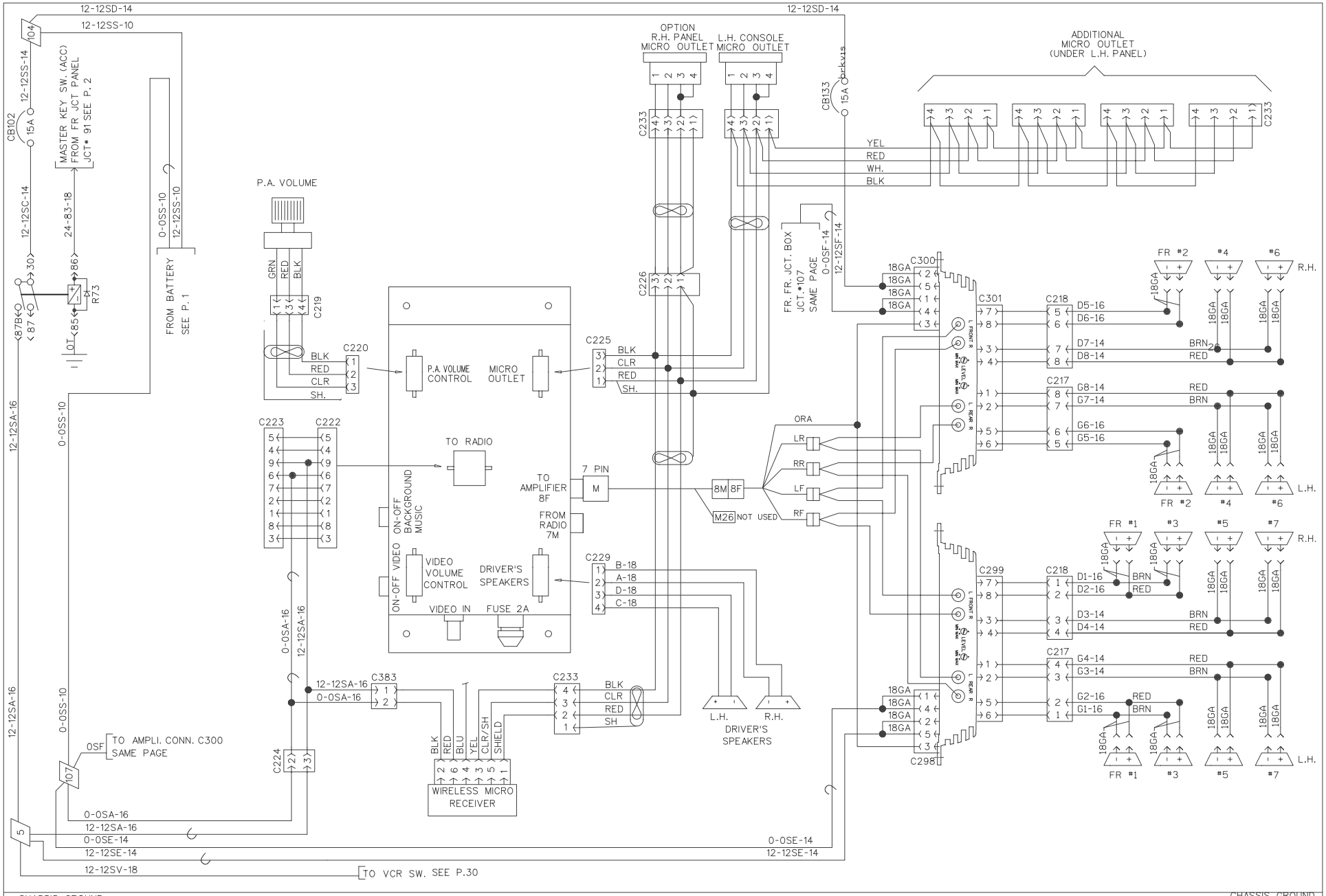

SOUND SYSTEM (P.A. ONLY)

PREVOST CAR inc.	WIRING DIAGRAM	NO: D060872	P. 28	REVISION 000

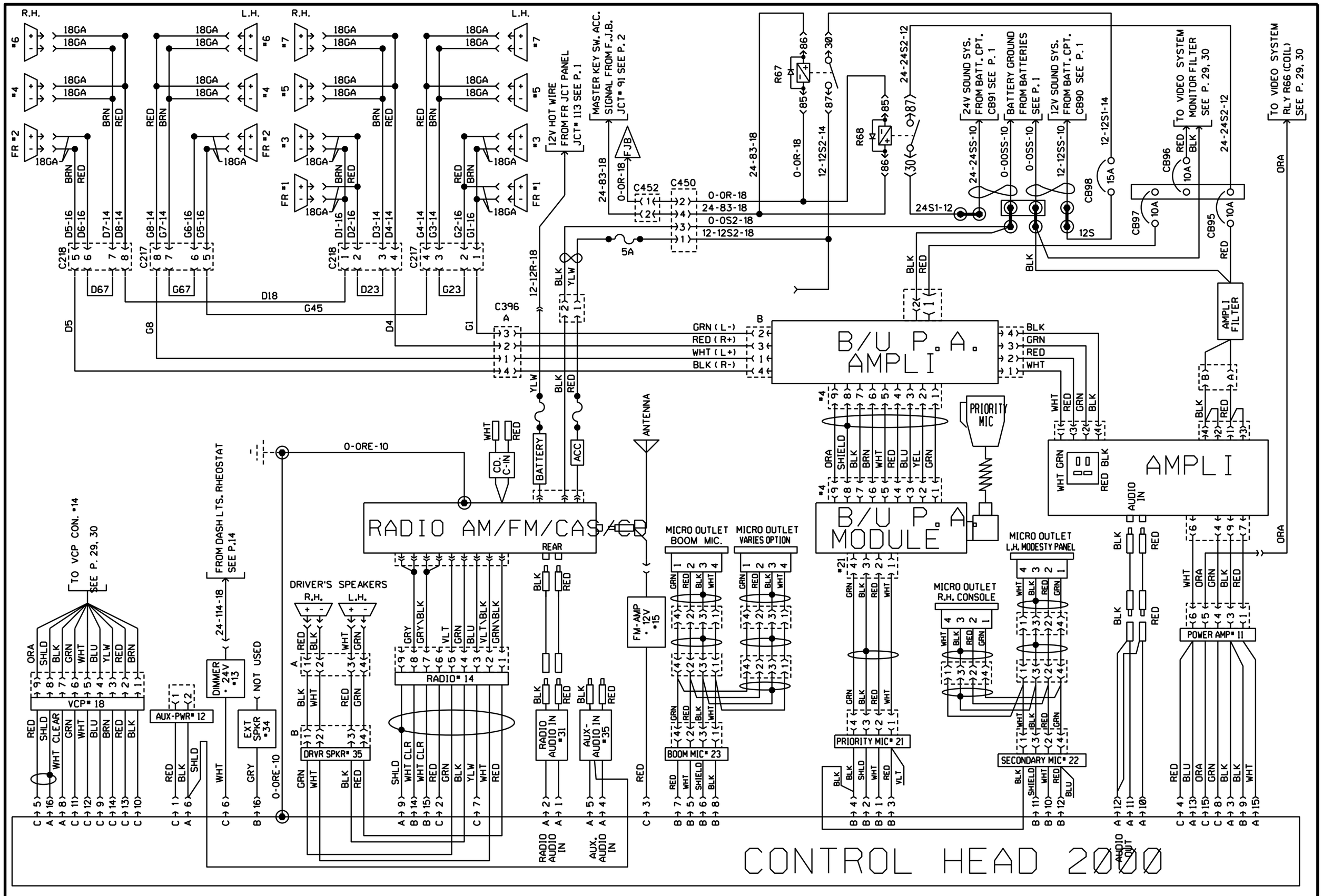

SOUND SYSTEM

PREVOST CAR inc.	WIRING DIAGRAM	NO: D060872	P. 28	REVISION 016

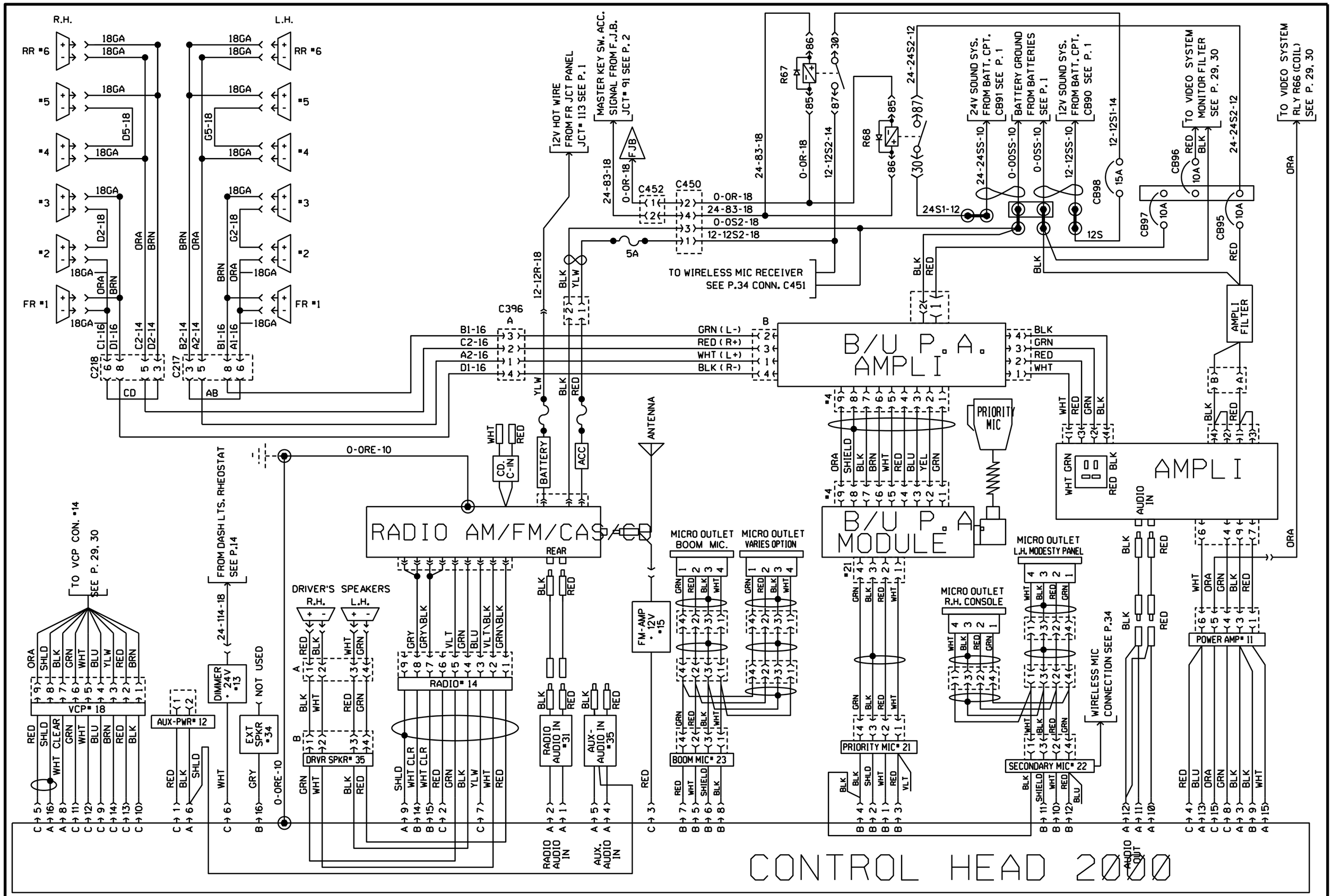

SOUND SYSTEM

PREVOST CAR inc.	WIRING DIAGRAM	NO: D060872	P. 28	REVISION 019

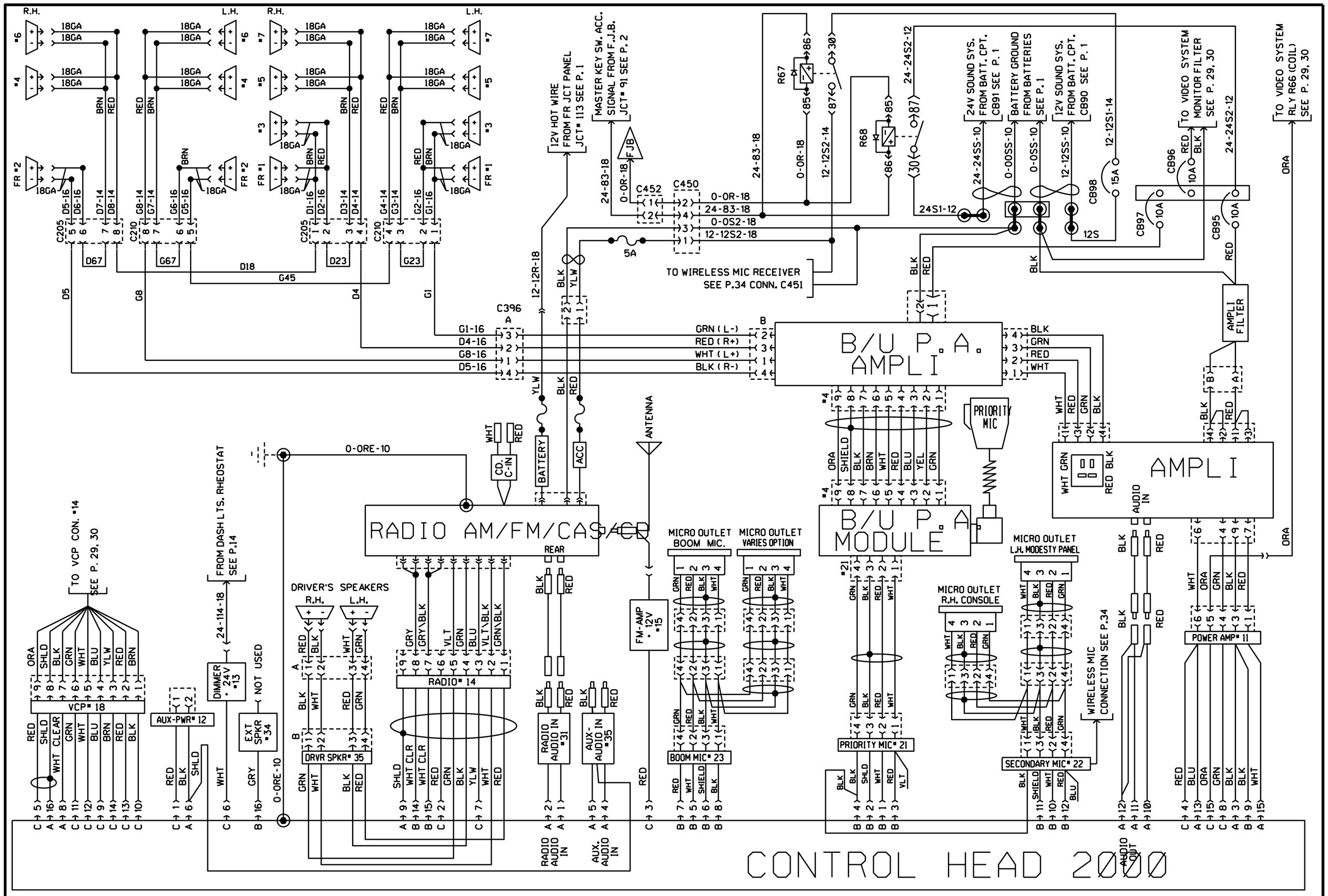

SOUND SYSTEM

PREVOST CAR inc.	WIRING DIAGRAM	NO: D060872	P. 28	REVISION 025

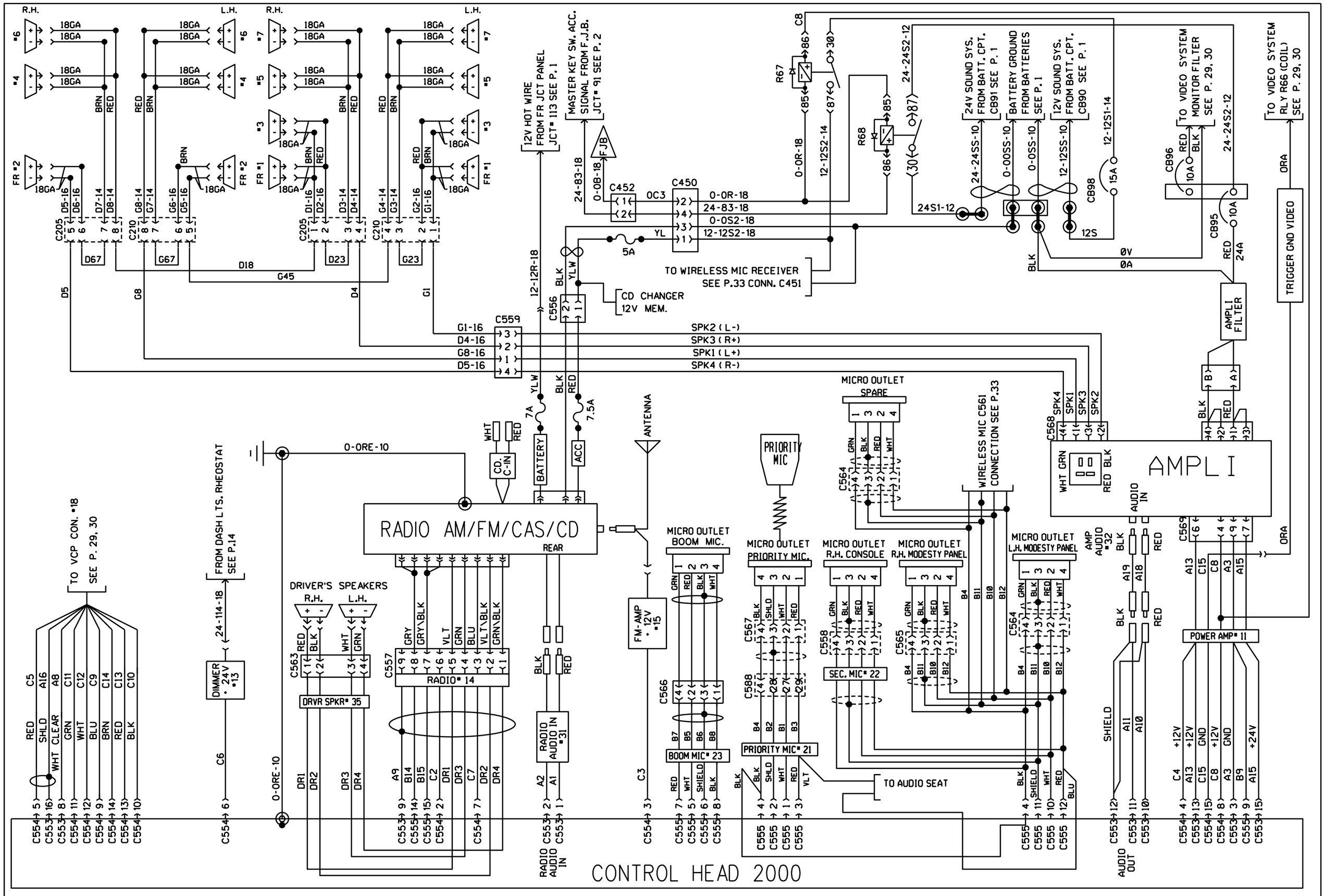

SOUND SYSTEM

PREVOST CAR inc.	WIRING DIAGRAM	NO: D060872	P. 28	REVISION 027

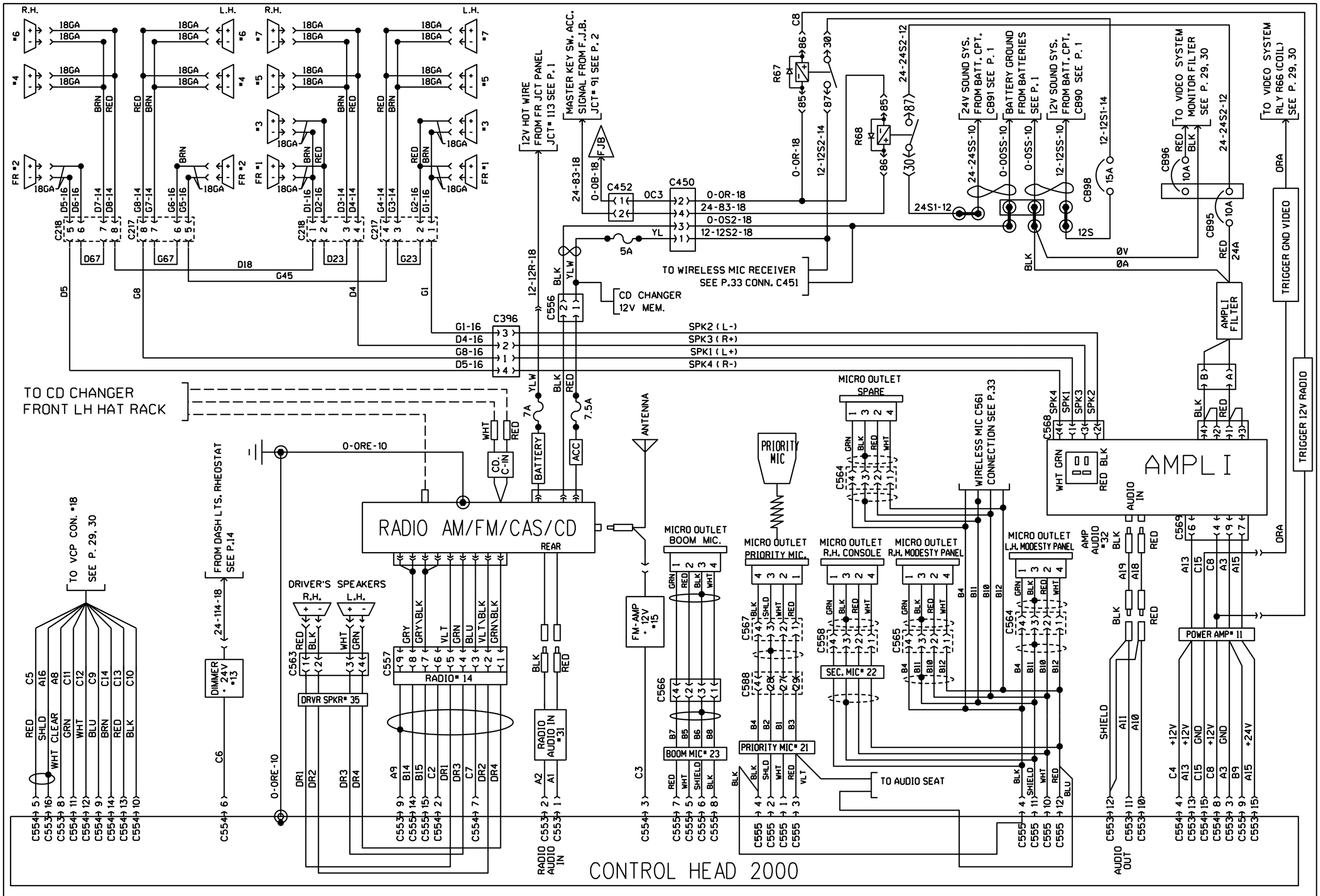

SOUND SYSTEM

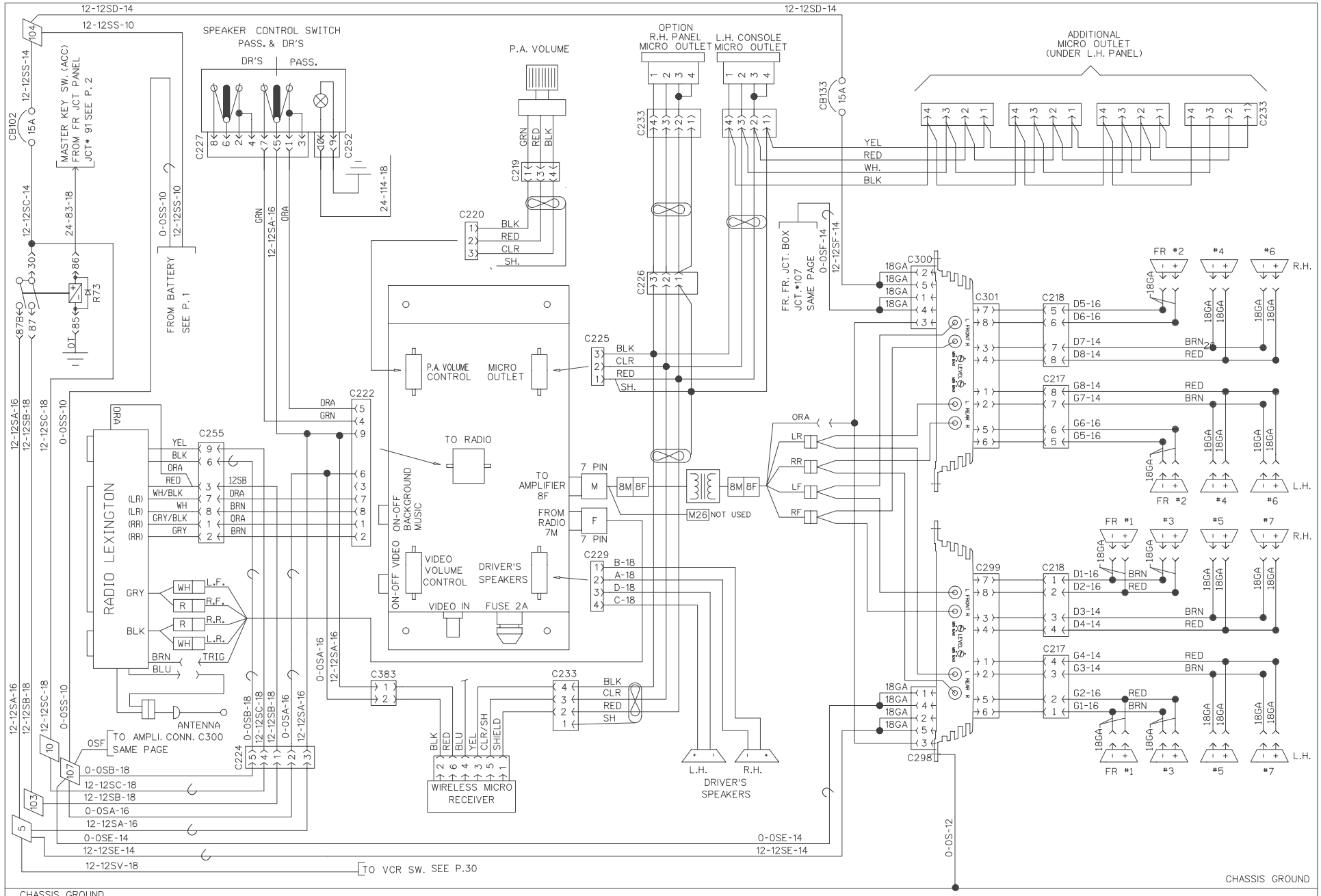

SOUND SYSTEM (RADIO & P.A.)

PREVOST CAR inc.	WIRING DIAGRAM	NO: D060872	P. 29	REVISION 000

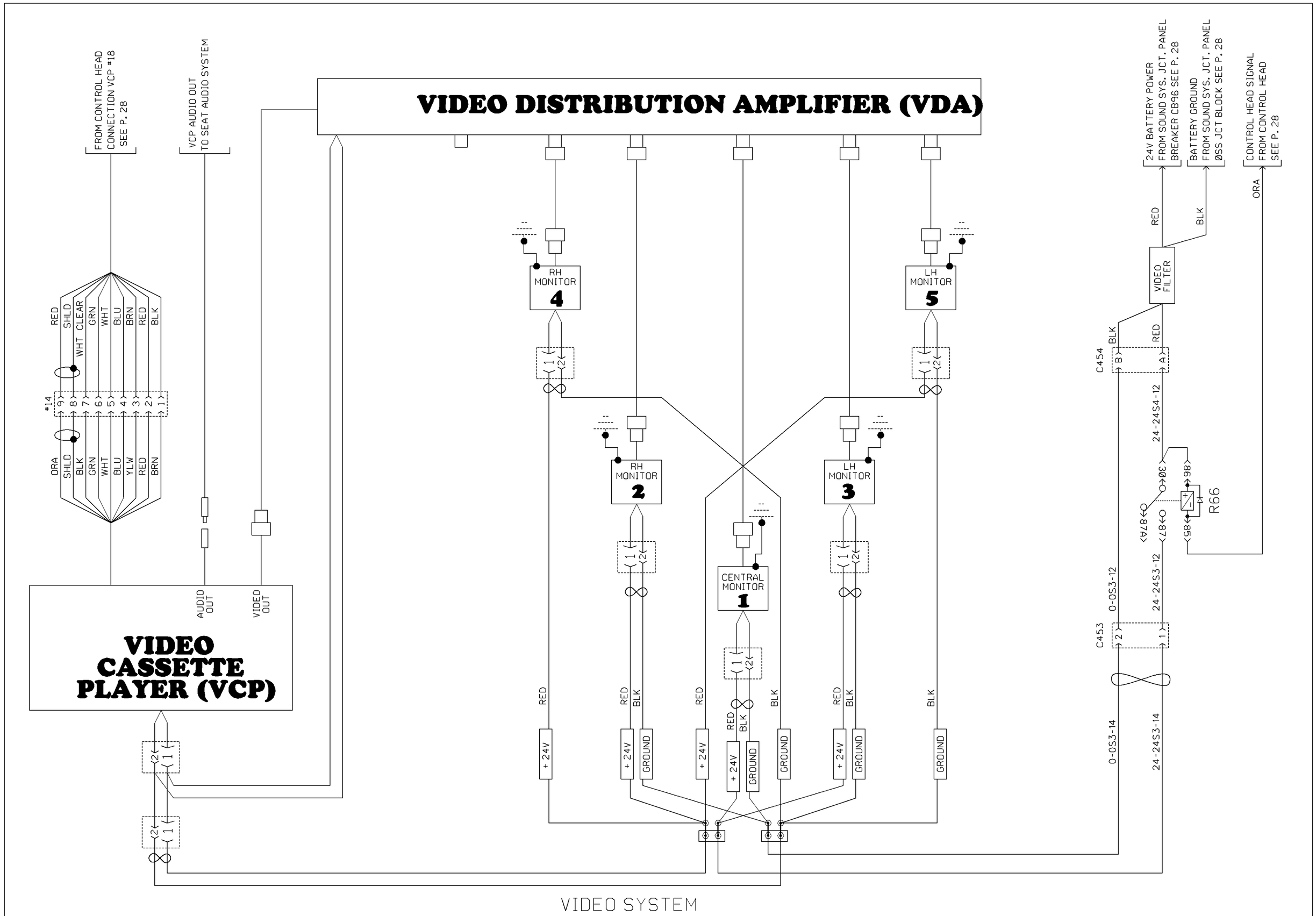

VIDEO SYSTEM

PREVOST CAR inc.	WIRING DIAGRAM	NO: D060872	P. 29	REVISION 010

VIDEO SYSTEM

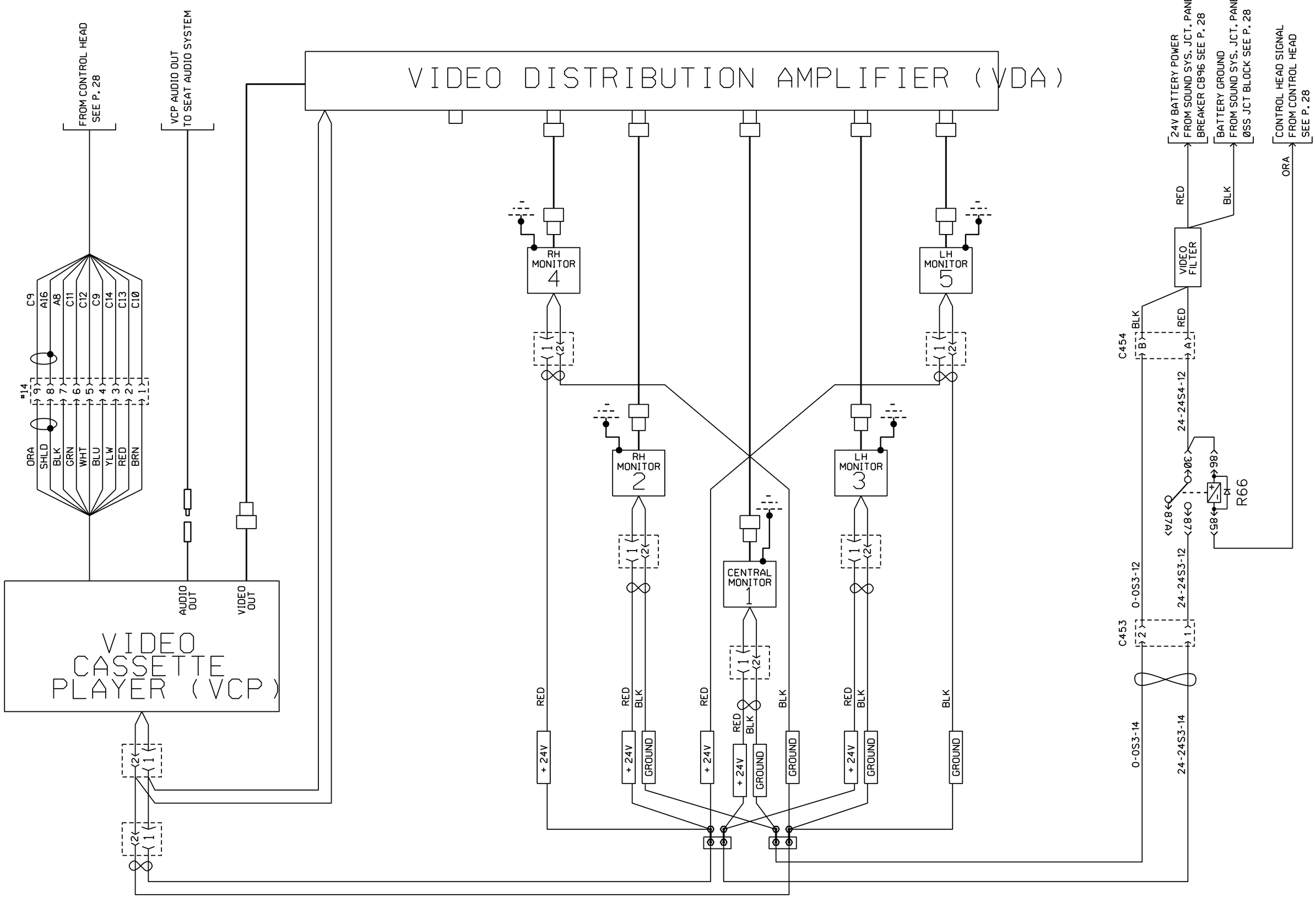

VIDEO SYSTEM

PREVOST CAR inc.	WIRING DIAGRAM	NO: D060872	P. 29	REVISION 027

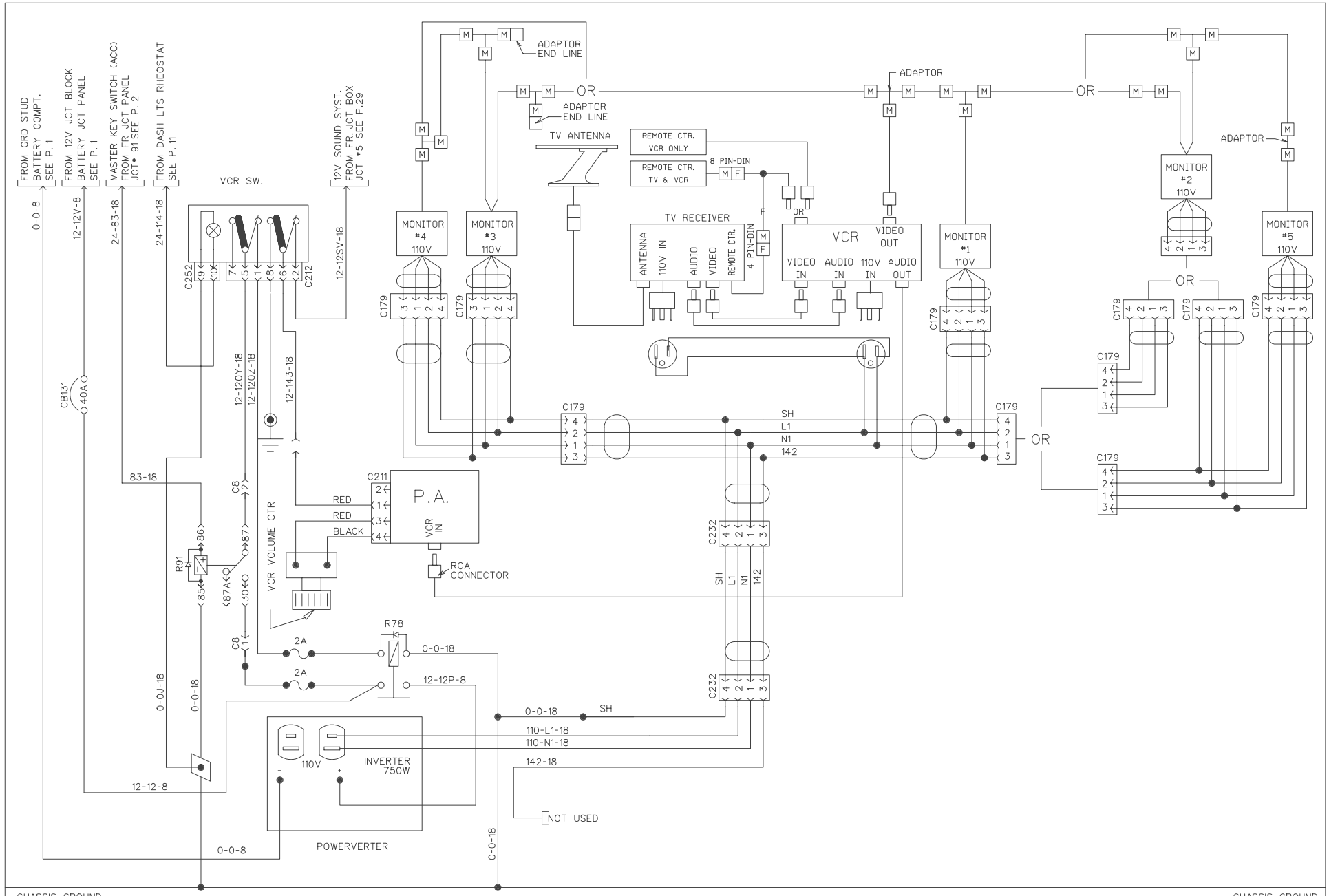

VIDEO SYSTEM & TV RECEIVER

PREVOST CAR inc.	WIRING DIAGRAM	NO: D060872	P. 30	REVISION 000

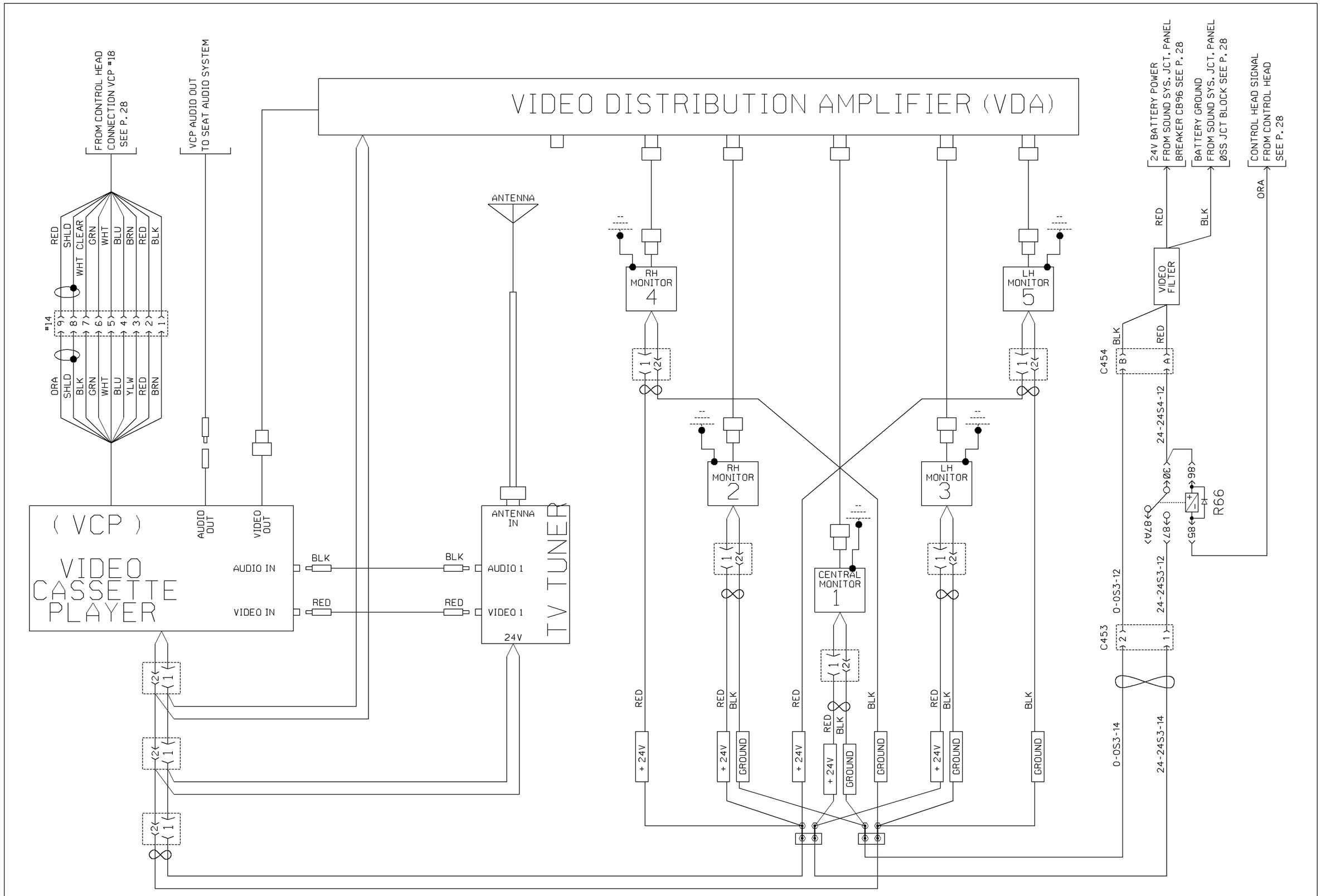

VIDEO SYSTEM & TV RECEIVER

PREVOST CAR inc.	WIRING DIAGRAM	NO: D060872	P. 30	REVISION 010

VIDEO SYSTEM & TV RECEIVER

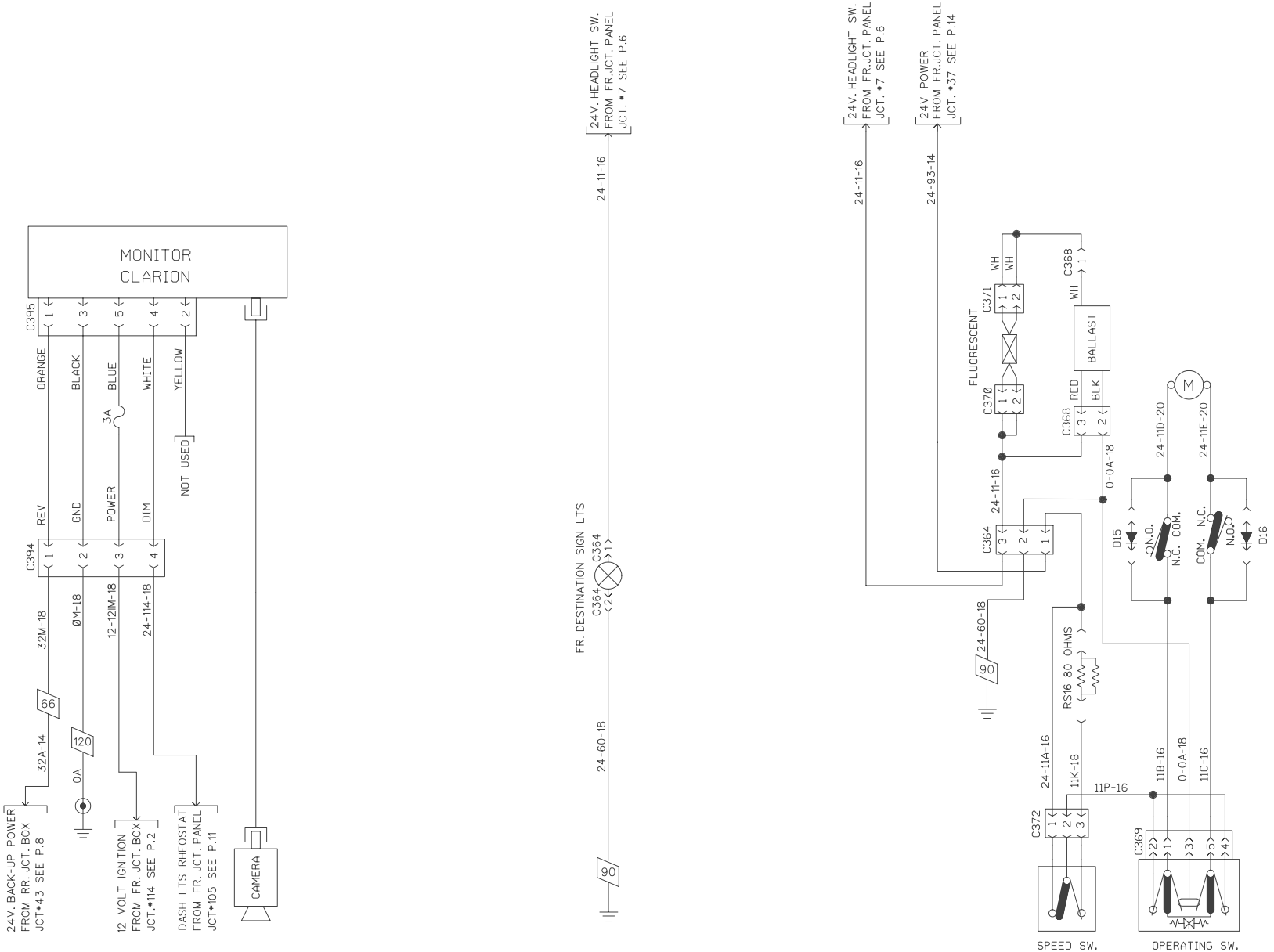

BACK-UP MONITOR (CLARION) | FRONT DESTINATION SIGN (MANUAL) | FRONT DESTINATION SIGN (ELECTRICAL)

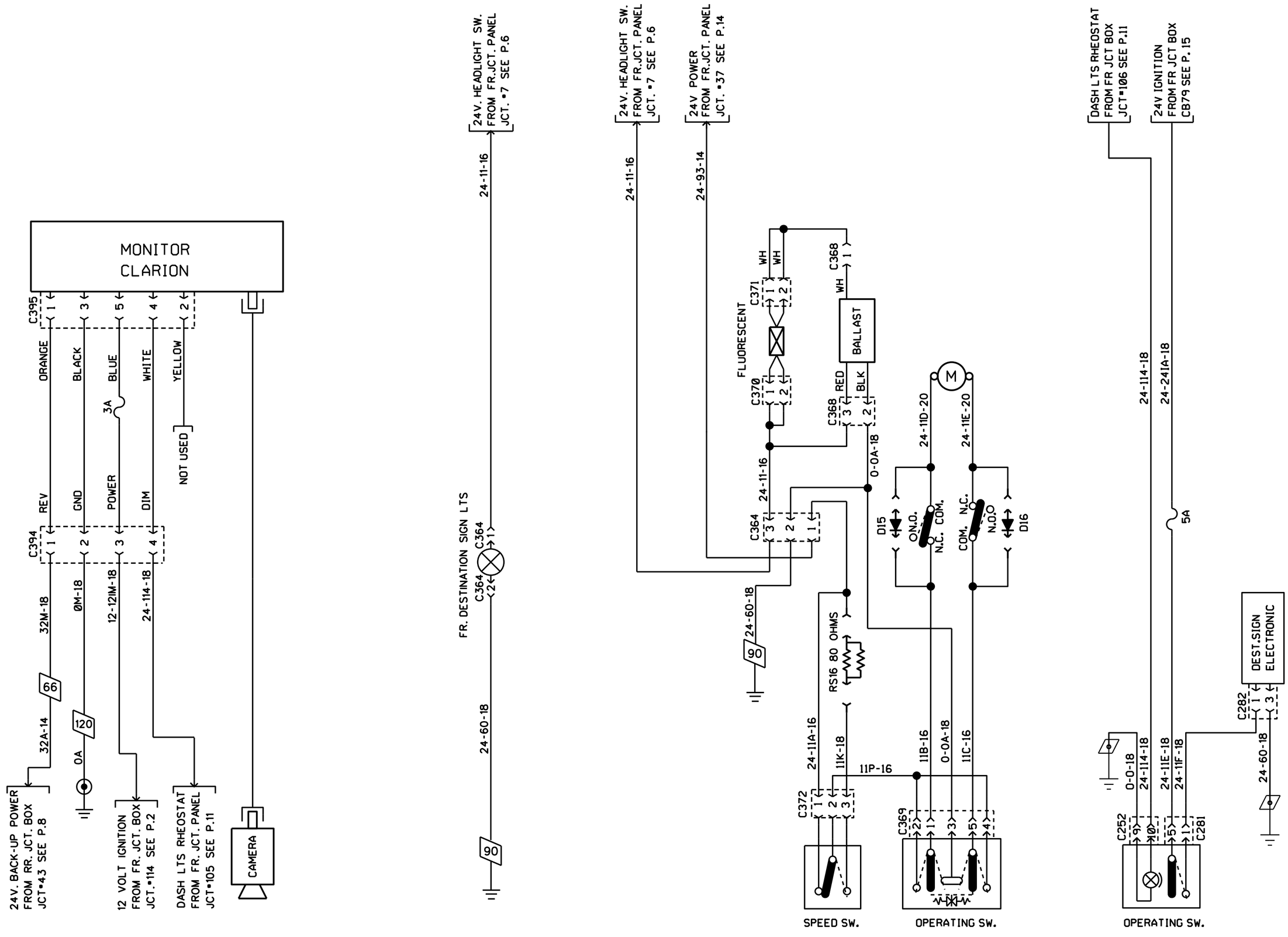

BACK-UP MONITOR (CLARION) | FRONT DESTINATION SIGN (MANUAL) | FRONT DESTINATION SIGN (ELECTRICAL) | FRONT DEST. SIGN (ELECTRONIC)

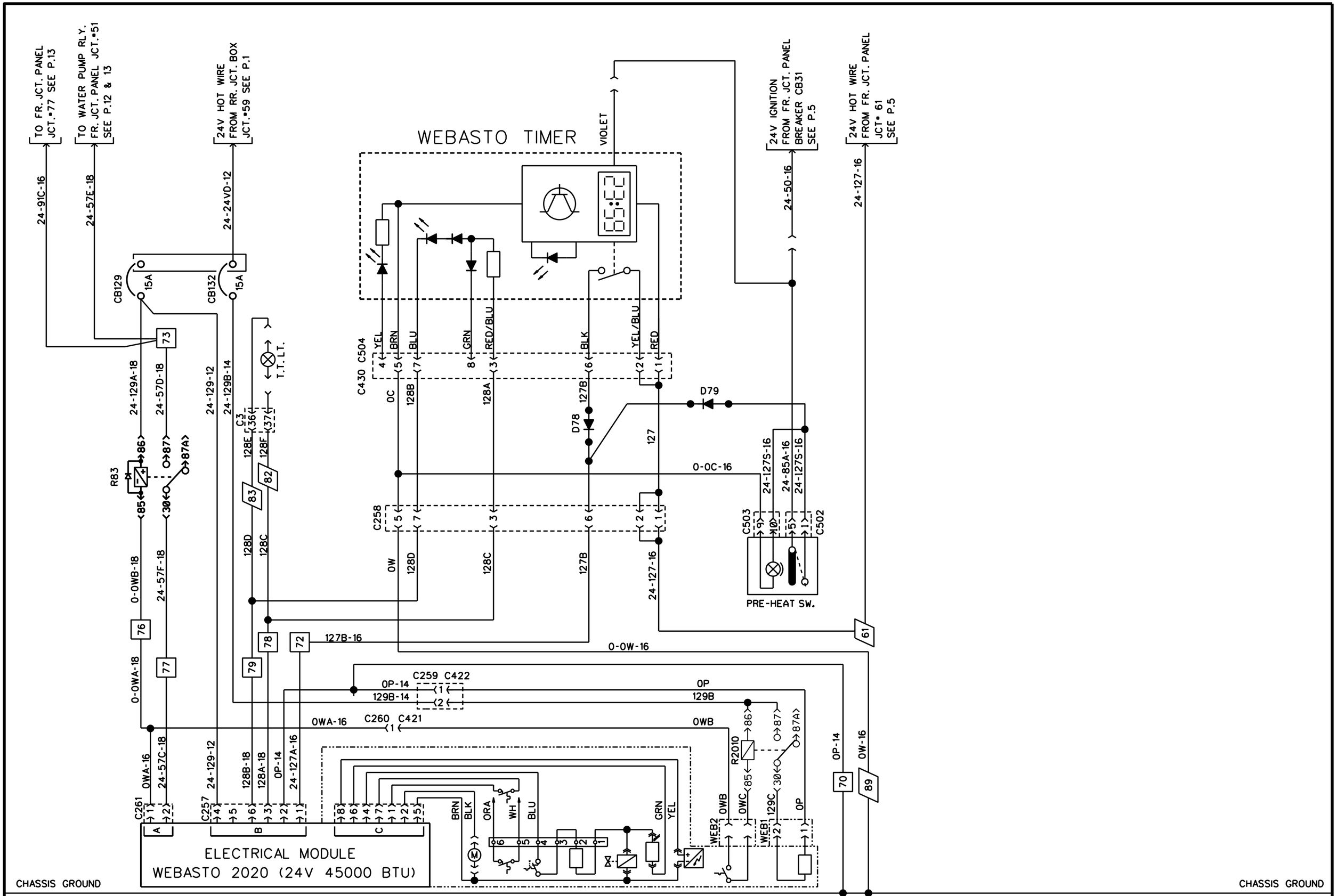

PRE-HEAT WATER HEATER WEBASTO 2020

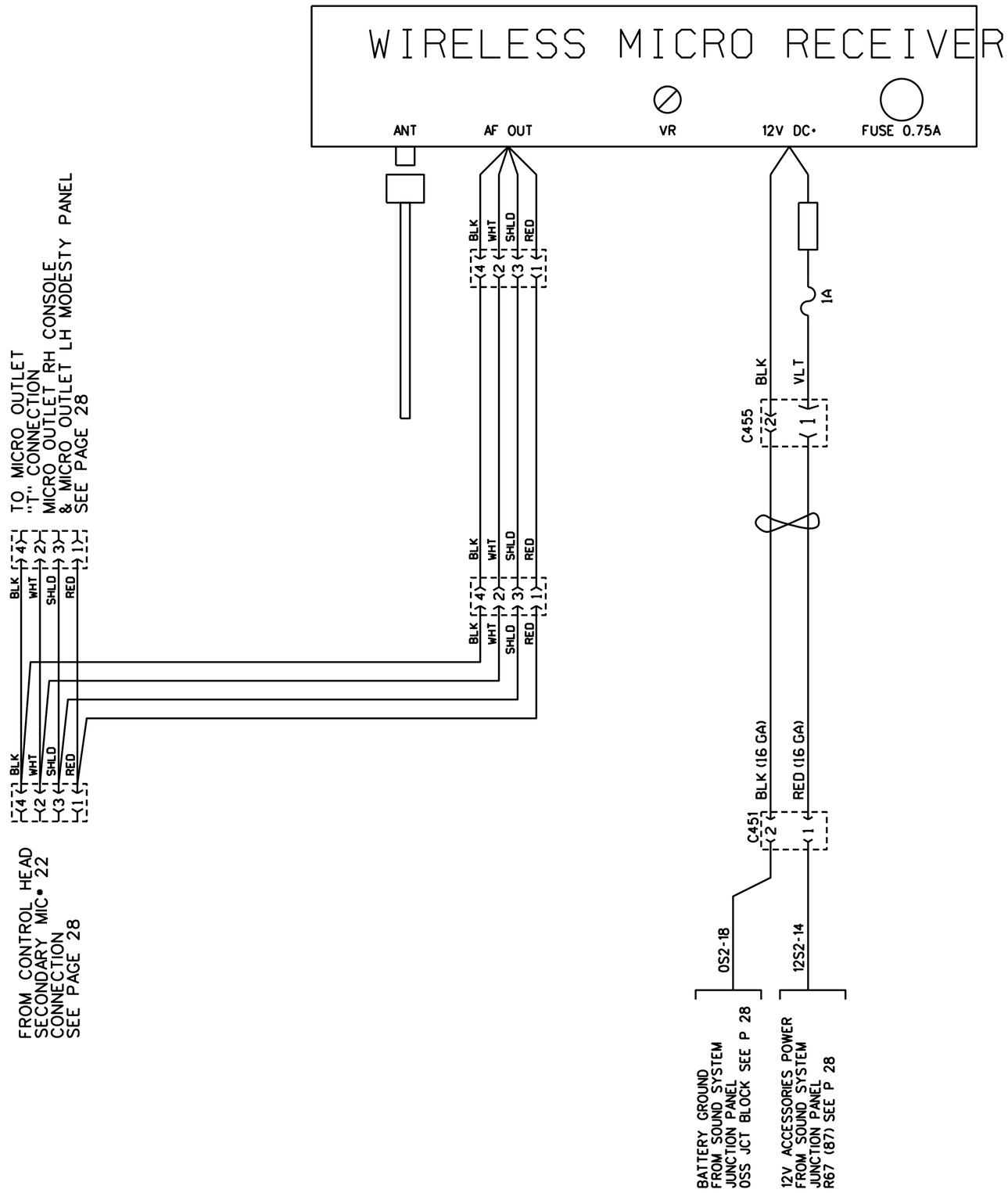

WIRELESS MICROPHONE

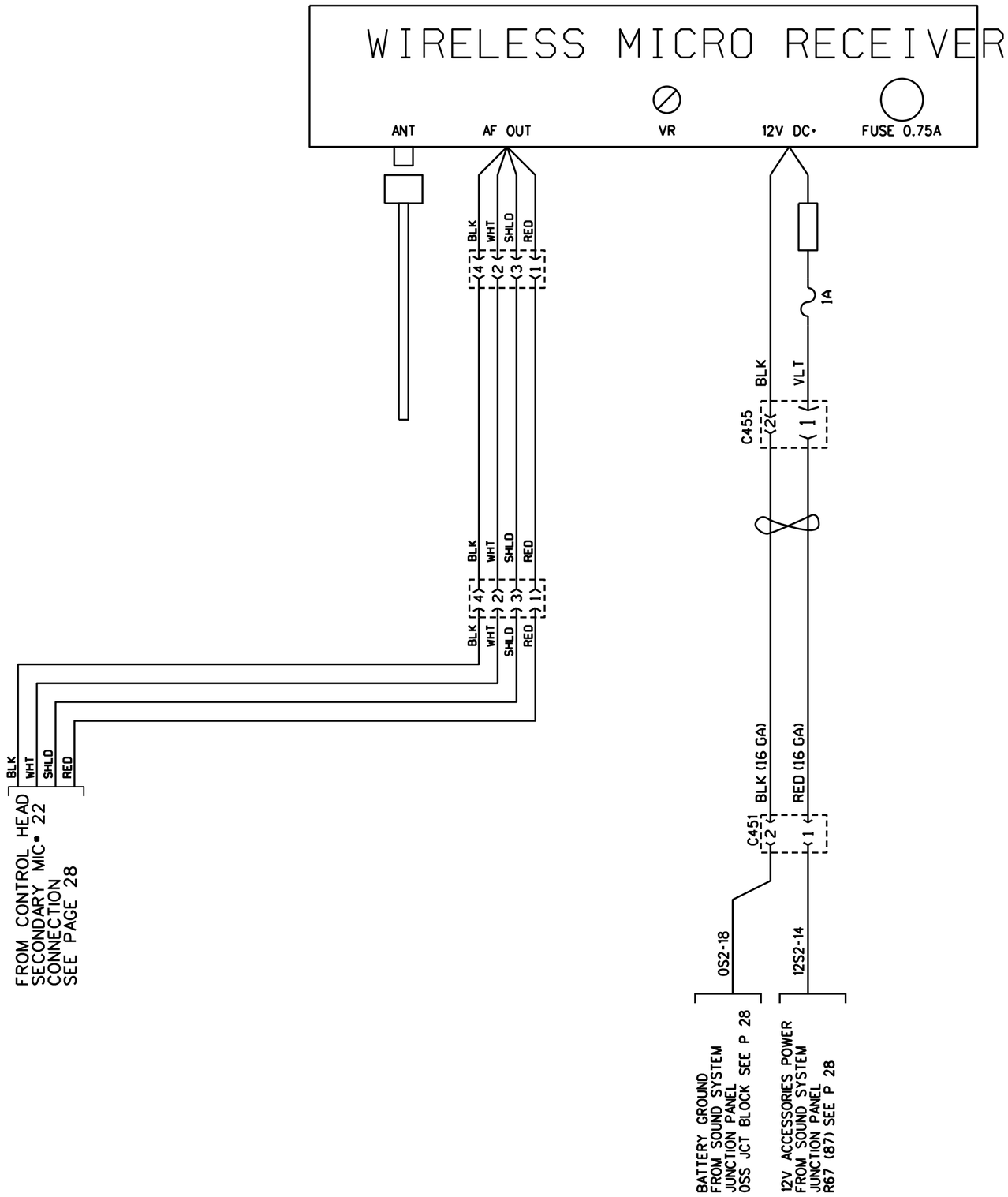

WIRELESS MICROPHONE

Controle porte XL

W-6351, 56, 63, 67, 71, 75, 79.

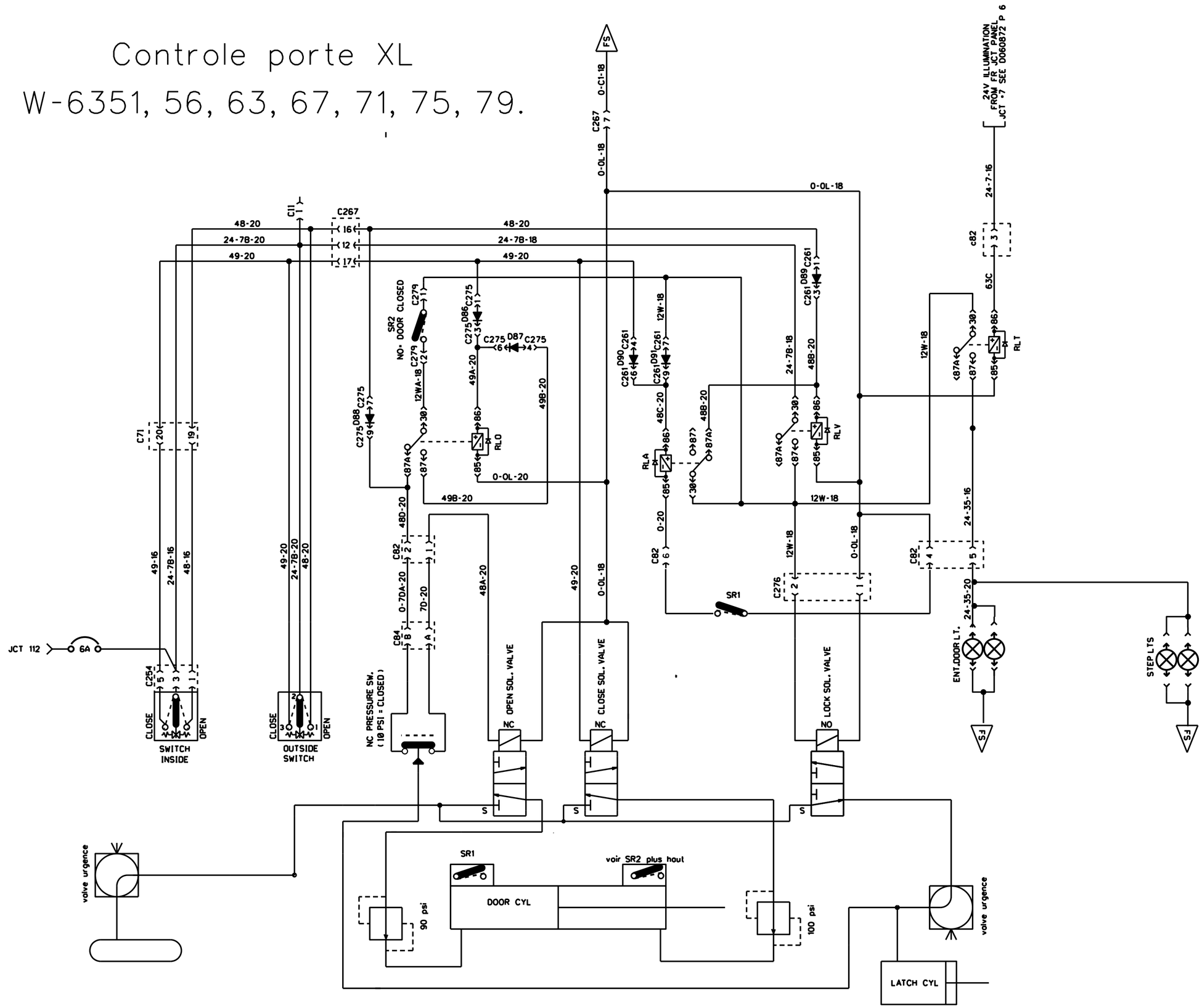

PREVOST CAR inc.	WIRING DIAGRAM	NO: D060872	P.35SP1	REVISION 00

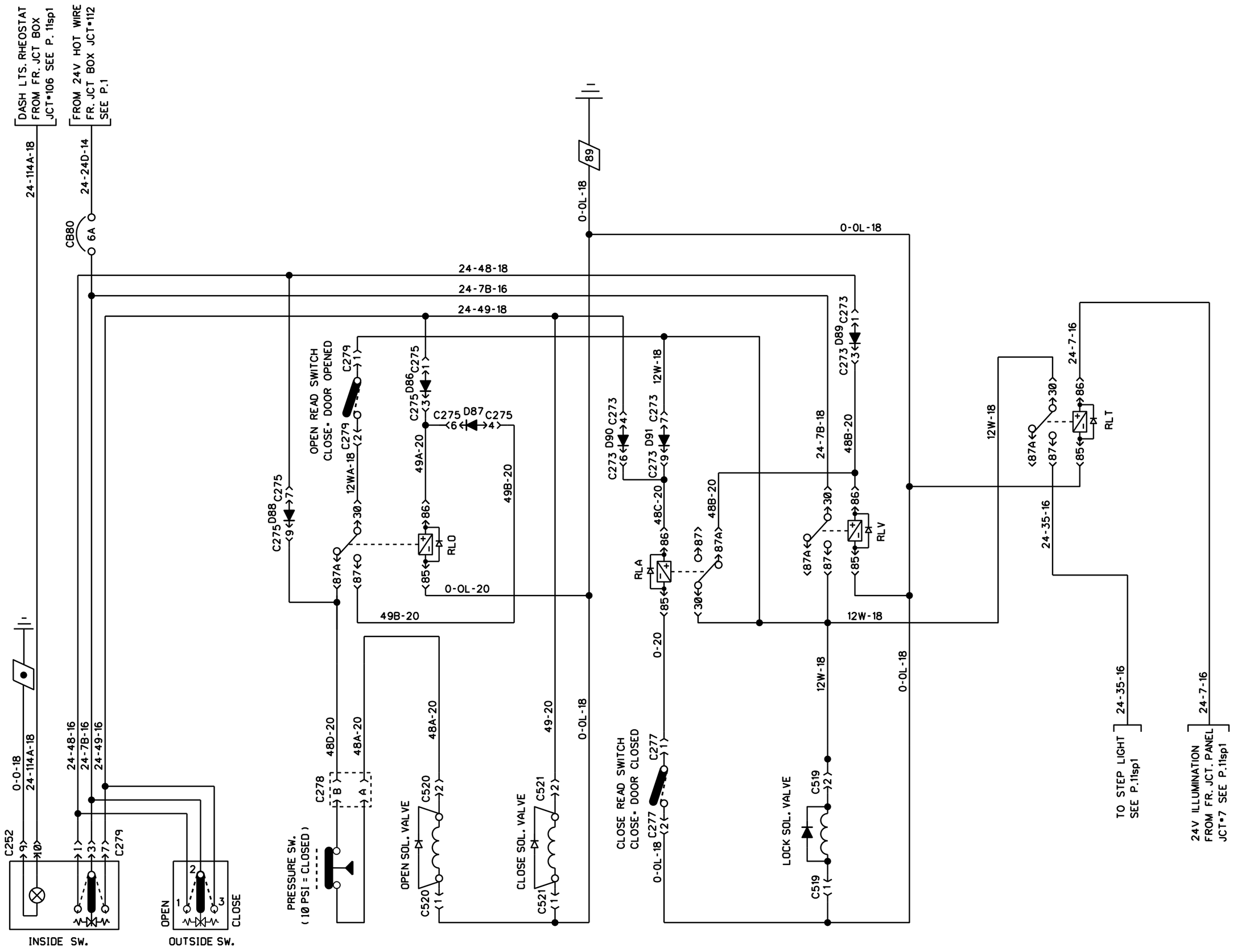

ENTRANCE DOOR (SEDAN)

PREVOST	WIRING DIAGRAM	NO: D060872	PAGE: 36 sp1	REVISION 00